Total No. of Questions : 8]

SEAT No. :

P-6478

[Total No. of Pages : 2

[6181]-11

B.E. (Automobile Engineering)

AUTOMOTIVE TESTING AND CERTIFICATION

(2019 Pattern) (Semester - VII) (416481)

Time : 2½ Hours] *[Max. Marks : 70*

Instructions to the candidates:

1) ***Answer Q1 or Q2, Q3 or Q4, Q5 or Q6, Q7 or Q8.***
2) ***Neat diagrams must be drawn wherever necessary.***
3) ***Figures to the right side indicate full marks.***
4) ***Assume Suitable data, if necessary.***

Q1) a) Explain the test procedure of Pass by noise test and noise limits for various vehicle categories. **[9]**

b) Explain the following. **[9]**

i) Split-mu track

ii) External noise track

iii) Steering pad

OR

Q2) a) Explain Turning circle diameter test with figures. **[9]**

b) Explain free acceleration test as per IS standard. **[9]**

Q3) a) Explain Indian Driving Cycle in detail. **[8]**

b) Explain procedure of two wheeler testing on chassis dynamometer for emissions. **[9]**

OR

Q4) a) What is meant by Real Drive Emission (RDE) Testing? How does RDE test work in practice? What are the different equipment's used for RDE Test? **[8]**

b) Explain Evaporative Emission Test as per IS standard. **[9]**

P.T.O.

Q5) a) Define and differentiate Sound Pressure, Sound Intensity & Sound Power levels and write the relationship between them. **[8]**

b) Explain Transmission noise and its measurement methods. **[9]**

OR

Q6) a) What are the different sources of noise and vibration in vehicle? Explain mechanism of noise generation? **[8]**

b) Explain Briefly **[9]**

i) Exhaust Noise

ii) Engine Noise

iii) Vehicle structure noise

Q7) a) Explain the procedure for Steering Impact test. **[9]**

b) What are the different types of tests performed on rear view mirrors? Explain any one. **[9]**

OR

Q8) a) Explain Demist and Defrost Test. **[9]**

b) Explain the procedure for Horn Testing. **[9]**

Total No. of Questions : 8]

SEAT No. :

P-6479

[Total No. of Pages : 3

[6181]-12

B.E. (Automobile Engineering)

MACHINE & VEHICLE DYNAMICS

(2019 Pattern) (Semester - VII) (416482)

Time : 2½ Hours] ***[Max. Marks : 70***

Instructions to the candidates:

1) ***Answer Q1 or Q2, Q3 or Q4, Q5 or Q6, Q7 or Q8.***
2) ***Neat diagrams must be drawn wherever necessary.***
3) ***Figures to the right side indicate full marks.***
4) ***Use of Logarithmic tables, slide rule, electroinc pocket calculator is allowed.***
5) ***Assume suitable data if necessary.***

Q1) a) Derive the differential equation of motion for forced vibration in spring damper mass system. **[6]**

b) In a vibratory system, a mass of 3 kg is suspended by a spring of stiffness 1200 N/m and it is subjected to harmonic excitation of 20 N. If the viscous damper is provided with the damping coefficient of 75 N-s/m, determine : **[12]**

i) The resonance frequency

ii) The phase angle at resonance

iii) The amplitude at resonance

iv) The frequency corresponding to peak amplitude

v) The damped frequency

OR

Q2) a) Explain : **[8]**

i) Forced Vibrations

ii) Resonance

iii) Quality Factor of the vibratory system

iv) Bandwidth of the vibratory system

P.T.O.

b) The rotating machine, having total mass of 20 kg, is having an eccentric mass of 1.5 kg with eccentricity of 25 mm. The machine rotates at 720 r.p.m. If the amplitude of vibrations, which is 20 mm, lags the eccentric mass by 90°, determine : **[10]**

i) The natural circular frequency of the system;

ii) The damping factor; and

iii) The amplitude and phase angle when eccentric mass rotates at 1440 r.p.m

Q3) a) Explain earth fixed coordinate system and vehicle coordinate system with neat diagram. **[9]**

b) Explain : **[8]**

i) Gradability

ii) Drawbar pull

iii) Rolling resistance

iv) Tractive effort

OR

Q4) a) Derive the equation for normal reactions acting on axles of a vehicle, when vehicle is on a slope and in rest state. **[7]**

b) Explain the different cases of dynamic axle loading with neat diagram and mathematical equations. **[10]**

Q5) a) Explain automatic transmission with respect to torque versus speed ratio. **[7]**

b) Explain engine power limited acceleration. **[10]**

OR

Q6) a) A car weighing 2000 kg travelling at a speed of 40 km/hr. The driver puts on the brakes with a steady brake force or 9000 N, when he sees a stop sign. Determine, the : **[12]**

i) Deceleration of the car.

ii) Stopping distance of the car.

iii) Time to stop the car.

iv) Energy dissipated during braking.

v) Brake power dissipated at point of brake application.

vi) Brake power dissipated average at the stop.

Neglect, aerodynamic, rolling and drawbar pull resistances.

b) Derive the generalized equation for braking performance of a vehicle on slope. **[5]**

Q7) a) Explain mathematical model of handling. **[9]**

b) Explain : **[9]**

i) Yaw velocity

ii) Neutral steer

iii) Constant speed test

OR

Q8) Write short note on : **[18]**

a) Semi-active suspension system

b) Active suspension system.

c) Excitation sources For vehicle ride model.

□□□

Total No. of Questions : 8]

SEAT No. :

P-6480

[Total No. of Pages : 2

[6181]-13
B.E. (Automobile)
INDUSTRIAL ENGINEERING
(2019 Pattern) (Semester-VII) (416483)

Time : 2 Hours] ***[Max. Marks : 50***

Instructions to the candidates :

1) ***Answer Q1 or Q2, Q3 or Q4, Q5 or Q6, Q7 or Q8.***
2) ***Neat diagrams must be drawn wherever necessary.***
3) ***Figures to the right side indicate full marks.***
4) ***Assume Suitable data if necessary.***

Q1) a) Explain Productivity Improvement Techniques. **[6]**

b) Write in details functions of an industrial engineer. **[7]**

OR

Q2) a) Define Productivity and explain following productivity measures. **[7]**

i) Partial Productivity Measures

ii) Total Productivity Measures

iii) Total Factor Productivity Measure

b) The following information regarding output produced and inputs consumed for a particular period of time for a company given below.**[6]**

i) Output = Rs. 10000/-

ii) Human Input = Rs. 3000/-

iii) Material Input = Rs. 2000/-

iv) Capital Input = Rs. 3000/-

v) Energy Input = Rs. 1000/-

vi) Other Miscellaneous Input = Rs. 500/-

Calculate Total Productivity and Total Factor Productivity.

P.T.O.

Q3) a) Explain various method study symbols for recording facts. **[6]**

b) Explain Operation Process Chart. **[6]**

OR

Q4) a) What are Therbligs? Write any 5 with symbols. **[6]**

b) Explain Flow Process Chart. **[6]**

Q5) a) Explain in detail factors affecting selection of location for the industrial plant. **[7]**

b) Write a short note on Material Handling Equipment. **[6]**

OR

Q6) a) Explain Objectives of Plant Layout. **[7]**

b) Explain relationship between Layout and Material Handling. **[6]**

Q7) a) Explain Aggregate Planning. **[6]**

b) Explain MRP I and MRP II. **[6]**

OR

Q8) a) Explain functions of PPC. **[6]**

b) Write a short note on ABC Analysis. **[6]**

Total No. of Questions : 8]

SEAT No. :

P-6481

[Total No. of Pages : 2

[6181]-14

B.E. (Automobile Engineering)

ARTIFICIAL INTELLIGENCE & MACHINE LEARNING

(2019 Pattern) (Semester - VII) (416484A) (Elective - III)

Time : 2½ Hours] *[Max. Marks : 70*

Instructions to the candidates:

1) ***Answer Q1 or Q2, Q3 or Q4, Q5 or Q6, Q7 or Q8.***
2) ***Neat diagrams must be drawn wherever necessary.***
3) ***Figures to the right side indicate full marks.***
4) ***Use of calculator is allowed.***
5) ***Assume suitable data wherever necessary.***

Q1) a) How does decision tree algorithm used for classification? **[6]**

b) Explain the steps in K-means clustering. **[5]**

c) What is logistic regression? Explain the sigmoid function with neat sketch. **[6]**

OR

Q2) a) What is SVM? How does it work? **[6]**

b) Explain techniques to avoid over-fitting in decision tree. **[5]**

c) Explain following terms : **[6]**

i) MAE

ii) MSE

iii) RMSE

Q3) a) Explain different hyper-parameter tuning parameters in decision free. **[8]**

b) Explain 5-fold cross validation in detail. **[6]**

c) The total count of the students for AIML subject is 80 consisting 40 boys and 40 girls. 30 of the boys are majoring in AIML, as are 20 of the girls. If you pick up AIML major at random. **[4]**

i) What is the probability that the student is boy?

ii) What is the probability that the student is girl?

P.T.O.

OR

Q4) a) What is decision tree? What are the advantages and disadvantages of decision tree. **[8]**

b) What is data visualization? Describe any four data visualization techniques. **[6]**

c) Explain types of SVM with neat sketches. **[4]**

Q5) a) Explain the architecture of CNN? Also explain striding and padding in CNN. **[8]**

b) Elaborate the building blocks of deep networks. **[6]**

c) Differentiate between Machine learning & Deep learning. **[4]**

OR

Q6) a) What is reinforcement learning? Explain algorithms of RL in detail. **[8]**

b) Explain the architecture of Artificial Neural Network. **[6]**

c) State the different activation functions. **[4]**

Q7) a) State the significance of computer vision in automotive industry by describing one example. **[6]**

b) Explain the role of AIML in EVs. **[5]**

c) How machine learning is used in autonomous driving? Describe in detail. **[6]**

OR

Q8) a) What is predictive maintenance of vehicles? What is role of AI&ML in it? **[6]**

b) Explain AIML based route optimization. **[5]**

c) Explain role of AI&ML in connected Vehicles. **[6]**



Total No. of Questions : 8]

SEAT No. :

P-6482

[Total No. of Pages : 2

[6181]-16

B.E. (Mechanical/Automobile Engineering)

INTERNET OF THINGS

(2019 Pattern) (Semester - VII) (402044E) (Elective - III)

Time : 2½ Hours] ***[Max. Marks : 70***

Instructions to the candidates :

1) ***Solve Q.1 or Q.2, Q.3 or Q.4, Q.5 or Q.6, Q.7 or Q.8.***
2) ***Neat diagram must be drawn wherever necessary.***
3) ***Figures to the right indicate full marks.***
4) ***Use of electronic pocket calculator is allowed.***
5) ***Assume suitable data, if necessary.***

Q1) a) Describe Arduino Software with respect to Source Code, Compile Code and Upload Machine Code. **[9]**

b) Explain the Temperature & Humidity Sensor interfacing with any board. **[9]**

OR

Q2) a) What are the types of Actuators & explain any two types in detail? **[10]**

b) Explain any four Arduino's built-in functions. **[8]**

Q3) a) Explain in detail IoT Communication APIs and their types. **[8]**

b) What are the advantages and disadvantages of Cloud Computing? **[9]**

OR

Q4) a) What are the popular communication technologies? Explain any four. **[9]**

b) Explain Radio-Frequency identification (RFID) communication. **[8]**

Q5) a) Explain the three components of HTTP Response made by a server to a client. **[9]**

b) Describe three parts of Message Queueing Telemetry (MQTT) protocol. **[9]**

OR

P.T.O.

Q6) a) What are the Security issues to be addressed during development of IoT? **[9]**

b) Describe and illustrate the structure of Representational State Transfer (REST) protocol. **[9]**

Q7) a) What are the legal challenges in implementing IoT applications? **[8]**

b) Describe the security, privacy and trust issues in IoT-Data-Platforms when used for Smart Cities. **[9]**

OR

Q8) a) Explain Brownfield IoT. **[8]**

b) Explain use of IoT in Healthcare applications. **[9]**

▽▽▽▽

Total No. of Questions : 8]

SEAT No. : ____

P-6483

[Total No. of Pages : 3

[6181]-17

B.E. (Automobile Engineering)

FINITE ELEMENTS ANALYSIS

(2019 Pattern) (Semester - VII) (416485A) (Elective - IV)

Time : 2½ Hours] ***[Max. Marks : 70***

Instructions to the candidates:

1) ***Answer Q1 or Q2, Q3 or Q4, Q5 or Q6, Q7 or Q8.***
2) ***Neat diagrams must be drawn wherever necessary.***
3) ***Figures to the right side indicate full marks.***
4) ***Use of Logarithmic tables, slide rule, electronic pocket calculator is allowed.***
5) ***Assume suitable data if necessary.***

Q1) a) A constant Strain triangle is defined by three nodes 1(1.5,2), 2(7, 3.5) and 3 (4,7). Evaluate the shape function N1, N3 and N3 for interior point P (3.85, 4.8). Also calculate the Jacobian of transformation J. **[10]**

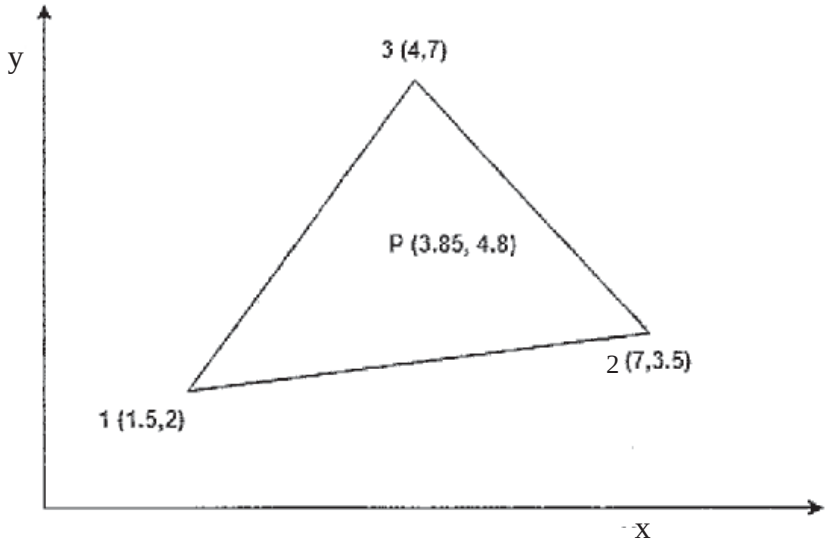

Fig. 1

b) Explain what is meant by Plane Stress and Plane Strain condition and how it is used for conversion of 3D problem into 2D problem. **[8]**

OR

P.T.O.

Q2) a) Determine the Cartesian Coordinate of Point P ($\xi = 0.5$, $\eta = 0.6$), shown in Fig. 2. **[10]**

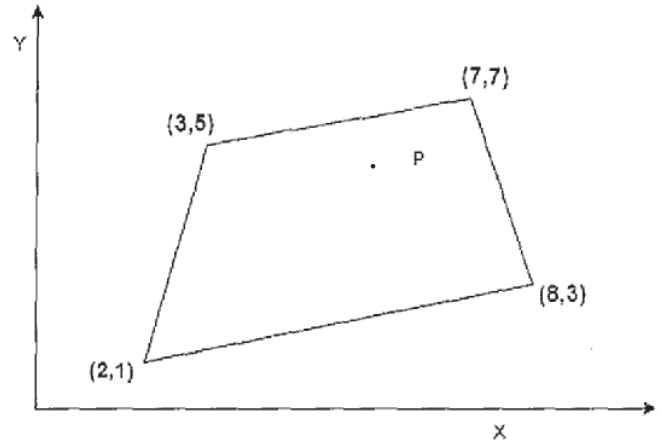

Fig. 2

b) How do you define the 2D elements? Explain the different types of 2D element. **[8]**

Q3) a) Briefly explain the concept of P and H formulation in meshing, and how it use for improving the FEA results accuracy. **[9]**

b) Explain the following terminologies in element meshing **[8]**

i) Aspect ratio

ii) Warp angle

OR

Q4) a) Why element quality is checks in necessary in FEA? **[5]**

b) What is the critical region in FEA model? Which are the different way to improve the FEA results accuracy in critical region? **[4]**

c) Explain the following terminologies in element meshing **[8]**

i) Jacobian

ii) Stretch

Q5) a) Compare the linear and non-linear FEA analysis with respective its characteristic and feature. **[10]**

b) Explain Geometric Nonlinearity and Material Nonlinearity related to nonlinear problems. **[7]**

OR

Q6) a) Why is material modelling critical in nonlinear analysis? Explain any type of material model in nonlinear analysis. **[10]**

b) Write the general procedure for non-liner analysis solid mechanics. **[7]**

Q7) a) A composite slab shown in Fig 3 consists of three materials (mat 1, mat 2 and mat 3) with thermal conductivity of 20W/mK, 30 W/mK and 50W/mK and thickness 0.3m, 0.15m and 0.15m respectively. The outer surface is at 20°C and the inner surface is exposed to the convective heat transfer coefficient of 25W/mK and a medium at 800°C. Determine the temperature distribution within the wall. **[12]**

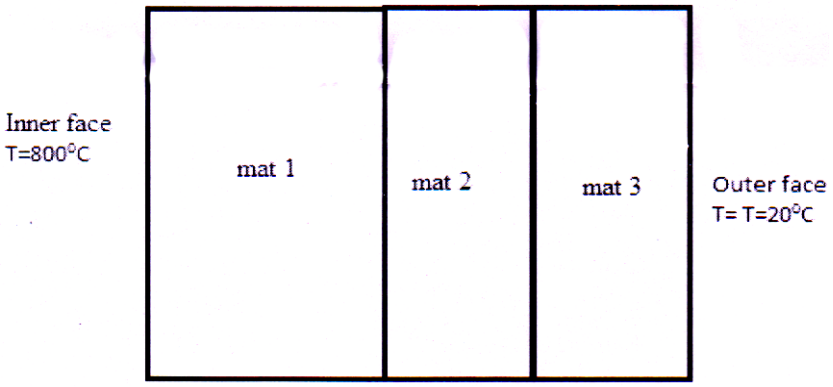

Fig. 3

b) Write the short notes on : **[6]**

i) consistence mass matrix

ii) lumped mass matrix

OR

Q8) a) The bar shown in Fig. 4 having uniform cross-section with cross-section area $A = 50 \times 10^{-6}$ m^2, length L = 1.5m, modulus of elasticity $E = 2 \times 10^{11}$ N/m^2 and density $\rho = 7800$ kg/m^3. Estimate the natural frequency of bar. Model the bar by using two elements. **[12]**

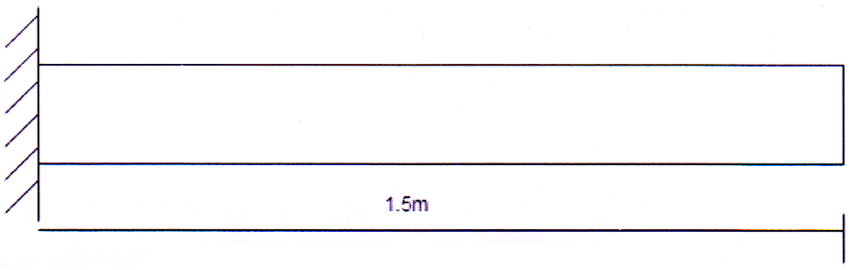

Fig. 4

b) What is the shape function? How it is used in thermal analysis to find the temperature distribution within the wall? **[6]**

Total No. of Questions : 8]

SEAT No. :

P6484

[Total No. of Pages :2

[6181] -19

B.E. (Automobile Engineering)

HYBRID & ELECTRIC VEHICLE

(2019 Pattern) (Semester-VIII) (416489)

Time : 2½ Hours] *[Max. Marks : 70*

Instructions to the candidates:

1) ***Assume suitable data if necessary.***
2) ***Answer FOUR questions from the following (Q1 or Q2, Q3 or Q4, Q5 or Q6, Q7 or Q8.***

Q1) a) State any two applications of following EV motors: **[8]**

i) BLDC Motor, ii) Induction Motor,

iii) PMAC/I-PMAC Motor, iv) Switch Reluctance Motor.

b) How does 'Regeneration' in 'Electric Vehicle (EV)' take place? **[9]**

OR

Q2) a) Explain different losses in electric vehicle motors. **[8]**

b) Why internal permanent magnet (IPM) motors are preferably used in electric vehicle? **[9]**

Q3) a) Draw and explain 'Discharge Characteristics' of Li-Ion battery. **[10]**

b) Why slow charging is preferred (or fast charging is avoided) in Li-Ion battery. **[8]**

OR

Q4) a) Calculate SOC for 10 second for a pulse of 5 Amp current for following given data: **[10]**

i) Total cell capacity = 10 Watt-hr,

ii) Cell internal resistance = 30 mili-Ohms,

iii) Initial state of charge = 85%

iv) Open circuit voltage = 3.9 Volt.

b) List energy storage devices of electric vehicle & explain any one briefly. **[8]**

P.T.O.

Q5) a) What are the primary functions of Battery Management System (BMS)? **[8]**

b) What are the components of Battery Management System? **[9]**

OR

Q6) a) What is the need of Battery Thermal Management System (BTMS)? **[8]**

b) State different methods used in Battery Thermal Management System. Explain any one method with neat sketch. **[9]**

Q7) It is decided to provide equivalent 'Battery Electric Motor' combination for existing 'Hero Honda Splendor' with following specification: (1) Gross Vehicle Weight (GVW) = 205kg, (2) Maximum Speed = 85kmph, (3) Acceleration = 0.7m/s^2 for plane road and 0.49m/s^2 for grade road, (4) Gradability = 7º, (5) Radius of wheel = 0.292m, (6) Expected Range = 54km for EV, (7) Engine Specifications: Power = 5.9kw, Volume = 97.2cc, Max. Torque = 8.05Nm @ 6000 RPM, (8) Gear Box: Four gears with gear ratios G_1 = 2.92, G_2 = 1.72, G_3 = 1.16, G_4 = 0.9, and Final Drive Reduction = 3.5. Also assume Air Density = 1.2kg/m^3, Coe. Of Drag = 0.65, Frontal Area = 0.23m^2, Coe. of rolling resistance = 0.013. **Calculate:** (i) Motor Power in kW, (ii) Battery Pack Capacity in kwhr, (iii) Energy Efficiency in Watt-hour/km, (iv) Max. Vehicle Speed in kmph, and (v) EV range in km. **[18]**

OR

Q8) It is decided to design an electric 4-Wheeler with following specification: (1) Gross Vehicle Weight (GVW) = 1200kg, (2) Maximum Speed = 120kmph, (3) Acceleration = 0 to 120 kmph in 20 seconds, (4) Grade = 5º, (5) Radius of wheel = 0.31m, (6) Coe. of Drag = 0.35, (7) Gear Ratio = 9:1, (8) Air Density = 1.225kg/m^3, (9) Front Area = 2.5 m^2 (10) Coe. of rolling resistance = 0.013, (11) Speed on grade road = 60 kmph, (12) Coe. of sliding friction = 0.3.

Calculate: (i) Motor Power in kW, (ii) Battery Pack Capacity in kwhr, (iii) Energy Efficiency in Watt-hour/km, (iv) Actual Max. Vehicle Speed in kmph, and (v) EV range (in km) for plane road at constant speed of 90kmph. **[18]**



Total No. of Questions : 8]

SEAT No. : ____

P6485

[Total No. of Pages : 3

[6181]-20
B.E. (Automobile Engineering)
AUTOMOTIVE SYSTEM DESIGN
(2019 Pattern) (Semester - VIII) (416490)

Time : 2½ Hours] ***[Max. Marks : 70***

Instructions to the candidates:

1) ***Answer four questions from the following.***
2) ***Figures to the right indicate full marks.***
3) ***Assume suitable data if necessary.***

Q1) a) Why a hollow propeller shaft normally used? **[4]**

b) A three speed gear box gives 3 forward speeds and one reverse with a top gear of unity and bottom and reverse gear ratio of approximately 3.3:1. The centre distance between the shafts is to be 110 mm approximately. Gear teeth of module 3.25 mm. Find the number of gear teeth. **[6]**

c) Explain the design procedure of live axles. **[7]**

OR

Q2) a) Explain the characteristics of a propeller shaft. **[4]**

b) Explain the design procedure of final drive. **[6]**

c) Explain the design procedure of dead axle. **[7]**

Q3) In a hydraulic braking system the force on foot pedal is 100N, pedal leverge ratio is 4.4, cross sectional area of master cylinder is 4 cm^4, cross sectional area of front piston 20 cm^4. Cross sectional area of the rear piston is 5 cm^4. Distance moved by effort is 1 cm. **[18]**

Calculate the following.

a) Front to rear brake ratio

b) Total force ratio

c) Distance moved by output

d) Cylinder movement ratio

e) Total movement ratio

OR

P.T.O.

Q4) Explain the following; **[18]**

a) Brake fade.

b) Brake torque.

c) Brake balance.

d) Braking efficiency.

e) Properties of friction lining.

f) Components used in hydraulic brake system

Q5) a) A semi elliptic type spring has leaves of 75 mm width and 10 mm thickness, effective length is 900 mm. If the stress is not to exceed 220.725 MPa, when the spring is loaded to 4905 N. Estimate the required number of leaves and the deflection under this condition. If the spring is just flat under load, what is the initial radius? Take E = 196.2 GPa. **[10]**

b) Write a note on air springs. **[7]**

OR

Q6) Discuss on; **[17]**

a) What is nipping in leaf springs?

b) Brake fade and Brake torque.

c) Brake balance and Braking efficiency.

d) Components used in hydraulic brake system.

Q7) Design a Tensile Bar for Minimum Cost of the following materials. **[18]**

Assume Factor of Safety of 2.0

Material	Mass density (kg/m^3)	Yield strength (MPa)	Material cost Rs/N
Steel	3000	16	130
Al alloy	3000	32	50
Magnesium alloy	2100	32	20

Length of the bar is 200 mm and a constant tensile load on bar is of 5000N.

OR

Q8) a) What do you understand by optimum and adequate design? **[8]**

b) Write note on; **[10]**

i) Design for natural tolerances.

ii) Statistical considerations in design.

Total No. of Questions : 8]

SEAT No. :

P6486

[Total No. of Pages : 2

[6181]-21
B.E. (Automobile Engineering)
ALTERNATIVE FUELS AND EMISSION CONTROL
(2019 Pattern) (Semester - VIII) (Elective - V) (416491 A)

Time : 2½ Hours] *[Max. Marks : 70*

Instructions to the candidates:

1) ***Answer Q.1 or Q.2, Q.3 or Q.4, Q.5 or Q.6, Q.7 or Q.8.***
2) ***Neat diagrams must be drawn wherever necessary.***
3) ***Figures to the right side indicate full marks.***

Q1) a) Describe some important properties of Vegetable Oil. **[6]**

b) Describe the benefits of Vegetable Oil in a country like India. **[6]**

c) What Modification is required for CI engine to run on Vegetable Oil. **[6]**

OR

Q2) a) What are difference between biodiesel and Vegetable Oil. **[6]**

b) Write a short note on degumming of Vegetable Oil. **[6]**

c) Write advantages and limitation of Vegetable Oil. **[6]**

Q3) a) Explain production method of Biogas. **[6]**

b) Describe important properties of LPG. **[5]**

c) Differentiate between CNG and LPG with respect to their properties. **[6]**

OR

Q4) a) Which is safer fuel between CNG and LPG? **[6]**

b) Discuss storage facility for LPG. **[6]**

c) What are the advantages of using biogas as a fuel? **[5]**

P.T.O.

Q5) a) Explain the construction and working of NDIR. **[8]**

b) Discuss the effects of pollutants on environment human beings. **[9]**

OR

Q6) a) Explain the construction and working of FID. **[8]**

b) Describe the SHED Test with the help of a neat sketch. **[9]**

Q7) a) Explain the remedies for engine emission. **[9]**

b) List the negative effects of CO emission on human health, what is treatment to CO intoxication person? **[9]**

OR

Q8) a) Effect of NOx emission on human as well as on environment. **[6]**

b) Write a note on Indian emission norms. **[6]**

c) Write a note on Ambient air quality monitoring. **[6]**

Total No. of Questions : 8]

SEAT No. :

P6487

[Total No. of Pages : 2

[6181]-22
B.E. (Automobile Engineering)
RENEWABLE ENERGY
(2019 Pattern) (Semester - VIII) (416491 B) (Elective - V)

Time : 2½ Hours] *[Max. Marks : 70*

Instructions to the candidates:

1) ***Answer Q.1 or Q.2, Q.3 or Q.4, Q.5 or Q.6, Q.7 or Q.8.***
2) ***Neat diagrams must be drawn wherever necessary.***
3) ***Figures to the right side indicate full marks.***

Q1) a) Draw and explain the working of Solar-wind hybrid system. **[9]**

b) Write a note on "control and monitoring of a wind Farm". **[9]**

OR

Q2) a) Classify wind-turbines used to Extract wind energy. Explain the different types in brief. **[9]**

b) What do you mean by wind velocity duration curve? Explain it. **[9]**

Q3) a) Describe a binary cycle liquid dominated geothermal power plant. **[9]**

b) What are the advantages and disadvantages of Geothermal Energy forms. **[8]**

OR

Q4) a) Classify prime movers for Geothermal energy Conversion. Explain any one with neat diagram. **[9]**

b) Describe a Vapour dominated geothermal power plant. **[8]**

Q5) a) Explain different technologies of Biomass Conversion. **[9]**

b) Describe MHD open cycle system. What are advantages of MHD power generation? **[9]**

OR

P.T.O.

Q6) a) Explain Waste Incineration Energy plant with its schematic. **[9]**

b) What is Gasifier? Describe up-draught Gasifier with neat sketch. **[9]**

Q7) a) What are different types of ocean thermal energy conversion system (OTEC) and Explain open cycle OTEC System with neat sketch. **[9]**

b) Explain different Ocean Energy Resources in brief. **[8]**

OR

Q8) a) Write a note on Small hydel power Plant. **[9]**

b) What are advantages and limitations of Ocean Energy. **[8]**

Total No. of Questions : 8]

SEAT No. :

P6488

[Total No. of Pages : 2

[6181]-23
B.E. (Automobile Engineering)
TRANSPORT MANAGEMENT AND AUTOMOBILE INDUSTRY
(2019 Pattern) (Semester - VIII) (416492A) (Elective - VI)

Time : 2½ Hours] *[Max. Marks : 70*

Instructions to the candidates:

1) ***Answer Q.1 or Q.2, Q.3 or Q.4, Q.5 or Q.6, Q.7 or Q.8.***
2) ***Neat diagrams must be drawn wherever necessary.***
3) ***Figures to the right side indicate full marks.***

Q1) a) Explain Objectives of taxation. **[6]**

b) Why road tax is levied on vehicle. **[6]**

c) Explain one Time tax for Maharashtra State. **[6]**

OR

Q2) a) Write short note on taxations. **[6]**

b) Explain the structure and method of Taxation. **[6]**

c) Who are the exempted from tax payment & why? **[6]**

Q3) a) Explain different types of Traffic Signs? **[6]**

b) Explain the improtance of insurance. **[5]**

c) What is third party insurance? **[6]**

OR

Q4) a) Explain types of motor vehicle insurance. **[6]**

b) Explain zero depth insurance. **[6]**

c) Distinguish between Insurance & Assurance. **[5]**

Q5) a) Explain the functions of good transport organization with the structure. **[9]**

b) Describe the schedule structure of good transport organization. **[8]**

OR

P.T.O.

Q6) a) Describe basic elements of transport system. **[8]**

b) What is the procedure for transportation of petroleum product? **[9]**

Q7) a) Explain seven quality tools. **[6]**

b) Explain Bharat NCAP. **[6]**

c) Explain Automotive Industry standards. **[6]**

OR

Q8) a) Explain Quality Circle. **[6]**

b) Explain JIT system. **[6]**

c) Benefits of ISO14001 certification. **[6]**

Total No. of Questions: 8]

SEAT No. :

P6489

[Total No. of Pages :2

[6181]-24
B.E. (Automobile Engineering)
AUTOMOTIVE SAFETY
(2019 Pattern) (Semester-VIII) (Elective-VI) (416492 B)

Time : 2½ Hours] ***[Max. Marks : 70***

Instructions to the candidates:

1) ***Answer Q1or Q2, Q3 or Q4, Q5 or Q6, Q7 or Q8.***
2) ***Neat diagrams must be drawn wherever necessary.***
3) ***Figures to the right side indicate full marks.***

Q1) a) Explain the injury tolerance and deceleration curves in crashworthiness. **[9]**

b) Compare the pole testing with rollover testing of a vehicle. **[8]**

OR

Q2) a) Explain the volunteer testing and cadaver testing for adult passengers in a sports utility vehicle. **[9]**

b) Describe the competitive race testing for a sports car. **[8]**

Q3) a) Explain the five steps of occupant package development process. **[10]**

b) Describe the ergonomic development of a vehicle with human modelling predictions with the help of neat sketches. **[8]**

OR

Q4) a) Explain the strategies for improving occupant accommodation and comfort in a car. **[9]**

b) Discuss the Vehicle Seating Configuration for a multi utility vehicle as per SAE Norms. **[9]**

P.T.O.

Q5) a) Design a Hybrid III Dummy as per safety standards. **[9]**

b) Discuss the simulation with pedestrian simulation tests. **[8]**

OR

Q6) a) Describe the CRABI Infant Dummies and Side Impact Dummies. **[9]**

b) Explain the Real Human Body Modelling. **[8]**

Q7) a) Explain the active suspension system. **[9]**

b) Describe the working of forward collision warning system. **[9]**

OR

Q8) a) Explain the working of blind spot alert system. **[9]**

b) Discuss the working of automotive collision avoidance system. **[9]**



Total No. of Questions : 8]

SEAT No. :

P6490

[Total No. of Pages : 2

[6181]-25
B.E. (Automobile Engineering)
PROCESS PLANNING & COST ESTIMATION
(2019 Course) (Semester - VIII) (416492C) (Elective - VI)

Time : 2½ Hours] *[Max. Marks : 70*

Instructions to the candidates:

1) ***Answer Q.1 or Q.2, Q.3 or Q.4, Q.5 or Q.6, Q.7 or Q.8.***
2) ***Neat diagrams must be drawn wherever necessary.***
3) ***Figures to the right side indicate full marks.***
4) ***Assume suitable data if necessary.***

Q1) a) What are the key steps involved in developing a cost estimate? **[9]**

b) Explain elements of cost in detail. **[9]**

OR

Q2) a) Differentiate between cost estimating and cost accounting. **[9]**

b) Explain in details Parametric Cost Estimation. **[9]**

Q3) a) Differentiate between Direct and Indirect Estimation. **[8]**

b) Explain Factory Expenses in detail. **[9]**

OR

Q4) a) A factory is producing 1000 high tensile fasteners per hour on a machine. The material cost is Rs. 375, labour cost is Rs. 245 and direct expense is Rs. 80. The factory oncost is 150 percent of the total labour cost and office oncost is 30 percent of the factory cost. If the selling price of each fastener is Rs. 1.30, calculate whether there is loss or gain and by what amount? **[8]**

b) Explain various methods used in industry for allocation of overheads.**[9]**

P.T.O.

Q5) a) Explain cost estimation procedure for forging. **[8]**

b) A cast foundry employs 30 persons. It consumes material worth Rs. 25,000 pays workers at the rate of Rs. 10/hr and incurs a total overhead of Rs. 20,000. In a particular month (25 days), workers had an overtime of 150 hours and were paid twice the normal rate. **[9]**

Find :

i) Total cost

ii) Man hour rate of overheads. Assume an 8 hrs workshift per day.

OR

Q6) a) Explain material cost estimation procedure in dertail. **[8]**

b) The wedge shown in the figure below is to be made of 38.1 mm diameter stock by forging. Calculate the length of the bar if the volume remains unchanged. **[9]**

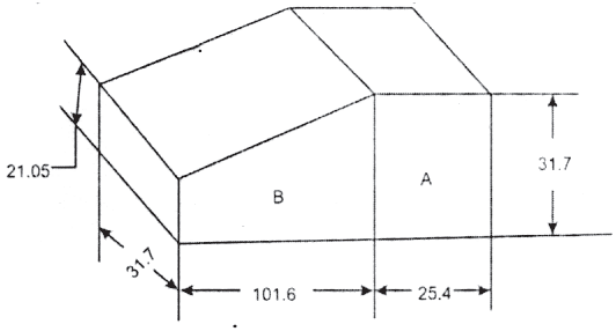

Q7) a) Explain the important factors for machining time estimation in lathe operation. **[9]**

b) Calculate the machining time to turn the dimensions shown in figure starting from a ms bar of 100 mm. The cutting speed with HSS tool 80 mpm and feed is 0.8 mm/rev., depth of cut is 3 mm per pass. **[9]**

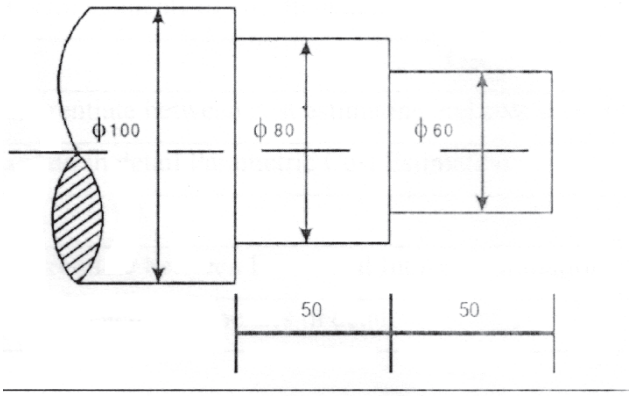

OR

Q8) a) Explain importance of machining time calculation in detail. **[9]**

b) Find the time required to drill 4 holes in a cast iron flange each of 2 cm depth. If the hole diameter is 2 cm. Assume cutting speed as 21.9 m/min. and feed as 0.02 cm/rev. **[9]**

Total No. of Questions : 8]

SEAT No. :

P-6491

[Total No. of Pages : 2

[6181]-31

Final Year B.E. (Biotechnology)

BIOCHEMICAL ENGINEERING

(2019 Pattern) (Semester - VII) (415461)

Time : 2½ Hours] *[Max. Marks : 70*

Instructions to the candidates:

1) ***Answer Q1 or Q2, Q3 or Q4, Q5 or Q6, Q7 or Q8.***
2) ***Neat diagrams must be drawn wherever necessary.***
3) ***Figures to the right side indicate full marks.***
4) ***Assume Suitable data, if necessary.***

Q1) a) Draw a neat sketch of pH control system in a fermenter and explain how set point and dead band functions in a pH control system? **[9]**

b) What is CIP? Explain how cleaning and sterilization facilities vary in case of small (1-5 lit) and large (10-20 lit) scale reactors? **[9]**

OR

Q2) a) What are radial and axial type of impellers? Draw flow patterns and explain in detail with one example. **[9]**

b) Draw and explain different components of the agitation system of a fermenter. **[9]**

Q3) a) Write difference between aeration and agitation. Are these two parameters interdependent? If yes how? **[9]**

b) Explain in detail oxygen transfer inside the cell by diffusion mechanism. **[8]**

OR

Q4) Enlist techniques used for calculation of oxygen uptake rate and write short notes on : **[17]**

a) Sulphite oxidation Technique

b) Gassing out technique

P.T.O.

Q5) a) Draw a flow chart and give objectives and considerations of scale up. **[9]**

b) What is pilot plant? Why there is a need to develop a pilot plant before scale up? **[9]**

OR

Q6) Give one example and describe a complete scale up from upstream to downstream processing of a bioproduct. **[18]**

Q7) a) What are types of immobilized cell reactors? Draw sketches and explain in detail. **[9]**

b) Explain in detail how sodium alginate molecules bind enzyme molecules? **[8]**

OR

Q8) a) Where disposable reactors can be used? Give one case study. **[9]**

b) What is a semi synthetic process? Why in case of antibiotics or drug formulations semi synthetic processes are preferred? **[8]**

⌘⌘⌘

Total No. of Questions : 8]

SEAT No. :

P-6492

[Total No. of Pages : 2

[6181]-32

Final Year B.Tech. (Biotechnology)

BIOINFORMATICS

(2019 Pattern) (Semester-VII) (415462)

Time : 2½ Hours] ***[Max. Marks : 70***

Instructions to the candidates :

1) ***Solve Q.1 or Q.2, Q.3 or Q.4, Q.5 or Q.6, Q.7 or Q.8.***
2) ***Figures to the right indicate full marks.***
3) ***Assume suitable data, if necessary.***

Q1) a) Write a note on SWISS-PROT? What is the advantage and what unique characteristic features? **[9]**

b) What are the different levels of protein structure classification? How it helps and causes problems in creating structural databases of proteins?**[9]**

OR

Q2) a) Write a note on TrEMBL, include what it is, what is its significance, and how does it help further the research? **[9]**

b) What are Heuristic algorithms like BLAST? What is the significance of E value in BLAST? **[9]**

Q3) a) What is protein structure prediction? Can we do function prediction as well?Explain with a suitable example. **[9]**

b) Give the significance of protein structure visualization. What softwares used for it? **[8]**

OR

Q4) a) Write a note on PROSITE, PRINTS and BLOCKS. (3 marks each) **[9]**

b) What is Proteomics? How does proteomics help in advancing healthcare research. **[8]**

P.T.O.

Q5) a) What are Pairwise sequence alignment methods? **[8]**

b) Discuss the difference in the approach of Global Alignment and Local alignment. Also give a narrative of the difference between them at the algorithm level. **[10]**

OR

Q6) a) What are STS and how it is used to assemble genome? **[10]**

b) How does the BLOSUM differ from PAM? **[8]**

Q7) a) What is the difference between Dendogram and Phylogenetic Tree? **[8]**

b) What is phylogenetic analysis? explain with an example. **[9]**

OR

Q8) a) What is CLUSTAL-OMEGA? Explain the algorithm and narrate steps to do Multiple Sequence Alignment. **[8]**

b) What is Neighbour Joining Tree and UPGMA Tree? **[9]**



Total No. of Questions : 8]

SEAT No. :

P-6493

[Total No. of Pages : 2

[6181]-34

Final Year B.E. (Biotechnology)

ENVIRONMENTAL BIOTECHNOLOGY

(2019 Pattern) (Semester-VII) (415463B) (Elective-III)

Time : 2½ Hours] ***[Max. Marks : 70***

Instructions to the candidates :

1) ***Answer Q1 or Q2, Q3 or Q4, Q5 or Q6, Q7 or Q8.***
2) ***Neat diagrams must be drawn wherever necessary.***
3) ***Figures to the right side indicate full marks.***
4) ***Use of a Calculator is allowed.***
5) ***Assume suitable data if necessary.***

Q1) a) Enlist various methods used in Industrial effluent treatment. Explain any one method in detail. **[9]**

b) What are the general processes used in the Sugar industry? Explain the problems related to the processes. **[9]**

OR

Q2) Which processes are followed by Textile Industries to develop products? Write the characteristics of effluents in the Textile industry. Describe the primary methods of effluent treatment. **[18]**

Q3) a) How many forms of air emission control are mentioned in the literature? Explain the process of condensation in detail. **[10]**

b) What is the basic design and working principle of settling chamber used for control of particulate pollution? **[7]**

OR

Q4) Describe the working principles and applications of the following equipment:

a) Spray Tower

b) Cyclone separator

[17]

P.T.O.

Q5) What are Xenobiotic Compounds? Draw a flowsheet for remedial measures for solid industrial waste. Explain the techniques used in detail. **[18]**

OR

Q6) a) Classify the medical solid waste and which methods can be used for management of medical solid waste? Explain. **[9]**

b) How does biotechnology can be applied for treatment of solid waste?**[9]**

Q7) a) Write a note on Microorganisms used in solid phase Bioremediation.**[10]**

b) Explain the working principle of in-situ Bioremediation and Bioreactors used for the same. **[7]**

OR

Q8) How liquid phase bioremediation is carried out? Explain use of any one bioreactor to carry out the liquid phase bioremediation. **[17]**



Total No. of Questions : 8]

SEAT No. :

P-6494

[Total No. of Pages : 2

[6181]-35

B.E. (Biotechnology)

GENOMICS

(2019 Pattern) (Semester - VII) (415463C) (Elective - III)

Time : 2½ Hours] ***[Max. Marks : 70***

Instructions to the candidates:

1) ***Solve Q.1 or Q.2, Q.3 or Q.4., Q.5 or Q.6, Q.7 or Q.8,***
2) ***Figures to right indicate full marks.***
3) ***Assume suitable data if necessary.***

Q1) a) What is Transcriptomics? Giving examples explain its applications. **[12]**

b) Briefly give characteristics of eukaryotic gene structure. **[6]**

OR

Q2) a) How will you study transcriptome of cells treated and untreated with drugs. Give flow chart of the study plan and results analysis. **[12]**

b) What Are the three mechanisms of miRNA functions? **[6]**

Q3) a) Describe any two methods to study DNA methylation with respect to principle, applications and advantages. **[12]**

b) *Drosophila melanogaster* as a model organism in epigenetics. **[5]**

OR

Q4) a) Discuss the role of histone PTMs in epigenetics. **[12]**

b) Write short notes on Bisulphite sequencing. **[5]**

Q5) a) Discuss the role of genomics in personalized medicine. **[12]**

b) What is ADME? **[6]**

OR

P.T.O.

Q6) a) Describe in detail Genetic Polymorphisms of Drug-Metabolizing Enzymes. **[12]**

b) How will Slow metabolizers and Extensive metabolizers respond to a drug? **[6]**

Q7) a) How Does Nutrigenomics Impact Human Health? **[12]**

b) Real time PCR. **[5]**

OR

Q8) a) Design an experiment to study effect of Mediterranean diet on gene expressions in rat model. **[12]**

b) Write a note on Dutch famine cohort for nutrigenomics research. **[5]**



Total No. of Questions : 8]

SEAT No. :

P-6495

[Total No. of Pages : 2

[6181]-37

Final Year B.Tech. (Biotechnology)

NANOTECHNOLOGY

(2019 Pattern) (Semester - VII) (415464B) (Elective - IV)

Time : 2½ Hours] *[Max. Marks : 70*

Instructions to the candidates :

1) ***Answer Q.1 or Q.2, Q.3 or Q.4, Q.5 or Q.6, Q.7 or Q.8.***
2) ***Neat diagram must be drawn wherever necessary.***
3) ***Figures to the right side indicate full marks.***
4) ***Assume suitable data, if necessary.***

Q1) Explain in detail the application of nanotechnology in the field of : **[18]**

a) Cell therapy
b) Gene therapy
c) Cardiac therapy
d) Nanomolecular
e) Cytoyenetics
f) Vaccination

OR

Q2) a) What is targeted drug delivery system? Explain its strategies in details. **[9]**

b) Write down the definition, methodology and applications of nanosurgery. **[9]**

Q3) a) Discuss in details about the polymer based sensor used for biomedical application. **[8]**

b) What are nanodevices? Also discuss how nanodevices replacing other devices in biomedical field. **[9]**

OR

Q4) a) Write characteristic and application of immobilized biosensors. **[8]**

b) Discuss in details about generation of biosensors. **[6]**

c) What is a Biochip? **[3]**

P.T.O.

Q5) a) Write a short note on DNA biosensor. **[6]**

b) Give an explanation on Transponder and Reader components used in biochip. **[6]**

c) What are the applications of biomaterial hybrid system used for sensing? Discuss. **[6]**

OR

Q6) a) Write a short note on Optical biosensor. **[6]**

b) Discuss in detail about miniaturization of biosensors? **[6]**

c) Comment on: Use of nonmaterial's in nanodevices. **[6]**

Q7) a) What are the potential risks and benefits of nanobiotechnology for human health? Discuss. **[8]**

b) Discuss in detail about DNA based biosensor. **[9]**

OR

Q8) a) Write a details note on : **[10]**

i) Enzyme based biosensors

ii) Electrochemical biosensors

b) Discuss in detail about a fuel cell? **[7]**

▽▽▽▽

Total No. of Questions : 8]

SEAT No. :

P-6496

[Total No. of Pages : 2

[6181]-38

Final Year B.E. (Biotechnology)

STEM CELL BIOLOGY AND REGENERATIVE MEDICINE

(2019 Pattern) (Semester - VII) (415464C) (Elective - IV)

Time : 2½ Hours] ***[Max. Marks : 70***

Instructions to the candidates :

1) ***Solve Q.1 or Q.2, Q.3 or Q.4, Q.5 or Q.6, Q.7or Q.8.***
2) ***Figures to the right indicate full marks.***
3) ***Assume suitable data if necessary.***

Q1) a) Discuss how regeneration of stem cells takes place in planaria. **[6]**

b) Describe in detail about facultative stem cells. **[6]**

c) Write note on stem cells differentiation and plasticity. **[6]**

OR

Q2) a) Discuss on tissue regenerative capacity of adult stem cells. **[6]**

b) Describe detail process of isolation and culturing of stem cells. **[6]**

c) How the characterization of somatic stem cells is done? Discuss the detail process. **[6]**

Q3) a) Write detail note on stem cells interventions. **[9]**

b) Discuss in detail about Ethics in Gene editing. **[8]**

OR

Q4) a) Discuss about Embryo Ethics and Egg donation Ethics. **[9]**

b) What are the guidelines for stem cells therapy and clinical trials in India? Explain them in detail. **[8]**

Q5) a) Discuss about computational tools involved to dissect stem cells. **[8]**

b) Explain about the importance of scaffold helpful in organ culture. **[10]**

OR

P.T.O.

Q6) a) Discuss the process for in-vitro culturing of adult stem cells to analyse differentiation and properties. **[10]**

b) Write in detail about natural and synthetic scaffolds for tissue engineering. **[8]**

Q7) a) Explain about disease modeling and drug screening. **[8]**

b) What are cell replacement therapies from Pluripotent stem cells explain them in detail. **[9]**

OR

Q8) a) Discuss in detail about in-vitro transdifferentiation of fibroblast therapy. **[8]**

b) Elaborate about property of regeneration and differentiation with various clinical applications of stem cells. **[9]**



Total No. of Questions : 8]

SEAT No. :

P 6497

[Total No. of Pages :2

[6181] -39

Final Year B.E. (BIOTECHNOLOGY)

BioProcess Modelling & Simulation

(2019 Pattern) (Semester-VIII) (415471)

Time : 2½ Hours] *[Max. Marks : 70*

Instructions to the candidates:

1) ***Answer Q1 or Q2, Q3 or Q4, Q5 or Q6, Q7 or Q8.***
2) ***Neat diagrams must be drawn wherever necessary.***
3) ***Figures to the right indicate full marks.***
4) ***Assume suitable data if necessary.***

Q1) a) Write a short note on models with independent variables giving an appropriate example. **[9]**

b) Describe the necessity of boundary conditions using horizontal plug flow reactor model. **[9]**

OR

Q2) a) How models are classified based on state of the processes? Illustrate with one example of each. **[9]**

b) Give comparison between rigid and stochastic processes. **[9]**

Q3) a) Consider a perfectly mixed simple reactor with two components biomass and substrate. The biomass consumes substrate inside the reactor. Assuming volume of the reactor remains constant. Write component balance equations for biomass and substrate. **[9]**

b) Explain in detail types of product formation kinetics with profiles. **[8]**

OR

Q4) a) Consider the chemostat system with cell recycle ratio α based on volume flow rates and C concentration factor with respect to recycle and effluent stream. Draw a neat sketch of chemostat with recycle, state assumptions and parameters involved in the system and write total and component continuity equations. **[12]**

b) Write a short note on modelling of suspended growth reactors. **[5]**

Q5) a) Write a short note on modelling of constant volume reactors. **[6]**

b) Draw bubble column reactor system, define assumptions and write total and component continuity equations for this system. **[12]**

OR

P.T.O.

Q6) a) Draw a neat sketch of packed column reactor, specify parameters and write mass transfer and reaction equations considering second order reaction. **[9]**

$$-r_A = kC_AC_B$$

b) Draw neat sketches and differentiate between agitated and sparged bioreactors. **[9]**

Q7) a) Draw a neat sketch of a binary distillation process. State the assumptions and develop the equations describing rectification section, stripping section and overall binary distillation system. **[12]**

b) Write a short note on various softwares used in simulating various bioprocesses with one case study. **[5]**

OR

Q8) a) A perfectly mixed, isothermal CSTR has an outlet weir. The flow rate over the weir is proportional to the height of liquid over the weir. h_{ow} to the 1.5 power. The weir height is h_w. **[12]**

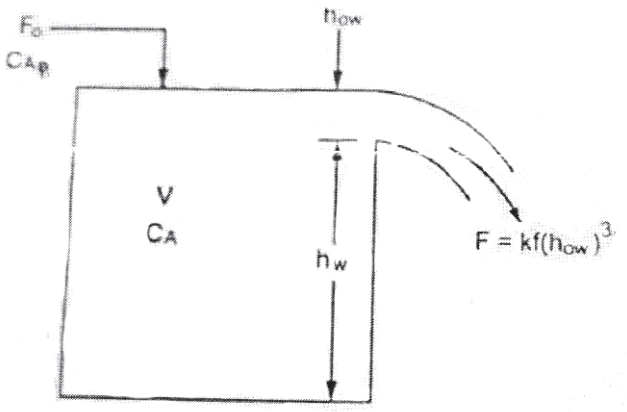

The cross-sectional area of the tank is A.Assume constant density. A first order reaction takes place in a tank. $A \xrightarrow{k} B$. Derive the equations describing the system.

b) Write a short note on challenges observed in modelling of various unit operations with one case study. **[5]**



Total No. of Questions: 8]

SEAT No. : ____

P6498

[Total No. of Pages : 2

[6181]-40
Final Year B.Tech. (Biotechnology)
PLANT ENGINEERING AND PROJECT COSTING
(2019 Pattern) (Semester-VIII) (415472)

Time : 2½ Hours] ***[Max. Marks : 70***

Instructions to the candidates:

1) ***Answer Q1 or Q2, Q3 or Q4, Q5 or Q6, Q7 or Q8.***
2) ***Neat diagrams must be drawn wherever necessary.***
3) ***Figures to the right indicate full marks.***
4) ***Assume Suitable data if necessary.***

Q1) a) Explain the colour code of pipeline carrying utilities. **[6]**

b) Explain the procedure to prepare a bill of material. **[6]**

b) Discuss the different steps of process piping design. **[6]**

OR

Q2) a) Draw a symbolic representation of **[6]**

i) Control ball valve

ii) Thermowell and

iii) Check valve

iv) Batch reactor

v) End connection

vi) Butterfly valve

b) Comment expansion and contraction of piping. **[6]**

c) Discuss the different steps of process piping design. **[6]**

Q3) a) Illustrate about the necessity of plant maintenance. **[6]**

b) What are the different factor consider for process selection? **[4]**

c) Write objectives and importance of plant maintenance. **[7]**

OR

P.T.O.

Q4) a) What are the disadvantages of corrective maintenance? Discuss. **[6]**

b) Write a short note on: Planning and scheduling about maintenance in biotech industry. **[5]**

c) Discuss about plant start up procedure and commissioning objective. **[6]**

Q5) a) Comment on Taxes and insurance **[8]**

b) Write a detail note on: **[10]**

i) Alternative investments and

ii) Practical factors in alternative-investment and Replacement analysis.

OR

Q6) a) Enlist different methods used for determining depreciation. Discuss about any one method. **[9]**

b) Draw and explain the tree diagrams showing cash flow for industrial process. **[9]**

Q7) a) State the methods used for profitability evaluation. Explain any one.**[10]**

b) Discuss about CPM and PERT technique. **[7]**

OR

Q8) a) Discuss about the evaluation of total product cost considering general expenses. **[9]**

b) Explain the payback period method used to calculate the profitability.**[8]**



Total No. of Questions : 8]

SEAT No. :

P6499

[Total No. of Pages : 2

[6181]-42
B.E. (Biotechnology)
MOLECULAR DIAGNOSTICS
(2019 Pattern) (Semester - VIII) (Elective - V) (415473B)

Time : 2½ Hours] ***[Max. Marks : 70***

Instructions to the candidates:

1) ***Solve Q.1 or Q.2, Q.3 or Q.4, Q.5 or Q.6, Q.7 or Q.8.***
2) ***Figures to the right indicate full marks.***

Q1) a) What is the principle of immunoassays? Write principles and applications of ODD. **[9]**

b) Explain the significance of Human Leukocyte Antigens (HLA) typing. **[9]**

OR

Q2) a) What are monoclonal antibodies? How MABs used in diagnostics? Give examples. **[9]**

b) Describe step-wise process of sandwich ELISA assay and add a note on its diagnostic applications. **[9]**

Q3) a) What is the DNA based method of GMO detection? Give one example. **[9]**

b) Give principle and methodology for rapid detection of viral pathogens. **[8]**

OR

Q4) a) Design a diagnostic model to detect foodborne bacterial pathogens. **[9]**

b) What are the different traditional methods for identification and diagnosis of Infectious Diseases? **[8]**

Q5) a) Draw and explain *In-situ* hybridization techniques in genetic disease/disorder diagnosis. **[10]**

b) What is sickle cell anemia? Describe techniques for the detection of Sickle Cell Disease. **[8]**

OR

P.T.O.

Q6) a) What are the methods of prenatal diagnosis? Give different methods with its applications. **[10]**

b) Short note on

i) Singnle gene Disorders and

ii) Chromosomal Disorders **[8]**

Q7) a) Describe advantages of NGS approaches to studying virulence as compared to traditional methods. **[8]**

b) Write an essay on Transcriptomics technologies for disease diagnostics. **[9]**

OR

Q8) a) What is an enzyme biosensor? Explain working principle of Glucose Biosensor. **[8]**

b) What is the lab-on-a-chip method? Explain working principle of microfluidic lab-on-a-chip devices. **[9]**

Total No. of Questions : 8]

SEAT No. : ____

P6500

[Total No. of Pages : 2

[6181]-43

B.E.

BIOTECHNOLOGY

Bio-Therapeutics Technology

(2019 Course) (Elective-V) (Semester-VIII) (415473 C)

Time : 2½ Hours] ***[Max. Marks : 70***

Instructions to the candidates:

1) ***Solve Q.1 or Q.2, Q3 or Q4, Q5 or Q6, Q7 or Q8.***
2) ***Figures to the right indicate full marks.***
3) ***Assume suitable data if necessary.***

Q1) a) What are monoclonal antibodies? Discuss their applications in diagnostics. **[9]**

b) Explain with the help of the diagram the production of tPA from milk of transgenic goat. **[9]**

OR

Q2) a) Write a note on characterization of expressed recombinant proteins. **[9]**

b) Discuss the methods used for gene transfer in plants. **[9]**

Q3) a) How will you detect impurities like DNA, Endotoxins and proteins in your Biotherapeutic product. **[9]**

b) With the help of a flow chart discuss the development of master and working cell bank. **[8]**

OR

Q4) a) Giving importance enlist the rage of QC tests carried on typical biopharmaceuticals. **[9]**

b) You have manufactured an injectable Biotherapeutic product. How will you ensure absence of endotoxins in it. **[8]**

Q5) a) Enlist the routes of drug administration and give examples of formulations. **[8]**

b) Write notes on -(Five marks each)

i) Liposomes,

ii) Semi solid dosage forms **[10]**

OR

P.T.O.

Q6) a) Write a note on "Transdermal drug delivery. **[6]**

b) What are physical stability Issues and Chemical stability Issues? **[6]**

c) Write a note on nanoparticles for drug delivery. **[6]**

Q7) a) Write a note on IPR, Trademarks and trade secrets. Give Appropriate examples. **[8]**

b) Describe the partial organization structure of FDA and responsibilities of FDA. **[9]**

OR

Q8) a) With the help of flow diagram give Biotechnology Industry organization. **[8]**

b) Describe various phases of clinical trials and discuss the objective of the phases. **[9]**



Total No. of Questions : 8]

SEAT No. :

P6501

[Total No. of Pages : 2

[6181]-44
Final Year B. Tech
BIOTECHNOLOGY
Management and Entrepreneurship
(2019 Course) (Semester - VIII) (Elective - VI) (415474 A)

Time : 2½ Hours] *[Max. Marks : 70*

Instructions to the candidates:

1) ***Answer Q.1 or Q.2, Q.3 or Q.4, Q.5 or Q.6, Q.7 or Q.8.***
2) ***Neat diagrams must be drawn wherever necessary.***
3) ***Figures to the right side indicate full marks.***
4) ***Assume suitable data, if necessary.***

Q1) a) What is a leadership style? Discuss. **[4]**

b) Comment on: The benefits that occurred by establishing and maintaining strong coordination mechanisms. **[7]**

c) Explain the meaning and importance of communication in detail. **[7]**

OR

Q2) a) What is the meaning of directing in the context with organizational management? **[6]**

b) State the different methods used for coordinating activities within an organization and explain any one method. **[6]**

c) Why is coordination important in the context of organizational management? Discuss. **[6]**

Q3) a) What is the role of entrepreneurs in economic development? Discuss. **[7]**

b) Discuss in detail the types entrepreneur. **[10]**

OR

Q4) a) Define entrepreneurship and also discuss about the achievements of women as entrepreneurs. **[8]**

b) Write a detail note on intrepreneurs. **[9]**

P.T.O.

Q5) a) What is the role of small scale industry in Economic Development? State its advantages. **[9]**

b) Write a short note on : **[9]**

i) Ancillary Industry

ii) Tiny Industry

OR

Q6) a) What are the objectives and scope of small scale industries? Discuss in detail. **[9]**

b) Discuss in detail the functions of the government policy towards small scale industry. **[9]**

Q7) a) Discuss in detail about common mistakes done by entrepreneur in project formulation. **[8]**

b) What is network analysis and how does it relate to project management? Discuss. **[9]**

OR

Q8) a) What is project report? Discuss its significance in details. **[8]**

b) Write a details note on : Guidelines by Planning Commission for Project report. **[9]**

Total No. of Questions : 8]

SEAT No. :

P6502

[Total No. of Pages : 2

[6181]-45
B.E.
BIOTECHNOLOGY
Intellectual Property Rights (IPR)
(2019 Pattern) (Semester - VIII) (Elective - VI) (415474 B)

Time : 2½ Hours] *[Max. Marks : 70*

Instructions to the candidates:

1) ***Answer Q.1 or Q.2, Q.3 or Q.4, Q.5 or Q.6, Q.7 or Q.8.***
2) ***Neat diagrams must be drawn wherever necessary.***
3) ***Figures to the right side indicate full marks.***
4) ***Use of calculator is allowd.***
5) ***Assume suitable data if necessary.***

Q1) Answer the following. **[18]**

a) What are the different types of trademark? What are the different ways to register a trademark?

b) What does registered trademark contains? What are the functions of a trademark?

OR

Q2) Answer the following. **[18]**

a) Who can apply for a trademark? How are trademark rights acquired?

b) Enlist nine protectable matter under trademark.

Q3) Answer the following. **[17]**

a) What types of information can be trade secrets? How do you determine if information is a trade secret?

b) What types of conduct are considered unfair competition? What are the legal remedies for unfair competition?

OR

P.T.O.

Q4) Answer the following. **[17]**

a) What are the different ways that trade secrets can be misappropriated? What are the legal remedies for misappropriation of trade secrets?

b) What are the legal remedies for violations of the right of publicity? What is misappropriation of trade secrets?

Q5) Answer the following. **[18]**

a) What are the different types of copyright infringement? What are the penalties for copyright infringement?

b) What is copyright in literary, dramatic, and musical works?

OR

Q6) Answer the following. **[18]**

a) What Cannot be copyrighted in India? Write about author's special right in copyright.

b) How the cinematography films are copyrighted? What is the process for copyright registration?

Q7) Answer the following. **[17]**

a) What is a geographical indication? How is a geographical indication different from a trade mark?

b) List out the examples of possible Indian Geographical Indications?

OR

Q8) Answer the following. **[17]**

a) Can GI Registration be done in the name of individual producer? Explain

b) Discuss the procedure for registration of geographical indications?

Total No. of Questions : 8]

SEAT No. :

P-6503

[Total No. of Pages : 2

[6181]-51

B.E. (Chemical Engineering)

PROCESS DYNAMICS AND CONTROL

(2019 Pattern) (Semester - VII) (409341)

Time : 2½ Hours] ***[Max. Marks : 70***

Instructions to the candidates:

1) ***Answer Q.1 or Q.2, Q.3 or Q.4, Q.5 or Q.6, Q.7 or Q.8.***
2) ***Neat diagrams must be drawn wherever necessary.***
3) ***Figures to the right side indicate full marks.***
4) ***Assume Suitable data, if necessary.***

Q1) a) What is root locus diagram? Explain in detail steps used to draw it. **[9]**

b) Draw root locus of the control system with following transfer function **[9]**

$G(S)H(S) = K/(S(S+1)(S+5)$

OR

Q2) a) What is Routh Hurwitz Criteria? Explain its procedure used to identify stability of the control system. **[9]**

b) Consider the feedback control system with following characteristic equation. Use Routh Hurwitz criteria to find out the stability of the given system. **[9]**

$S^3 + 2S^2 + (2+Kc)S + (Kc/\tau_1) = 0$

Q3) a) What is Bode plot? Explain. **[8]**

b) What is Nyquist plot? Explain. **[9]**

OR

Q4) a) What is Gain Margin? Explain. **[4]**

b) What is Phase Margin? Explain. **[4]**

c) What is Ziegler Nicolas tuning technique? Explain. **[9]**

P.T.O.

Q5) a) What is Model-reference adaptive control? Explain with suitable diagram and example. **[9]**

b) What is Inferential control? Explain with suitable diagram and example.**[8]**

OR

Q6) a) What is Cascade Control? Explain with neat diagram and example. **[9]**

b) What is feedforward Control? Explain with neat diagram and example.**[8]**

Q7) a) What is digital Control? Explain. **[4]**

b) What is Analog to digital Converter? Explain. **[5]**

c) What is Digital to Analog converter? Explain. **[5]**

d) Write short note on Multiplexer. **[4]**

OR

Q8) a) What are various components of digital computer? Enlist and explain each. **[9]**

b) Explain hardware components of digital control loop with neat diagram.**[9]**

Total No. of Questions : 8]

SEAT No. :

P-6504

[Total No. of Pages : 2

[6181]-52

B.E. (Chemical Engineering)

CHEMICAL REACTION ENGEERING - II

(2019 Pattern) (Semester - VII) (409342)

Time : 2½ Hours] ***[Max. Marks : 70***

Instructions to the candidates:

1) ***Answer Q.1 or Q.2, Q.3 or Q.4, Q.5 or Q.6, Q.7 or Q.8.***
2) ***Neat diagrams must be drawn wherever necessary.***
3) ***Use of logarithmic tables slide rule, Mollier charts, electronic pocket calculator and steam tables is allowed.***
4) ***Assume Suitable data, if necessary.***

Q1) a) Derive the Langmuir adsorption isotherm with suitable assumptions. **[9]**

b) Derive the BET equation for determination of surface area of catalyst. **[9]**

OR

Q2) a) Explain the major steps involved in the preparation of the catalyst. **[9]**

b) Explain the pore volume distribution in porous catalyst. **[9]**

Q3) Derive the expression for effectiveness factor of single cylindrical pore of the catalyst. And also describe the effect of Thiele modulus for strong pore resistance and negligible pore resistance. **[18]**

OR

Q4) a) The observed rate using a cube of 2 cm catalytic pallet 10^{-3}mo1/cm^3sec. Calculate the value of K (1st order reaction rate constant). The effective diffusivity is 0.0l cm^2/sec and C_{As} = 1 mol/cm^3 pallet. **[9]**

b) Explain the selectivity for a porous catalyst in parallel and series catalytic reaction. **[9]**

P.T.O.

Q5) a) Explain the experimental method for finding rates of fluid-solid catalyzed reactions. **[9]**

b) The following mechanism has been proposed for a catalytic reaction:

$$A_{(g)} + B_{(g)} \rightarrow C_{(g)}$$

i) $A_{(g)} + X == AX$

ii) $AX + B_{(g)} == CX$

iii) $CX == C_{(8)} + X$

Where, X indicates an active site on the catalyst. Derive an expression for the rate of reaction if the surface reaction step is a rate controlling.**[9]**

OR

Q6) a) What are the different steps involved in solid catalyzed reaction? Give the suitable example. **[9]**

b) The catalytic reaction $A \rightarrow 4R$ is run at 3.2 atm and 100 C in tubular reactor which contains 0.01 kg of catalyst and uses a feed consisting of partially converted product of 20 lit/hr of pure A and following data was recorded. Determine the rate equation for this reaction.

C_{Ain}, mol/lit	0.1	0.08	0.06	0.04	
C_{Aout}, mol/hr.kg	0.084	0.070	0.055	0.038	**[9]**

Q7) a) Derive the M-M kinetic equation. **[8]**

b) Explain the fluidized bed reactor in detail **[8]**

OR

Q8) a) Illustrate the features of M-M kinetic equation **[8]**

b) Explain the inhibition in the enzyme catalyzed reaction. **[8]**

Total No. of Questions : 8]

SEAT No. :

P6505

[Total No. of Pages : 2

[6181]-53

B.E. (Chemical)

CHEMICAL ENGINEERING DESIGN

(2019 Pattern) (Semester - VII) (409343)

Time : 2½ Hours] *[Max. Marks : 70*

Instructions to the candidates:

1) ***Answer Q1 or Q2, Q3 or Q4, Q5 or Q6, Q7 or Q8.***
2) ***Figures to the right indicate full marks.***
3) ***Neat diagrams must be drawn wherever necessary***
4) ***Assume suitable data, if necessary***

Q1) a) Explain the step wise design procedure of shell and tube heat exchanger with neat diagram. **[9]**

b) Discuss plate type of heat exchanger with neat sketch. **[9]**

OR

Q2) 0.8 kg/sec of furnace oil is to be heated from 10 ºC to 90 ºC in a shell and tube heat exchanger. Heating is done by steam available at 120°C. Oil is circulated through the tubes while steam is circulated in the shell. Tubes of 16.5 mm inside diameter and 19mm Outside diameter are available. Length of tube= 3.0 m. **[18]**

The Film coefficient of heat transfer for oil is 90 W/m^2 k while the film coefficient of heat transfer for condensing steam is 7400 W/m^2 k

Density of the furnace oil = 900 kg/m^3

Specific heat of the furnace oil = 1970 J/Kg k.

Fouling resistance for the furnace oil = 0.0009 m^2k/W

Fouling resistance for steam side = 0.00005 m^2k/W

Suggest a suitable design of the shell and tube heat exchanger.

Maximum oil velocity that can be used is 0.05 m/sec.

Estimate the number of passes on the tube side required in the heat exchanger.

Q3) a) Explain in which cases packed columns are preferred over plate columns.**[7]**

b) Describe the Van Winkle method for predicting plate efficiency. **[10]**

OR

P.T.O.

Q4) a) What is the function of weir on a plate and what is effect of weir height on column performance? **[7]**

b) Explain the estimation of packed bed height for an absorption column with all the relevant equations. Discuss the general guidelines for the choice between plate and packed columns. **[10]**

Q5) a) Explain Onda's method for prediction of height of transfer units. **[9]**

b) What is the significance of mGm/Lm in the design of packed column? **[9]**

OR

Q6) a) Explain Cornell's method for prediction of height of transfer units in details. **[9]**

b) Explain the characteristics & functioning of **[9]**

i) Liquid distributors.

ii) Liquid redistributors.

iii) Supports for packing's.

Q7) Water flows through a pipeline @ 1 kg/s., over a distance or 2 km. The impressed head of water = 9.8 m. What is the diameter of pipeline if ρ = 1000kg/m^3 & μ=1mNs/m^2 **[17]**

OR

Q8) a) What are the different types of gaskets? **[7]**

b) Write short notes on **[10]**

Material for corrosion resistance

Pipe fittings

Pipe supports

Gasket Types, material and selection criteria



Total No. of Questions : 8]

SEAT No. :

P-6506

[Total No. of Pages : 2

[6181]-54

B.E. (Chemical)

ENVIRONMENTAL ENGINEERING

(2019 Pattern) (Semester - VII) (409344A) (Elective - III)

Time : 2½ Hours] ***[Max. Marks : 70***

Instructions to the candidates:

1) ***Neat diagrams must be drawn wherever necessary.***
2) ***Figures to the right indicate full marks.***
3) ***Assume suitable data, if necessary.***
4) ***Attempt Q1 OR Q2, Q3 OR Q4, Q5 OR Q6, Q7 OR Q8.***

Q1) a) Explain with a neat sketch plate type of electrostatic precipitator. **[9]**

b) Explain the different methods of removing SOx and NOx. **[9]**

OR

Q2) a) Explain with a neat sketch Construction and working of Cyclone separator. **[9]**

b) Explain with a neat sketch fabric filters. **[9]**

Q3) a) Write note on following water pollutants. **[12]**

i) Thermal Discharge

ii) Plant nutrient

iii) Detergent

iv) Sediments

b) What is Chemical Oxygen Demand? How it is determined? **[5]**

OR

P.T.O.

Q4) A large stream has a rate of reaeration K2 = 0.55 and a rate of deoxygenation Kl = 0.23 per day. The DO deficit of the mixing of stream water and waste water at the point of reference, DO is 4.0 mg/lit and the ultimate BOD of the waste Lu is 75 mg/Lit. **[17]**

Calculate :

a) The DO deficit at a point one day distant from the point of reference

b) The critical deficit and the critical time.

Q5) Explain with a neat sketch any two types of sedimentation tank used in wastewater treatment. **[18]**

OR

Q6) Explain with a neat sketch Trickling filter used for effluent treatment. **[18]**

Q7) State the need of Nitrogen removal. Explain in detail two methods of nitrogen removal. **[17]**

OR

Q8) Write and explanatory note on : **[17]**

a) Air Stripping

b) Incineration

⌘⌘⌘

Total No. of Questions : 8]

SEAT No. :

P-6507

[Total No. of Pages : 2

[6181]-55

B.E. (Chemical)

MEMBRANE TECHNOLOGY

(2019 Pattern) (Semester - VII) (409344B) (Elective - III)

Time : 2½ Hours] ***[Max. Marks : 70***

Instructions to the candidates:

1) ***Answer Q1 or Q2, Q3 or Q4, Q5 or Q6, Q7 or Q8.***
2) ***Neat diagrams must be drawn wherever necessary.***
3) ***Figures to the right side indicate full marks.***
4) ***Assume suitable data wherever necessary.***

Q1) a) What is Knudsen diffusion? Explain in details about Knudsen diffusion and surface diffusion through microporous membranes. **[10]**

b) Explain in details about pore flow theory for microfiltration membrane. **[7]**

OR

Q2) a) Describe in details relationship between structure - permeability. **[10]**

b) Derive an equation for transport through micro porous and dense membranes. **[7]**

Q3) a) What is cross flow and dead end filtration of the membrane? Explain in details with suitable examples. **[9]**

b) Explain in details about membrane fouling and method for reducing fouling. **[8]**

OR

Q4) a) Define reverse osmosis? Explain in details with suitable examples. **[9]**

b) What is concentration polarisation? Explain in details about liquid polarisation. **[8]**

P.T.O.

Q5) a) Explain in details any one application of ultrafiltration membrane in food industry. **[10]**

b) What is thermal desalination and membrane desalination? Explain in short application of reverse osmosis for sea water desalination. **[8]**

OR

Q6) a) What is molecular cut off of the membrane? Explain in details application of ultrafiltion membrane for cheese production. **[10]**

b) What is nanofitration membrane? Explain in details application for organic solvent separation. **[8]**

Q7) a) What is liquid membrane? Explain in details any one application. **[10]**

b) Explain in details application of membrane for oxygen/nitrogen separation. **[8]**

OR

Q8) a) What is Electro dialysis? Explain in details any one application. **[10]**

b) Explain in details application of membrane for hydrogen separation. **[8]**

Total No. of Questions : 8]

SEAT No. :

P-6508

[Total No. of Pages : 2

[6181]-56

B.E. (Chemical)

INDUSTRIAL PIPING

(2019 Pattern) (Semester - VII) (409344C) (Elective - III)

Time : 2½ Hours] *[Max. Marks : 70*

Instructions to the candidates :

1) ***Answer Q.No.1 or Q.2, Q.3 or Q.4, Q.5 or Q.6, Q.7 or Q.8.***
2) ***Figures to the right indicate full marks.***
3) ***Neat diagram must be drawn wherever necessary.***
4) ***Assume suitable data, if necessary.***

Q1) a) Describe the cathode protection for piping systems. **[9]**

b) Explain the piping layout consideration of **[9]**

i) Heat Exchangers

ii) Storage Tank

OR

Q2) a) Discuss piping isometrics and BOM. **[9]**

b) Which are the factors considered when the designer is locating equipment in the plot plan? **[9]**

Q3) a) Write a note on pipeline storage capacity. **[9]**

b) Write detailed design procedure for dispersed flow. **[8]**

OR

Q4) a) Discuss the various steps and design parameters for slurry pipelines. **[9]**

b) Discuss the complex pipelines in series arrangement with typical examples. **[8]**

Q5) a) Discuss piping arrangements and factors considered in the piping design of the heat exchanger. **[9]**

b) Discuss piping design strategies for corrosive materials. **[8]**

OR

P.T.O.

Q6) a) Describe the various steps for designing utility piping. **[9]**

b) Discuss various empirical correlations for the flow of oil. **[8]**

Q7) a) An idealized centrifugal pump (blade outer radius of 50 mm) consumes 2 kW power while running at 3000 rpm. The entry of the liquid into the pump is axial and the exit from the pump is radial with respect to the impeller. If the losses are neglected, calculate the mass flow rate of the liquid through the pump kg/s. **[9]**

b) Derive the relation for the critical radius of insulation of a sphere having radius R. **[9]**

OR

Q8) Write a short note on : **[18]**

a) Insulation for piping system

b) Purpose and selection of insulation

c) Critical thickness of insulation

▽▽▽▽

Total No. of Questions : 8]

SEAT No. :

P-6509

[Total No. of Pages : 2

[6181]-57

B.E. (Chemical)

PETROLEUM REFINING

(2019 Pattern) (Semester-VII) (409344D) (Elective - III)

Time : 2½ Hours] *[Max. Marks : 70*

Instructions to the candidates :

1) ***Answer Q.No.1 or 2, 3 or 4, 5 or 6, 7 or 8.***
2) ***Figures to the right indicate full marks.***
3) ***Neat diagram must be drawn wherever necessary.***
4) ***Assume suitable data if necessary.***

Q1) a) What is the reforming process? Discuss the mechanism and working of the reforming process with a neat schematic diagram. **[9]**

b) What are the principle reactions (with examples) happening in the catalytic cracking process? What is the most undesirable reaction in catalytic cracking and write the reaction mechanism. **[8]**

OR

Q2) a) Explain the operation and working of the thermal cracking process with a typical diagram. **[9]**

b) What is the mechanism of the hydrocracking process? Describe the hydrocracking process with a neat schematic diagram. **[8]**

Q3) a) What are different refining operations? Describe the deasphalting process with a neat schematic diagram. **[9]**

b) Discuss various additives for lube oil. **[8]**

OR

Q4) a) Describe the dewaxing process with a typical diagram. **[10]**

b) What are the different applications of bitumen? Explain the manufacturing of bitumen with a schematic diagram. **[7]**

P.T.O.

Q5) a) What are various supporting processes used in the refinery? Discuss fluid catalytic cracking techniques with a schematic diagram. **[12]**

b) Why sulfur is undesirable in the refinery? Describe sulfur recovery in the refinery with a neat schematic diagram. **[6]**

OR

Q6) a) Discuss hydro refining techniques with a schematic diagram. **[9]**

b) Describe floating roofed tank arrangements for storage of crude oil. **[9]**

Q7) a) What are the recent advances in the transportation techniques used in refineries? **[9]**

b) What safety aspects are practiced in the refineries. **[9]**

OR

Q8) a) Explain the effect of additives on the quality of refinery products. **[9]**

b) Discuss various housekeeping techniques used in refinery. **[9]**



Total No. of Questions : 8]

SEAT No. :

P-6510

[Total No. of Pages : 2

[6181]-58

B.E. (Chemical)

CHEMICAL PROCESS SYNTHESIS

(2019 Pattern) (Semester - VII) (409345A) (Elective - IV)

Time : 2½ Hours] ***[Max. Marks : 70***

Instructions to the candidates:

1) ***Answer five questions***
2) ***Neat diagrams must be drawn wherever necessary.***
4) ***Figures to the right indicate full marks.***
5) ***Use of logarithmic tables, electronic pocket calculator and steam tables is allowed.***
6) ***Assume suitable data, if necessary.***

Q1) a) Explain steam distillation with suitable example. **[8]**

b) Explain Azeotropic distillation with suitable example. **[9]**

OR

Q2) Explain the following : **[17]**

a) Electrostatic Precipitation.

b) Flotation.

Q3) Explain with sketches the concept of heat integration of sequences of simple Distillation Column. **[17]**

OR

Q4) a) Discuss integration of refrigeration cycle. **[8]**

b) Explain threshold problems in integration of heat pump network. **[9]**

P.T.O.

Q5) Write short notes on : **[18]**

a) Process constraints.

b) Utility selection.

OR

Q6) Write short note on : **[18]**

a) Energy Targets.

b) Composite Curves.

Q7) a) Explain the attenuation of hazardous materials on human health. **[9]**

b) Write in brief role of safety engineer in chemical industry. **[9]**

OR

Q8) Write short notes on : **[18]**

a) Fire Hazards in Chemical Industry.

b) Hazard triangle.

⌘⌘⌘

Total No. of Questions : 8]

SEAT No. :

P-8771

[Total No. of Pages : 2

[6181]-59A

B.E. (Chemical)

INDUSTRIAL MANAGEMENT & ENTREPRENEURSHIP

(2019 Pattern) (Semester - VII) (409345B) (Elective - IV)

Time : 2½ Hours] *[Max. Marks : 70*

Instructions to the candidates:

1) ***Answer Q1 or Q2, Q3 or Q4, Q5 or Q6, Q7 or Q8.***
2) ***Neat diagrams must be drawn wherever necessary.***
3) ***Figures to the right indicate full marks.***
4) ***Assume suitable data, if necessary.***

Q1) a) Explain the role of EDII and NIESBUD in entrepreneurship development. **[9]**

b) Describe the role of central and state government in promoting entrepreneurship development. **[9]**

OR

Q2) a) Write an explanatory note on the successful entrepreneurial ventures development. **[9]**

b) Write a note on fiscal and tax concessions available for entrepreneurship development. **[9]**

Q3) a) Write an explanatory note about five competitive forces (Porter). **[9]**

b) Explain verbal and nonverbal communication skills in managerial work. **[8]**

OR

Q4) a) Discuss the management roles and theories of Henry Mintzberg. **[9]**

b) Explain the hierarchy of needs given by Abraham Maslow. **[8]**

Q5) a) Elaborate on computer-based project management. **[9]**

b) Describe the Six Sigma concept and enlist its requirements and advantages **[8]**

P.T.O.

OR

Q6) a) Discuss the concept of adding resources to the model for project development. **[9]**

b) Elaborate on handling multiple projects with typical examples. **[8]**

Q7) a) Describe the role of marketing in society and the firm. **[9]**

b) Describe the Business-to-Business marketing strategies in chemical industry. **[9]**

OR

Q8) Write a note on following : **[18]**

a) Sampling design and data collection methods

b) Interpretation of the data for marketing decisions

c) Product and Brand Management



Total No. of Questions : 8]

SEAT No. :

P-6512

[Total No. of Pages : 2

[6181]-60

B.E. (Chemical)

GREEN TECHNOLOGY

(2019 Pattern) (Semester - VII) (409345C) (Elective - IV)

Time : 2½ Hours] *[Max. Marks : 70*

Instructions to the candidates :

1) ***Answer five questions.***
2) ***Neat diagrams must be drawn wherever necessary.***
3) ***Figures to the right indicate full marks.***
4) ***Use of logarithmic tables, electronic pocket calculator and steam tables is allowed.***
5) ***Assume suitable data, if necessary.***

Q1) a) Explain Integrated Pollution Prevention and its Control in detail. **[8]**

b) The Importance of Measurement in Production of Safer Gasoline. **[8]**

OR

Q2) Write notes on : **[16]**

a) Green Process Metrics.

b) Eco-management.

Q3) Explain with example and applications of Supercritical Fluids, Supercritical Carbon Dioxide, Supercritical Water. **[18]**

OR

Q4) a) Discuss the Ionic Liquids as Catalysts in Chemical industry with example. **[9]**

b) Explain Chemicals from renewable feed stocks in detail. **[9]**

Q5) a) Explain the Photochemical Reactions with example. **[9]**

b) Explain Advantages and Challenges Faced by Photochemical Processes. **[9]**

OR

P.T.O.

Q6) a) Explain the concept of Designing greener processes for Conventional Reactors. **[9]**

b) Explain the Chemistry Using Microwaves with example in detail. **[9]**

Q7) a) Explain the Eco-friendly Pesticides, Insecticides. **[9]**

b) Write in brief Radical Process with example. **[9]**

OR

Q8) a) Explain overall Greening of Acetic Acid Manufacture in detail. **[9]**

b) Explain in detail Dyeing industry to be Green. **[9]**

▽▽▽▽

Total No. of Questions : 8]

SEAT No. : ____

P-6513

[Total No. of Pages : 2

[6181]-61
B.E. (Chemical)
ADVANCED SEPARATION PROCESSES - I
(2019 Pattern) (Semester - VII) (Elective-IV) (409345D)

Time : 2½ Hours] ***[Max. Marks : 70***

Instructions to the candidates :

1) ***Answer Q1or Q2, Q3 or Q4, Q5 or Q6, Q7 or Q8***
2) ***Neat diagrams must be drawn wherever necessary.***
3) ***Figures to the right side indicate full marks.***
4) ***Assume Suitable data if necessary***

Q1) a) Explain reactive extraction process in detail. **[9]**

b) Explain Reactive crystallization in detail. **[9]**

OR

Q2) a) Explain Reactive distillation in detail. **[9]**

b) Explain characteristics of complexing agents used in chemical complexation. **[9]**

Q3) a) Explain the principle, working and application of reverse osmosis techniques. **[9]**

b) Explain fouling of membrane and concentration polarization. Discuss the methods of controlling the fouling. **[8]**

OR

Q4) a) Explain the principle and working of ultrafiltration. Discuss its applications. **[9]**

b) What is cross flow filtration? What are its advantages over dead end filtration? **[8]**

Q5) a) Explain the detail working of Chromatography. **[9]**

b) Explain the concept and general principles of adsorption. **[9]**

OR

P.T.O.

Q6) a) Write short note on **[9]**

i) Temperature swing adsorption

ii) Pressure swing adsorption

b) Write down the applications of chromatography in separation of enzymes, proteins and industrial examples in detail. **[9]**

Q7) a) Explain working principles of zone electrophoresis. **[9]**

b) Write down applications of froath flotation techniques. **[8]**

OR

Q8) a) Write short note on **[9]**

i) Zone refining,

ii) Molecular sieves

b) What is principle and working of ultra centrifugation and discuss its application. **[8]**



Total No. of Questions : 8]

SEAT No. :

P 6514

[Total No. of Pages :1

[6181] -62
B.E. (Chemical)
Process modeling & Simulation
(2019 Pattern) (Semester-VIII) (409349)

Time : 2½ Hours] *[Max. Marks : 70*

Instructions to the candidates:

1) ***Answer Q1 or Q2, Q3 or Q4, Q5 or Q6, Q7 or Q8.***
2) ***Neat diagrams must be drawn wherever necessary.***
3) ***Figures to the right indicate full marks.***
4) ***Assume suitable data if necessary.***

Q1) Develop model for Concentric Tube Heat Exchanger. **[18]**

OR

Q2) Develop modeling equations for shell and tube heat exchanger. **[18]**

Q3) Derive mathematical model for ideal binary distillation column. Use notations as usual. Draw figure. **[17]**

OR

Q4) Develop model for single component vaporizer considering liquid phase dynamic models. Write down assumptions. **[17]**

Q5) Develop mathematical model for bioreactor. **[18]**

OR

Q6) Develop mathematical model for bubble column reactor. **[18]**

Q7) Evaluate the density of Van der Waal's equation of Cl_2 gas at temperature 230ºC and 150 atm. Critical temperature is 76.1 atm. Solve by Newton-Raphson method. **[17]**

OR

Q8) Calculate heat added for kmol of ethylene using following equation from 303 k to 523 k **[17]**

$$C_p^o = 12.184 + 3.879 \text{ X } 10^{-3} \text{ T} - 2.58 \text{ X } 10^5 / \text{T}^2$$

where Cp is in kcal/.kmol k.

Solve by analytically and verify your answer with Simpson's 1/3rd rule.



Total No. of Questions: 8]

SEAT No. : ____

P6515

[Total No. of Pages : 3

[6181]-63
B.E. (Chemical)
PROCESS ENGINEERING COSTING & PLANT DESIGN
(2019 Pattern) (Semester-VIII) (409350)

Time : 2½ Hours] ***[Max. Marks : 70***

Instructions to the candidates:

1) ***Answer Q1 or Q2, Q3 or Q4, Q5 or Q6, Q7 or Q8.***
3) ***Neat diagrams must be drawn wherever necessary.***
3) ***Figures to the right indicate full marks.***
4) ***Use of electronic pocket calculator is allowed.***
5) ***Assume Suitable data if necessary.***

Q1) a) Explain in brief cumulative cash position with the graph showing effects of cash flow with time for an industrial operation. **[8]**

b) A plant is designed to produce 1.2×10^8 kg/yr of an agrochemical. The estimated fixed capital investment is Rs. 1.5×10^9. The working capital is Rs. 2×10^8 and start-up cost (only in the first year of commissioning and to be accounted for in the first year) is Rs. 1.5×10^8

The following cost data are available:

Raw materials: Rs. 0.8/kg product

Labour and utilities etc. : Rs. 0.27/kg product

sellign price of product: Rs. 10/kg

other costs (on per year basis) including maintenance, insurance etc @ 10% of fixed capital.

Indirect cost of administration, R&D, marketing etc. 20% of sale proceeds.

The plant will be fully depriciated over a period of 5 years using the straight line method.

The rate of income tax is 40%

Calculate

i) The net profit at the end of first year

ii) The payout period **[10]**

OR

P.T.O.

Q2) a) Differentiate between fixed-capital investment and working capital. **[6]**

b) Define cost index state its formula and different types. **[6]**

c) An equipment costs Rs. 1,70,000/-and will have a scrap value of Rs. 25,000/-at the end of its useful life of 10 years. If the interest is compounded at 10% per year, what are the cost of replacement, the present worth and the capitalized cost? **[6]**

Q3) a) Define optimization What is the purpose of optimization? **[4]**

b) The following equation shows the effects of the variables x & y on the total cost for a particular operation **[9]**

$$C_T = 2.33x + \frac{11,900}{xy} + 1.86y + 10$$

Determine the values of x & y by analytical method which will give the least total cost

c) State formulae for analyses of cyclic operations at optimum conditions **[4]**

OR

Q4) a) Explain in brief with a neat figure of Break even chart for production schedule. **[8]**

b) Explain in brief optimum production rates in plant operation with an equation to determine the total product cost C_T per unit of production **[9]**

Q5) a) Explain optimum economic pipe diameter **[4]**

b) Explain in brief choice of plate & Packed towers on the basis of costs and profits at optimum conditions. **[8]**

c) Explain major factors that influence plate & column efficiencies to be considered for determination of optimum height of a staged distillation column. **[6]**

OR

Q6) a) Explain in brief Heat exchanger networks as a significant factor in determining the energy efficiency of a process. **[10]**

b) Explain in brief determination of optimum operating time for maximum amount of heat transfer in Evaporator with scale formation. **[8]**

Q7) a) What are applications of Critical path method and Program evaluation and review technique? **[6]**

b) Explain the start-up & shut down procedures of project. **[6]**

c) State the scope for chemical Engineers in process Engineering. **[5]**

OR

Q8) a) Explain in brief factors to be considered in preparation of the plot plan as a proper plant layout **[8]**

b) Describe in brief organization of a Design Report. **[9]**



Total No. of Questions : 8]

SEAT No. :

P6516

[Total No. of Pages : 2

[6181]-64
B.E. (Chemical)
ENERGY AUDIT AND CONSERVATION
(2019 Pattern) (Semester - VIII) (Elective - V) (409351A)

Time : 2½ Hours] *[Max. Marks : 70*

Instructions to the candidates:

1) ***Solve Q.1 or Q.2, Q.3 or Q.4, Q.5 or Q.6, Q.7 or Q.8.***
2) ***Neat diagrams must be drawn wherever necessary.***
3) ***Figures to the right indicate full marks.***
4) ***Assume suitable data if necessary.***

Q1) After successfully carrying out energy audit, energy auditor reports to the top management for effective communication and its implementation. Write a typical energy audit reporting content on any chemical process industry of your choice. **[18]**

OR

Q2) What informations are collected during the detailed audit? Explain with a suitable example, the significance of audit report, for post monitoring of energy conservation project. **[18]**

Q3) It is often said that proper forecasting helps in profit making of any industry support your views with proper case study. **[17]**

OR

Q4) What is Forecasting? What are its benefits? Explain Time series quantitative method of Demand Forecasting in detail using proper example. **[17]**

Q5) a) Distinguish between Renewable and Non-Renewable sources of Energy. **[9]**

b) Explain the benefits of using Renewable sources of energy in Chemical Industry. **[9]**

OR

P.T.O.

Q6) How can Chemical engineers in corporate climate change projectors into the planning and design of infrastructure projects to ensure long term resilience.**[18]**

Q7) What are the Boilers? Write few lines on Energy Performance Assessment of Boilers. Explain the purpose and benefits of Performance test in Boilers.**[17]**

OR

Q8) What is Heat Exchange? Write different types of Heat Exchangers used in Chemical Industries. Write the steps involved in Energy performance assessment of Heat Exchanger. **[17]**



Total No. of Questions : 8]

SEAT No. :

P6517

[Total No. of Pages : 2

[6181]-65
B.E. (Chemical)
CHEMICAL PROCESS SAFETY
(2019 Pattern) (Semester - VIII) (Elective - V) (409351 B)

Time : 2½ Hours] ***[Max. Marks : 70***

Instructions to the candidates:

1) ***Solve Q.1 or Q.2, Q.3 or Q.4, Q.5 or Q.6, Q.7 or Q.8.***
2) ***Figures to the right indicate full marks.***
3) ***Neat digrams must be drawn wherver necessary.***
4) ***Assume suitable data, if necessary.***

Q1) a) With the help of diagram, describe the Fire Triangle. **[9]**

b) Withe the help of graph of concentration of flammable liquid Vs. Temperature, Explain various flammability properties of fluid. **[9]**

OR

Q2) a) Describe various steps of Vapor Cloud Explosions. **[9]**

b) Distinguish between fire and explosion. **[9]**

Q3) a) Flammable liquid is being pumped out of a drum into a bucket using a hand pump. Describe an appropriate grounding and bonding procedure.**[9]**

b) Explain working of ventilation and sprinkler systems for preventing fires and explosions. **[8]**

OR

Q4) a) Discuss in brief about explosion proof equipment's and instruments.**[9]**

b) What are the preventive and protective measures to prevent fire in chemical industry. **[8]**

Q5) a) What are the objectives of hazard survey? How these surveys are conducted? **[9]**

b) Explain the stages in hazards identification and risk assessment procedure. **[9]**

OR

P.T.O.

Q6) a) Explain in detail about Process hazards Checklists. **[9]**

b) What is HAZOP? Explain in details. **[9]**

Q7) a) Describe the role of chemical engineers in preventing hazards. **[9]**

b) What is role of computers in Safety Management? **[8]**

OR

Q8) a) Explain emergency shutdown systems. **[9]**

b) Write short note on

i) tackling disasters

ii) plan of emergency **[8]**



Total No. of Questions : 8]

SEAT No. :

P8649

[Total No. of Pages : 2

[6181]-66
B.E. (Chemical Engineering)
COMPUTATIONAL FLUID DYNAMICS
(2019 Pattern) (Semester - VIII) (Elective - V) (409351 C)

Time : 2½ Hours] *[Max. Marks : 70*

Instructions to the candidates:

1) ***Answer Q.1 or Q.2, Q.3 or Q.4, Q.5 or Q.6, Q.7 or Q.8.***
2) ***Neat diagrams must be drawn wherever necessary.***
3) ***Figures to the right indicate full marks.***
4) ***Use of Calculator is allowed.***
5) ***Assume Suitable data if necessary.***

Q1) a) Draw a FVM mesh and explain the process of discretization using FVM. **[9]**

b) Differentiate between SIMPLE, SIMPLEC and SIMPLER algorithms. **[9]**

OR

Q2) a) Explain briefly : **[9]**

i) Conservation

ii) Accuracy

iii) Convergence

iv) Consistency

v) Stability

vi) Transportive-ness

vii) Boundedness

b) What are upwind schemes? Discretize 1-D steady state Diffusion Equation using first order upwind scheme. **[9]**

Q3) a) Derive RANS equations for turbulent flow. **[9]**

b) Explain in detail k- ε models for turbulent modeling. **[8]**

OR

P.T.O.

Q4) a) List down turbulent models and explain one equation models. **[9]**

b) Explain in detail k - ω model for modeling turbulence. **[8]**

Q5) a) What is Multiphase flow modeling. Explain VOF Model in detail. **[9]**

b) What are Euler-Lagrangean Models for multiphase flows? Explain in detail. **[9]**

OR

Q6) a) Give detailed classification of multiphase flows. Explain slug flow pattern for vertical flows. **[9]**

b) Give governing equations for Multiphase flows based on homogeneous and heterogeneous flow considerations. Explain each term involved. **[9]**

Q7) a) What is post processing in CFD Simulation? Explain various results of post processing. **[8]**

b) Give different models for CFD simulation. Explain various boundary conditions. **[9]**

OR

Q8) a) Write ten Applications of CFD simulations. Explain in detail use of CFD in Convective Heat transfer. **[8]**

b) What are various stages of CFD simulations? Explain any one in detail. **[9]**

Total No. of Questions : 8]

SEAT No. : ____

P6518

[Total No. of Pages : 2

[6181]-67

B.E. (Chemical)

ADVANCED MATERIALS

(2019 Pattern) (Semester-VIII) (Elective-V) (409351 D)

Time : 2½ Hours] ***[Max. Marks : 70***

Instructions to the candidates:

1) ***Answer Q.1 or Q.2, Q3 or Q4, Q5 or Q6, Q7 or Q8.***
2) ***Neat diagrams must be drawn wherever necessary.***
3) ***Assume suitable data if necessary.***

Q1) a) Discuss in details advanced powder synthesis techniques used for ceramic materials. **[10]**

b) Explain in details about grain boundary engineering of ceramic materials. **[7]**

OR

Q2) a) Explain in details advanced processing method of ceramic materials.**[10]**

b) What is ceramic materials? Give types and uses of ceramic materials?**[7]**

Q3) a) What are composite materials? Explain in details with suitable examples.**[9]**

b) What is polymerisation? Explain in details about condensation polymerisation. **[8]**

OR

Q4) a) Explain in details factors influencing the properties of composite materials. **[9]**

b) Short notes on.

i) Prepregs.

ii) Fiber winding techniques. **[8]**

P.T.O.

Q5) a) Explain in details with suitable examples fabrication methods of metal composite. **[10]**

b) Discuss in details mechanical behaviour and properties of metal composite materials. **[8]**

OR

Q6) a) Explain in details with suitable examples ceramic composite. **[10]**

b) Short notes on. **[8]**

i) Reinforce ceramics

ii) Crack propagation and mechanical behaviour.

Q7) a) Describe in details fabrication methods and properties of carbon composite. **[10]**

b) Explain in details any one application of carbon composite. **[8]**

OR

Q8) a) What is nanomaterial? Explain in details any one methods of synthesis of nanomaterials. **[10]**

b) Explain in short characterisation of nanomaterials. **[8]**



Total No. of Questions : 8]

SEAT No. :

P6519

[Total No. of Pages : 2

[6181]-68
B.E. (Chemical)
CATALYSIS
(2019 Pattern) (Semester - VIII) (Elective - VI) (409352 (A)) (Theory)

Time : 2½ Hours] *[Max. Marks : 70*

Instructions to the candidates:

1) ***Answer Q.1 or Q.2, Q.3 or Q.4, Q.5 or Q.6, Q.7 or Q.8.***
2) ***Figures to the right indicate full marks.***
3) ***Neat diagrams must be drawn wherever necessary.***
4) ***Use of logarithmic tables, slide rule, Mollier charts, electronic pocket calculator and steam table is allowed.***
5) ***Assume suitable data if necessary.***

Q1) Write short notes on the following. **[16]**

a) Mass transfer in the catalyst.

b) Langmuir Hinshelwood approach.

OR

Q2) Explain the mechanism of adsorption and its isotherms in detail. **[16]**

Q3) a) Explain mass transfer in the catalysis. **[9]**

b) Explain the mechanism of solid - catalyzed reaction in detail. **[9]**

OR

Q4) a) Explain selectivity and effectiveness of catalyst. **[9]**

b) Explain the deactivation of the catalysis. **[9]**

Q5) Give the industrial applications of the zeolites. **[18]**

OR

P.T.O.

Q6) a) Explain the zeolites structure based on the sodalite cage. **[9]**

b) Explain the molecular sieves with industrial application. **[9]**

Q7) a) Explain the method to determine the M-M kinetics constants using the data taken in mixed flow reactor. **[9]**

b) Give the kinetics of competitive inhibition. **[9]**

OR

Q8) a) Explain inhibition in biocatalyst. **[9]**

b) Write short note on lipases and microbes as catalyst. **[9]**

Total No. of Questions : 8]

SEAT No. :

P6520

[Total No. of Pages : 2

[6181]-69
B.E. (Chemical)
NANOTECHNOLOGY
(2019 Pattern) (Semester - VIII) (Elective - VI) (409352 (B))

Time : 2½ Hours] *[Max. Marks : 70*

Instructions to the candidates:

1) ***Answer Q.1 or Q.2, Q.3 or Q.4, Q.5 or Q.6, Q.7 or Q.8.***
2) ***Neat diagrams must be drawn wherever necessary.***
3) ***Figures to the right side indicate full marks.***
4) ***Assume suitable data if necessary.***

Q1) a) Explain characterization technique based on Atomic Force Microscope. **[7]**

b) Explain principle and operation of Transmission electron microscope. **[10]**

OR

Q2) a) What is the basic Principle in Scanning Electron Microscope? How are different from Optical Microscopy- Explain. **[10]**

b) Write a note on X-ray diffraction technique used for nanoparticle characterization? **[7]**

Q3) a) What is doping? Explain types of dopants used in Extrinsic semiconductor? **[7]**

b) What are the properties and advantages of quantum dot and quantum well? **[10]**

OR

Q4) a) Explain in detail the properties of the wave function. **[7]**

b) Discuss about the de Broglie's hypothesis and its application. **[10]**

P.T.O.

Q5) a) What are the factors affecting contact angles and colloidal stability? **[8]**

b) Explain electrical phenomena at interfaces Van der Waals forces between colloidal particles. **[10]**

OR

Q6) a) Write a note on Photocatalysis of Nanostructured material. **[8]**

b) Explain interfacial tension surfaces at equilibrium surface tension measurement. **[10]**

Q7) a) Write short note on: **[8]**

a) Nano clays

b) Self-cleaning materials

b) Discuss Nano-biotechnology with suitable example. **[10]**

OR

Q8) a) Describe the use of Nano electronics with suitable example. **[8]**

b) Explain in detail health and environmental impacts of nanotechnology. **[10]**

Total No. of Questions : 8]

SEAT No. :

P6521

[Total No. of Pages : 2

[6181]-70
B.E. (Chemical)
FUEL CELL TECHNOLOGY
(2019 Pattern) (Semester - VIII) (Elective - VI) (409352C)

Time : 2½ Hours] *[Max. Marks : 70*

Instructions to the candidates:

1) ***Answer Q.1 or Q.2, Q.3 or Q.4, Q.5 or Q.6, Q.7 or Q.8.***
2) ***Figures to the right side indicate full marks.***
3) ***Neat diagrams must be drawn wherever necessary.***
4) ***Assume suitable data if necessary.***

Q1) a) What is reforming? How is ATR i.e. Auto Thermal Reforming used to manufacture hydrogen needed for a fuel cell? Describe its advantages and disadvantages. **[10]**

b) Discuss various hydrocarbon-based fuel cells with typical examples.**[8]**

OR

Q2) a) Describe the working principle of H_2 fuel cell with a typical schematic diagram. **[9]**

b) What are the criteria for selecting anodic materials of a proton exchange membrane fuel cell system. **[9]**

Q3) a) Write a detailed note on steam reforming needed in a hydrogen fuel cell. **[9]**

b) Write a detailed note on the internal reforming needed in a hydrogen fuel cell. **[8]**

OR

Q4) a) Describe in detail the osmotic drag coefficient, back diffusion flux and fuel crossover for PEMFC. **[9]**

b) Describe various anodic catalyst materials used in the construction of a Proton Exchange Membrane Fuel Cell and their possible functions in its working. **[8]**

P.T.O.

Q5) a) Describe with the help of a diagram oxidation reaction on the TPB of an anode made of Ni-YSZ **[9]**

b) Describe the treatment of electrolyte interface for SOFC with a typical schematic diagram. **[8]**

OR

Q6) a) Describe the life cycle analysis of the fuel cell with a neat schematic diagram. **[9]**

b) Describe the concept of an Ohmic over the potential for SOFC. **[8]**

Q7) a) At equilibrium how electric potentials are related to chemical potentials of fuel and oxidizer stream in a fuel cell? Describe their importance in the design of a fuel cell. **[12]**

b) Describe microbial fuel cells with their advantages and limitations. **[6]**

OR

Q8) Write a notes on **[3×6=18]**

a) Recent development in harnessing hydrogen

b) Membrane electrolyte materials

c) impurities reduction in reforming

Total No. of Questions : 8]

SEAT No. :

P6522

[Total No. of Pages : 2

[6181]-71
B.E. (Chemical)
PETROCHEMICAL ENGINEERING
(2019 Pattern) (Semester - VIII) (Elective - VI) (409352 D)

Time : 2½ Hours] *[Max. Marks : 70*

Instructions to the candidates:

1) ***Answer Q.1 or Q.2, Q.3 or Q.4, Q.5 or Q.6, Q.7 or Q.8.***
2) ***Neat diagrams must be drawn wherever necessary.***
3) ***Figures to the right side indicate full marks.***
4) ***Assume suitable data if necessary.***

Q1) With a neat and labeled diagram, explain the production of low molecular weight olefins by hydrocarbon cracking. **[18]**

OR

Q2) List down different furnaces used in petrochemical industry. Explain any 3 in detail. **[18]**

Q3) With a neat and labeled diagram, explain the production of Amines. **[17]**

OR

Q4) With a neat and labeled diagram, explain the production of Ketones. **[17]**

Q5) a) What are the different types of the polymers? Explain in detail. **[8]**

b) Explain in detail the production of polymers through emulsion polymerization. Give examples of polymers produced by the process.**[10]**

OR

P.T.O.

Q6) With a neat and labeled diagram, explain in detail the production of polyester. **[18]**

Q7) Explain in detail the various pollution control - norms and methods of elimination applied in Petrochemical Industry. **[17]**

OR

Q8) Write in detail about the Integration of refinery and petrochemical plants with power generation. Also explain the process with neat and labelled diagram.**[17]**

Total No. of Questions : 8]

SEAT No. :

P-6523

[Total No. of Pages : 3

[6181]-72

B.E. (Civil Engineering)

FOUNDATION ENGINEERING

(2019 Pattern) (Semester - VII) (401001)

Time : 2½ Hours] ***[Max. Marks : 70***

Instructions to the candidates:

1) ***Answer Q.1 or Q.2, Q.3 or Q.4, Q.5 or Q.6, Q.7 or Q.8.***
2) ***Neat diagrams must be drawn whenever necessary.***
3) ***Figures to the right indicate full marks.***
4) ***Assume suitable data, if necessary and mention it clearly.***
5) ***Use of non-programmable calculator is allowed.***

Q1) a) Define Normal consolidation, over consolidation and Pre-consolidation Pressure. **[6]**

b) A normally consolidated clay stratum of 5m thickness has two permeable layers at its top and bottom. The liquid limit and the initial void ratio of clay are 40% and 0.85 respectively. While the initial overburden pressure at the middle of clay layers is 300kPa. Due to the construction of a new building, this pressure increases by 150 kPa. Compute the probable primary consolidation settlement (expressed in mm) of the building. **[6]**

c) What are the different types of foundation settlements? Explain in detail. **[5]**

OR

Q2) a) Discuss with sketch logarithmic of time fitting method for determination of coefficient of consolidation. **[6]**

b) An undisturbed sample of clay 24mm thick consolidated 50% in 20 minutes when tested in the laboratory, with drainage allowed at the top and bottom. The clay layer from which the sample was obtained is 4m tick in the field. How much time will it take place to consolidate 50% with a single drain? **[6]**

c) What is contact pressure? Draw contact pressure distribution of a rigid footing on sandy and clayey soil strata. **[5]**

P.T.O.

Q3) a) Enlist the classification of piles and explain with neat sketch pile classified with respect to function. **[6]**

b) A circular pile section with 0.35 m diameter and length of 10m penetrates into the clay having c = 50 KN/m^2 and mobilization factor = 0.8. Calculate the safe load with a factor of safety = 2.5. Neglect the bearing resistance. **[6]**

c) Define Negative Skin Friction. How it is determined. Also explain how it is prevented. **[5]**

OR

Q4) a) What are the conditions where a pile foundation is more suitable than a shallow foundation? **[6]**

b) Design square pile group to carry 500 kN load in clay with an unconfined compressive strength of 80 kN/m^2. The pile is 30cm diameter and 8m long and adhesion factor 0.6. Use FS = 3. **[6]**

c) Explain in brief efficiency of pile group. **[5]**

Q5) a) Sketch and describe the various components of the well foundation, indicating functions of each component. **[6]**

b) Discuss the procedure for proportioning of footing for equal settlement. **[6]**

c) What is Caisson? How Caissons are classified based on methods of construction? **[6]**

OR

Q6) a) Discuss tilts and shifts : precautionary and remedial measures of well Foundation. **[6]**

b) Explain design steps of raft foundation by elastic (flexible) method. **[6]**

c) What is meant by shallow foundations? What .are the principles of the design of footing? **[6]**

Q7) a) Discuss preloading with prefabricated vertical drains/sand drains with a neat sketch. **[6]**

b) Explain the effect of swelling and shrinkage of expansive soils on building constructed. Also, enlist the precautions to be taken. Illustrate with sketches. **[6]**

c) Enlist types of cofferdams. Explain any one type with neat sketch. **[6]**

OR

Q8) a) Discuss design principle of undreamed pile. **[6]**

b) Explain any four engineering problem associated with black cotton soil. **[6]**

c) List out the various techniques of soil improvement. Explain any one. **[6]**

Total No. of Questions : 8]

SEAT No. :

P-6524

[Total No. of Pages : 3

[6181]-73

B.E. (Civil Engineering)

TRANSPORTATION ENGINEERING

(2019 Pattern) (Semester - VII) (401002)

Time : 2½ Hours] *[Max. Marks : 70*

Instructions to the candidates:

1) ***Answer Q1 or Q2, Q3 or Q4, Q5 or Q6, Q7 or Q8.***
2) ***Figures to the right side indicate full marks.***
3) ***Use of electonic pocket calculator is allowed.***
4) ***Assume Suitable data, if necessary.***
5) ***Neat diagrams must be drawn wherever necessary.***

Q1) a) What do you mean by formation width and carriageway width. Draw the typical cross section of road in hilly area. **[6]**

b) Explain in brief how the superelevation is provided in the field. **[6]**

c) A vertical summit curve is formed at the intersection of two gradients + 3% and – 5%. Design the length of the summit curve to provide a stopping sight distance for a design speed of 80 kmph. Assume any other data suitably. **[6]**

OR

Q2) a) Explain any two important pavement surface characteristics with respect to highway geometric design. **[6]**

b) Design the rate of superelevation for a horizontal highway curve of radius 500m and speed 100 kmph. **[6]**

c) What are the various vehicular characteristics which affects the road design? Briefly explain. **[6]**

Q3) a) What are the desirable properties of the sub grade soil? **[6]**

b) Explain cutbacks and its types. What are its advantages over conventional bitumen? **[6]**

c) Explain how Impact Test on aggregates is done in the laboratory. How are the results of the test interpreted? **[6]**

P.T.O.

OR

Q4) a) What is Foamed Bitumen? How foamed bitumen is prepared and where it is used. **[6]**

b) Define 'flaky' aggregates. Explain the procedure for finding flakiness index in the laboratory. **[6]**

c) Write a note on Crumbed Rubber Modified Bitumen. **[6]**

Q5) a) Draw a neat cross section of flexible pavement. Explain in brief functions of various layers of flexible pavement. **[5]**

b) Explain maximum wheel load and contact pressure. **[6]**

c) Compute the radius of relative stiffness of 15cm thick cement concrete slab from the following data : **[6]**

Modulus of elasticity of cement concrete = 210000 kg/cm^2

Poisson's ratio for concrete = 0.13

Modulus of subgrade reaction,

K = i) 3.0 kg/cm^3 ii) 7.5 kg/cm^3

OR

Q6) a) Explain with sketch equivalent single wheel load ESWL. **[5]**

b) Calculate the stresses at interior regions of cement concrete pavement using Westergaard's stress equations. Use the following data : **[6]**

Modulus of elasticity of cement concrete = 300000 kg/cm^2

Wheel load = 5100 kg

Pavement thickness = 18 cm

Poisson's ratio for concrete = 0.15

Modulus of subgrade reaction = 6.0 kg/cm^3

Radius of contact area = 15 cm

c) Explain the importance of dowel and tie bars in rigid pavements. **[6]**

Q7) a) Explain afflux. List and explain the different formulae used for estimation of afflux. **[6]**

b) A bridge is proposed to be constructed across an alluvial stream carrying a discharge of 200 m^3/sec. Assume Lacey's slit factor equal to 1.0. Find the maximum depth of scour when the bridge consists of 2 spans of 40 m each. **[6]**

c) Explain the function of ballast. **[5]**

OR

Q8) a) Explain the following with a neat sketch : **[6]**

i) Box Culvert.

ii) Swing bridge.

iii) Suspension bridge.

b) A bridge has a linear waterway of 110m constructed across a stream, whose natural waterway is 190m. If the flood flow is 950 Cumecs and the mean depth of flow is 2.75m, Calculate the Afflux under the bridge. **[6]**

c) Define Rail Guage and explain its types. **[5]**

⌘⌘⌘

Total No. of Questions : 8]

SEAT No. :

P-6525

[Total No. of Pages : 2

[6181]-74

B.E. (Civil)

COASTAL ENGINEERING

(2019 Pattern) (Semester - VII) (401003A) (Elective - III)

Time : 2½ Hours] ***[Max. Marks : 70***

Instructions to the candidates:

1) ***Attempt Q.No.1 or Q.No.2, Q.No.3 or Q.No.4, Q.No.5 or Q.No. 6, Q.No. 7or Q.No.8.***
2) ***Figures to the right indicate full marks.***
3) ***Assume suitable data, if necessary.***
4) ***Neat diagrams must be drawn wherever necessary.***

Q1) a) How the tides in rivers and estuaries are different than oceanic tides? What are the storm surges? What are the effects of tides on day-to-day lifelong activities along the nearshore region? **[9]**

b) Define tidal currents in shallow sea? Explain the spring and neap tide with sketch. What are the forces which affects the tidal currents in shallow sea? **[9]**

OR

Q2) a) Elaborate in detail dynamic theory of tides. **[9]**

b) Classify the tides in detail based on the position of Earth, Sun, and the Moon and based on the frequency of occurrence. Draw the neat diagrams wherever necessary. **[9]**

Q3) a) Elaborate the effect erosion on construction of coastal structures and their stability on shoreline and beaches. **[8]**

b) Define erosion and accretion due to waves. Write a note on following coastal erosion features **[9]**

i) Notch

ii) Sea Arch

iii) Cliff

P.T.O.

OR

Q4) a) Define the 'Bed forms'. Explain in details about types of 'Bed forms'. **[8]**

b) Enlist the different environmental factor influencing sediment transfer and explain any three in details. **[9]**

Q5) a) Explain the types of near shore structures with example. **[9]**

b) Write a note on 'beach nourishment' and explain the necessity of 'beach nourishment' **[9]**

OR

Q6) a) Draw the representative diagrams of sea walls, revetments, bulkheads and explain each of them in depth along with their functions. **[9]**

b) What is the concept breakwater? How it useful for shore protection? Explain following types of breakwaters in details : **[9]**

i) Submerged breakwaters

ii) Floating breakwaters

iii) Attached breakwater

Q7) a) What is a CRZ? Elaborate the issues related to integrate coastal zone management. **[8]**

b) Write short note about the estuaries, wetland and lagoons, coastal dunes. **[9]**

OR

Q8) a) Enlist the any four activity permitted in CRZ-II and CRZ-IV. **[8]**

b) What are the causes of pollution in coastal zone? Discuss the various issues for disposal of waste/dredged spoils in the coastal zones. **[9]**

Total No. of Questions : 8]

SEAT No. :

P-6526

[Total No. of Pages : 3

[6181]-75

B.E. (Civil) (Theory)

ADVANCED DESIGN OF CONCRETE STRUCTURES

(2019 Pattern) (Semester - VII) (401003B) (Elective - III)

Time : 3 Hours] ***[Max. Marks : 70***

Instructions to the candidates:

1) ***Answer Q.1 or Q.2, Q.3 or Q.4, Q.5 or Q.6, Q.7 or Q.8.***
2) ***Neat sketches must draw wherever necessary.***
3) ***Figures to right indicate full marks.***
4) ***Assume suitable data if necessary.***
5) ***IS 456, IS 3370, IS 1893 and IS 13920 is allowed in the examination hall.***
6) ***Use of non programmable electronic calculator is allowed.***

Q1) Design a RCC "T" type cantilever retaining wall for the given data. **[17]**
Draw details of reinforcement. Quote IS Code references.
$\varphi = 31°$, SBC = 160 kN/m^2, M20, Fe 500
μ between concrete base and the strata = 0.54
Ht. of leveled backfill above the top of base in 5.4 m,
Unit Wt. of Backfill γ = 17.5kN/m^2 Surcharge is 10 kN/m^2.

OR

Q2) a) Design a RCC "L" type cantilever retaining wall for the given data. **[12]**
Draw details of reinforcement. Quote IS Code references
$\varphi = 30°$, SBC = 165kN/m^2,
μ between concrete base and the strata= 0.56
Ht. of leveled backfill above the top of base in 4.8 m,
Unit Wt. of Backfill γ =18.5kN/m^3, Assume M20, Fe 415.

b) Explain with neat sketches, the deformation of T shaped retaining wall and show the position of the main reinforcement to be provided in all elements. **[5]**

P.T.O.

Q3) a) Design of circular water tank using by approximate method code method for 1 lakh litres capacity. The joint between the wall and base of tank is rigid. The tank rests on ground. Draw details of reinforcement. M25, Fe 500, SBC = 160 kN/m^2. **[14]**

b) Explain the approximate analysis and design of circular water tank with rigid base, with proper sketches. **[4]**

OR

Q4) Design rectangular RCC water tank by IS code method for 165000 litre with wall fixed in base slab, resting on ground for the given data. Draw details of reinforcement. Quote IS Code references M25, Fe 500, SBC =150kN/m^2, take aspect ratio 1.5. **[18]**

Q5) a) Discuss different types of shear wall and explain the lateral load resistance mechanism for the shear wall. **[5]**

b) Design RCC flanged / rectangular type shear wall of overall dimension (230 × 3600) assuming suitable size of bells data. M20 Fe 500, Draw details of reinforcement. Quote IS Code references. Axial force = 7200 kN, In plane Moment = 3800 kN/m, Horz Shear = 760kN. **[12]**

OR

Q6) Design a ductile solid shear wall with boundary elements, for a residential building, located in seismic zones IV. Use M30 grade concrete and Fe 415 grade of steel. Consider the height of shear wall as 18 m & length of shear wall as 5 m. The RC shear wall is subjected to the following loadings. Shear Force = 450 kN, axial force =7800 kN, axial force on boundary element = 1300 kN and moment = 5,300 kNm. **[17]**

Q7) Determine the seismic forces at each floor level for the commercial RCC structure. The building is a Four storey structure having total height 12 m with three frames placed c/c distance of 8 m forming two bay of size 6 m each. Storey height of 3 m is provided. The building is located in seismic zone II. The soil investigation revealed well graded gravel. The special moment resisting RC frames are in-filled with brick-masonry. The lumped weight due to dead loads may be taken as 14 kN/m^2. The floors are to cater a live load of 4 kN/m^2 on floors and 2.5 kN/m^2 on the roof. **[18]**

OR

Q8) a) Explain the approximate methods of analysis for lateral and vertical loading for multi-storey frame. **[4]**

b) A continuous three span beam ABCD have equal span of 6 m. The design data for the beam is as follows. The moments due to vertical loads are Support moments MA (–) = 47.52 kNm; MB (–) = 78.61 kNm, Mid span moments: MAB (+) = 54.60 kNm and MBC (+) = 51.80 kNm. Earthquake moments are 180 kNm. Design the beam ABCD for combined effect of lateral and gravity loads for flexure only. Draw the ductile detailing of the reinforcement. **[14]**

⌘⌘⌘

Total No. of Questions : 8]

SEAT No. :

P-6527

[Total No. of Pages : 2

[6181]-76

B.E. (Civil)

INTEGRATED WATER RESOURCES PLANNING AND MANAGEMENT

(2019 Pattern) (Semester - VII) (Elective - III) (401003C)

Time : 2½ Hours] ***[Max. Marks : 70***

Instructions to the candidates:

1) ***Answer Q1 or Q2, Q3 or Q4, Q5 or Q6, Q7 or Q8.***
2) ***Neat diagrams must be drawn wherever necessary.***
3) ***Figures to the right side indicate full marks.***
4) ***Assume suitable data, if necessary.***

Q1) a) Assessment of river water quality plays important, Justify and write a brief note on prevention and control of surface water pollution. **[10]**

b) Explain water quality monitoring for basins. **[8]**

OR

Q2) a) What is Environmental Impact Assessment (EIA) and what are its objectives, state methodology to carryout EIA. **[10]**

b) State any four important CPCB regulations regarding water pollution control. **[8]**

Q3) a) State and explain principles of planning and financing water of water resources projects. **[10]**

b) Explain how water is economic good. **[7]**

OR

Q4) a) Explain framework for planning a sustainable water future. **[10]**

b) Explain in brief economics and decision making in IWRPM. **[7]**

Q5) a) What are water crises, explain its global and national perspective. **[10]**

b) State and explain rural local governing body water laws. **[8]**

P.T.O.

OR

Q6) a) State and explain UN laws on non-navigable uses of international water courses. **[10]**

b) State any four municipal corporation laws regarding water supply and drainage. **[8]**

Q7) a) Explain in detail role of dam in flood control and power generation and its importance in IWRPM. **[10]**

b) Explain importance of management of flood plains. **[7]**

OR

Q8) a) What is flood forecasting what are the methods to forecast flood. **[10]**

b) Explain application of soft computing in flood control. **[7]**

□□□

Total No. of Questions : 8]

SEAT No. :

P-6528

[Total No. of Pages : 3

[6181]-77
B.E. (Civil Engineering)
FINITE ELEMENT METHOD
(2019 Pattern) (Semester - VII) (401003D) (Elective - III)

Time : 2½ Hours] *[Max. Marks : 70*

Instructions to the candidates :

1) ***Attempt Q.1 or Q.2, Q.3 or Q.4, Q.5 or Q.6, Q.7 or Q.8.***
2) ***Neat diagram must be drawn wherever necessary.***
3) ***Figures to the right indicate full marks.***
4) ***Assume suitable data, if necessary and clearly state.***

Q1) a) What is the difference between CST and LST elements? **[9]**

b) Derive shape functions for two nodded bar element using polynomial function in Cartesian coordinate system. **[8]**

OR

Q2) a) Derive area coordinates for three nodded CST element. **[9]**

b) Derive shape function for two nodded beam element using polynomial function in Cartesian coordinate system. **[8]**

Q3) a) Explain the terms isoparametric, superparametric and subparametric elements. **[8]**

b) For the isoparametric quadrilateral elements shown in Fig. 1 and Fig. 2, determine the Cartesian coordinates of the point P, which has natural coordinates $\xi = 0.57735$ and $\eta = 0.57735$. **[9]**

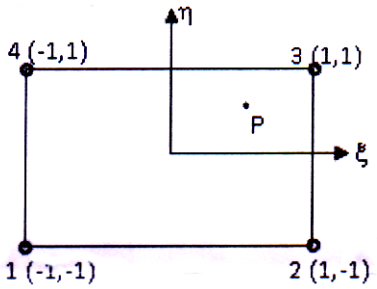

Fig. 1: Natural Coordinates

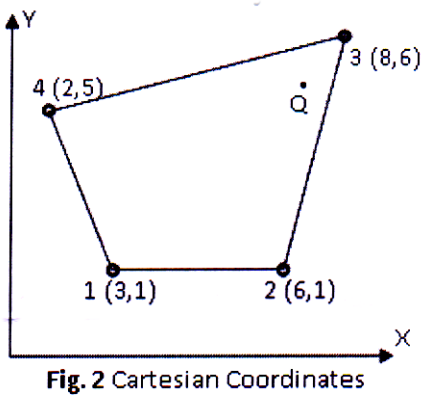

Fig. 2 Cartesian Coordinates

OR

P.T.O.

Q4) a) Write a short notes on Jacobian Matrix. **[8]**

b) For the isoparametric quadrilateral elements shown in Fig. 1 and 2, determine the Natural coordinates of the point Q which has Cartesian Coordinates (7,4). **[9]**

Q5) Analyze the beam shown in Fig. 3 by member approach stiffness matrix method and determine the end reactions. **[18]**

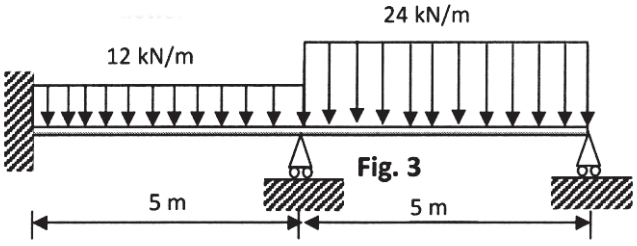

Fig. 3

OR

Q6) Obtain the forces in the plane truss shown in Fig.4 use member approach stiffness matrix method. Take E = 200 GPa and A = 2000 mm^2. **[18]**

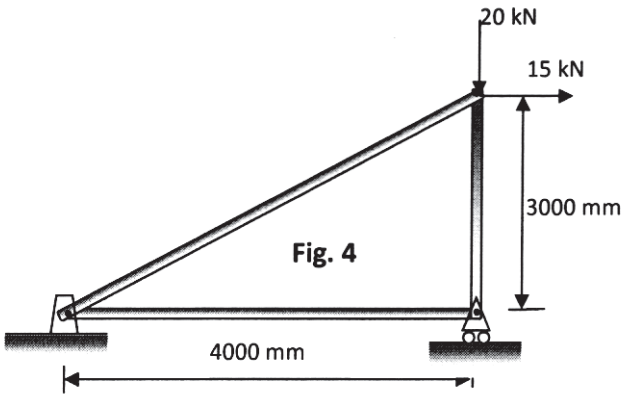

Fig. 4

Q7) Analyze the plane frame shown in figure 5 by stiffness matrix method and plot BMD. **[18]**

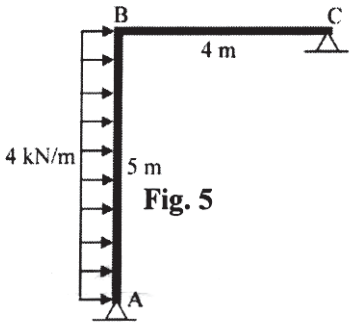

Fig. 5

OR

Q8) a) Derive the member stiffness matrix for grid element. **[9]**

b) Derive the transformation matrix for plane frame element. **[9]**

▽▽▽▽

Total No. of Questions : 8]

SEAT No. : ____

P-6529

[Total No. of Pages : 2

[6181]-78
B.E. (Civil)
DATA ANALYTICS
(2019 Pattern) (Semester-VII) (Elective - III) (401003 E)

Time : 2½ Hours] ***[Max. Marks : 70***

Instructions to the candidates :

1) ***Solve Q1 or Q2, Q3 or Q4, Q5 or Q6, Q7 or Q8.***
2) ***Figures to the right side indicate full marks.***
3) ***Neat diagrams must be drawn wherever necessary.***
4) ***Assume suitable data if necessary.***

Q1) a) What is sampling? What are sampling methods? **[5]**

b) State the central limit theorem. **[5]**

c) Calculate rank correlation coefficient from the following data: **[8]**

Expenditure on Advertisement	10	15	14	25	14	14	20	22
Profit	6	25	12	18	25	40	10	7

OR

Q2) a) Write merits and demerits of Rank Correlation Coefficient. **[5]**

b) Explain concept of sample with an example. **[5]**

c) The ranking of 10 individuals at the start and finish of a training course are as follows: Calculate the Spearman's Rank correlation coefficient and interpret the value **[8]**

Individual	A	B	C	D	E	F	G	H	I	J
Rank(Before)	1	6	3	9	5	2	7	10	8	4
Rank(After)	5	7	3	4	8	12	6	8	4	2

Q3) a) State and explain types of Hypotheses? **[5]**

b) Describe the different steps for testing the significance of population proportion. **[5]**

c) A sample of 250 measurements of breaking strength of cotton threads provided a mean of 235 gm and a S.D of 32 gm. Find 95% confidence limits to the mean breaking strength. **[7]**

OR

P.T.O.

Q4) a) Give difference between Z- test and T- test. **[5]**

b) What are the basic concepts of concerning testing of hypothesis? **[5]**

c) The sales data of an item in six shops before and after a special promotional campaign are: **[7]**

Shops	A	B	C	D	E	F
Before the campaign	55	30	33	50	52	44
After the campaign	60	31	32	57	58	47

Can the campaign be judged to be a success? Test at 5 per cent level of significance. Use paired t-test. As per tablet < -2.015.

Q5) a) Explain various phases of data analytics life cycle with example. **[5]**

b) What is Multivariate Multiple Regression? Explain Multicollinearity. **[5]**

c) If x and y are connected by the relation $ax^2+b^y=x$, find the values of a and b by using least square criteria. **[8]**

x	1	2	3	4	5
y	3.35	5.92	8.43	10.93	13.45

OR

Q6) a) How can the least squares regression line be used to make predictions? **[5]**

b) Explain with suitable examples: **[5]**

i) Data Comparing.

ii) Data Reporting.

c) The mean of a certain production process is known to be 90 with a standard deviation of 1.5. The production manager may welcome any change in mean value towards higher side but would like to safeguard against decreasing values of mean. He takes a sample of 12 items that gives a mean value of 47.5. What inference should the manager take for the production process on the basis of sample results? Use 5 per cent level of significance for the purpose. (Table value: R : z < — 1.645) **[8]**

Q7) a) Define Machine learning? Briefly explain the types of learning. **[6]**

b) What is the basic principle of a Support Vector Machine? **[5]**

c) Write short note on Reinforcement learning. **[6]**

OR

Q8) a) Write Short notes on Machine learning Applications. **[6]**

b) What type of problems are best suited for decision free learning. **[5]**

c) Explain k-means clustering. **[6]**



Total No. of Questions : 8]

SEAT No. :

P-6530

[Total No. of Pages : 4

[6181]-79

B.E. (Civil)

OPERATIONS RESEARCH

(2019 Pattern) (Semester - VII) (Elective - III) (401003F)

Time : 2½ Hours] ***[Max. Marks : 70***

Instructions to the candidates:

1) ***Solve Q1 or Q2, Q3 or Q4, Q5 or Q6, Q7 or Q8.***
2) ***Figures to the right side indicate full marks.***
3) ***Use of Calculator is allowed.***
4) ***Assume Suitable data if necessary.***

Q1) a) Solve following example using simplex Method **[8]**

Maximize $Z = 15x_1 + 25x_2$

Subject to

$5x_1 + 15x_2 \leq 80$

$16x_1 + 5x_2 \leq 80$

$x_1, x_2 \geq 0$

b) State the advantages of dual-primal equations. **[4]**

c) The Wyndor Glass Co. produces high quality glass products, including windows and glass doors. It has three plants in which two products are manufactured: Product 1- 8” glass door with aluminum frame; Product 2- a 4 x 6 feet double hung wood framed window. Product 1 requires some of the production capacity in plants 1 and 2, whereas product 2 needs only plants 2 and 3. The production time required for product 1 is 1 hr/batch and 3 hrs/batch for plants 1 and 3 respectively. The production time required for product 2 is 2 hrs/batch each for plants 2 and 3 respectively. The total production times available for plant 1 is 4 hours per week, plant 2 is 12 hrs/week and plant 3 is 18 hrs/ week. The profits earned by product 1 are Rs 3000 per batch and for product 2 is Rs. 5,000 per batch. Formulate the production schedule to maximize the profit. **[6]**

P.T.O.

OR

Q2) a) Solve the following problem using Big M method **[12]**

Maximize $Z = x_1 + 2x_2 + 3x_3$

Subject to

$x_1 - x_2 + x_3 \geq 4$

$x_1 + x_2 + 2x_3 \leq 8$

$x_1 - x_3 \geq 2$

$x_1, x_2, x_3 \geq 0$

b) What the sensitivity analysis is as applied in Linear programming problem? Explain with the help of example. **[6]**

Q3) a) Explain steps involved in solving transportation problem using least cost method. **[6]**

b) What are the applications of assignment problem in construction industry? **[4]**

c) Optimize following transportation problem using VAM. **[8]**

	D1	D2	D3	D4	supply
S1	9	6	5	8	30
S2	3	7	3	9	25
S3	5	4	6	7	15
Demand	10	25	18	17	

OR

Q4) a) A company has five machines on which five jobs are performed. Each job can be assigned to only one machine. The cost of each job on each machine is given in the following table. Optimize the assignment to get minimum cost. **[8]**

		Machines				
		A	B	C	D	E
jobs	1	75	78	66	90	95
	2	92	65	93	67	81
	3	68	80	82	83	76
	4	92	84	87	79	78
	5	85	91	70	69	94

b) Find initial solution of the following transportation problem using **[6]**

i) Least cost method

ii) Column minima method

	A	B	C	Supply
1	20	70	40	50
2	30	30	10	80
3	50	40	70	70
4	10	60	20	140
Demand	70	90	180	

c) What is meant by unbalanced assigrnent problem? State the steps to solve such problems. **[4]**

Q5) a) What are the applications of non linear programming in Civil Engineering? **[6]**

b) Carry out the calculation for finding the maxima of following equation using Fibonacci method with 1% accuracy in the interval (2, 5) upto two iterations only. **[8]**

Maximize $f(x) = 2x^4 - 5x^3 + 4x^2$

c) What are similarities between Golden section method and Fibonacci method? **[3]**

OR

Q6) a) Maximize $Z = 2x_1 + 3x_2 - x_1^2 - 2x_2^2$ using Lagrangian Multiplier method

Subject to **[8]**

$x_1 + 3x_2 = 6$

$5x_1 + 2x_2 = 10$

$x_1, x_2 \geq 0$

b) Write a detail note on gradient method including the following points **[5]**

i) Type of objective function

ii) Application of the method

c) Using Hessian matrix, determine whether following function is convex or concave. **[4]**

$f(x) = 4x_1x_2 + 2x_1x_3 - 4x_2x_3$

Q7) a) Consider following payoff matrix for two opponents. **[9]**

		Opponent 2			
		P	Q	R	S
Opponent 1	A	3	5	2	8
	B	2	6	5	2
	C	4	7	3	9

i) Check whether there exists saddle point.

ii) Give optimum strategy for both the firms

iii) Find the value of Game

b) Rs 12,000 are to be invested in three schemes, namely A, B, C to have the best returns. The returns are as under. **[8]**

	Returns in rupees for the investment of			
	Rs. 3,000	Rs. 6,000	Rs. 9,000	Rs. 12,000
A	60	175	310	400
B	85	140	320	485
C	50	200	350	430

Using Dynamic Programming, find the best investment programme for maximum returns.

OR

Q8) a) A wheel loader is purchased for Rs. 50 lacs with expected life as 10 years. The running cost and resale price in lacs of Rs is given in the following table. **[9]**

Year	1	2	3	4	5	6	7	8	9	10
Running cost	9.5	10.9	12.8	14	16	18.3	21	24	28	33
Resale price	42.6	38.2	35	32.8	30	28	27.5	27	26	24

Find the replacement year for the wheel loader.

b) Write the applications of following OR techniques in the field of Civil Engineering. **[8]**

i) Games theory

ii) Dynamic Programming

Total No. of Questions : 8]

SEAT No. :

P-6531

[Total No. of Pages : 3

[6181]-80

B.E. (Civil)

AIR POLLUTION AND CONTROL

(2019 Pattern) (Semester - VII) (401004A) (Elective - IV)

Time : 2½ Hours] ***[Max. Marks : 70***

Instructions to the candidates:

1) ***Answer Q.1 or Q.2, Q.3 or Q.4, Q.5 or Q.6, Q.7 or Q.8.***
2) ***Figures to the right indicates full marks.***
3) ***Draw neat figures wherever necessary.***
4) ***Assume suitable data, if necessary.***
5) ***Use of scientific calculators is allowed.***

Q1) a) Enlist various methods of sampling particulate matter and explain any one in detail. **[6]**

b) Explain Stack monitoring in details with a neat sketch. **[5]**

c) Convert 80 $\mu g/m^3$ of SO_2 in ppm. Assume temperature 25°C and pressure at 103.193 kPa. **[6]**

OR

Q2) a) Write in a tabular form National ambient air quality standard (NAAQS) specified by central pollution control board (CPCB) for PM_{10} and $PM_{2.5}$ (Annual and 24 hours for industrial, Residential, Rural and other area). **[6]**

b) Explain the purpose of ambient air sampling. **[5]**

c) Write a short note on High volume sampler with sketch. **[6]**

Q3) a) State the Basic equation of Emission estimation. **[6]**

b) Explain types of air quality models. **[5]**

c) Define emission inventory and enlist the types. **[6]**

OR

P.T.O.

Q4) a) Write a short note on air quality modelling. **[6]**

b) Explain Emission inventory framework developed by CPCB. **[5]**

c) Deliberate the strengths and limitations of AERMOD model USEPA.p **[6]**

Q5) a) Calculate the minimum size of the particle that will be removed with 100% efficiency from a settling chamber for the following data :

i) Horizontal velocity - 0.25 m/s

ii) Particle Density - 2500 kg/m^3

iii) Chamber : Length - 7.5 m, height - 1.5 m

iv) Viscosity of air -1.9×10^{-5} kg/ms.

v) Gas Density - 1.0888 kg/m^3

The settling chamber will be operated under quiescent conditions. **[8]**

b) Write a note on electrostatic precipitator on Mechanism, working principle & applications. **[5]**

c) Explain the measures for controlling the emission from mobile sources. **[5]**

OR

Q6) a) State the working principle, advantages and disadvantages of fabric filter as a particulate control equipment. **[5]**

b) Design a parallel type ESP with 10 channels to handle 12000 m^3/hour of gas for efficiency of 95%. **[8]**

Assume :

i) Velocity of particle = 0.1 m/s

ii) Height of plate = 2.0 m

iii) Spacing between plate = 0.15 m

c) What is carbon sequestration? Enlist the types, explain any one. **[5]**

Q7) a) Enlist methods for odour pollution control. Explain any one in detail. **[6]**

b) Explain sick building syndrome with causes and its preventive measures. **[6]**

c) What is active and passive sampler? Explain with advantages and disadvantages. **[6]**

OR

Q8) a) What are the causes and effects of indoor air pollution? **[6]**

b) What are the sources of air pollutants? **[6]**

c) Explain use of plants for indoor air quality improvement. **[6]**

⌘⌘⌘

Total No. of Questions : 8]

SEAT No. :

P-6532

[Total No. of Pages : 3

[6181]-81

B.E. (Civil Engineering)

ADVANCE DESIGN OF STEEL STRUCTURES

(2019 Pattern) (Semester - VII) (401004B) (Elective - IV)

Time : 3 Hours] ***[Max. Marks : 70***

Instructions to the candidates:

1) ***Answer Q.1 or Q.2, Q.3 or Q.4, Q.5 or Q.6 and Q.7 or Q.8.***
2) ***Neat sketches must be drawn wherever necessary.***
3) ***Figures to the right indicate full marks.***
4) ***Take f_y = 250 and f_e = 410 grade of steel wherever suitable.***
5) ***Take ultimate stress in bolt, f_{ub} = 400 N/mm^2.***
6) ***Assume suitable data, if necessary.***
7) ***Use of electronic pocket calculator, relevant is codes and Steel table are allowed.***
8) ***Use of cell phone is prohibited in the examination hall.***

Q1) a) Discuss the concept of buckling in light gauge sections and how it affects their design and stability. **[5]**

b) Find permissible load on column for rectangular light gauge section 200 × 120 × 2 mm. The effective length of column is 3.6m, Assume f_y = 235 N/mm^2. **[12]**

OR

Q2) a) What are the key design considerations when using light gauge sections for load-bearing applications and how do they differ from heavier structural steel sections? **[5]**

b) Two channels 200 × 80 mm with bent lips are connected with web to act as a beam. The thickness of plate is 2.5 mm and the depth of lip is 25 mm. The beam has effective span of 4m. Determine safe load per meter on the beam. Assume the beam as laterally supported. Use f_y = 235 N/mm^2. **[12]**

P.T.O.

Q3) a) How does the selection of circular hollow sections in tubular trusses influence the design procedure? **[5]**

b) Design a hollow circular steel section to carry axial tensile load of 150 kN. Its length is 2.1 m. It is at right angle with other member. Also design welded connection. **[13]**

OR

Q4) a) What are the relevant codes that apply to design of tubular structures and explain their role in design? **[5]**

b) Design a hollow circular steel section to carry axial compressive load of 170 kN. Its length is 2.3 m. It is at right angle with other member. Also design welded connection. **[13]**

Q5) a) What is a castellated beam and how is it fabricated from a rolled steel section? **[5]**

b) Design castellated beam for a simply supported beam carries live load of 5 kN/m and dead load of 4 kN/m over a span of 10 m. Assume compression flange of beam is laterally supported throughout the span. **[12]**

OR

Q6) a) What are the modes of failure that castellated beams are susceptible to and how do they differ from traditional beams? **[5]**

b) A simply supported beam carries total load including dead load and live load of 15 kN/m over the span of 12 m. Design castellated beam assuming compression flange is fully restrained. **[12]**

Q7) Find the collapse load W for the portal frame as shown in figure 1. **[18]**

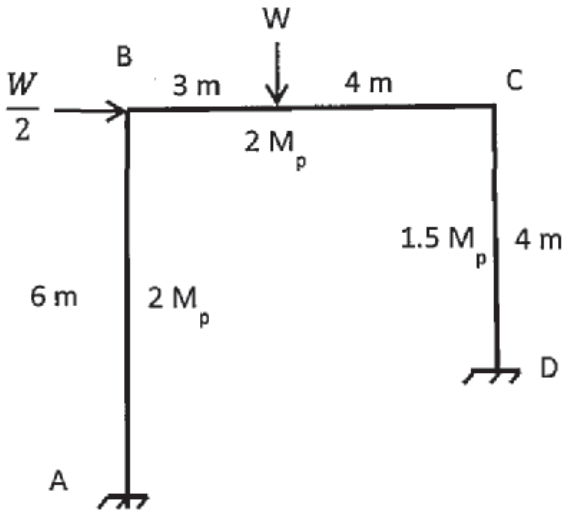

Figure 1

OR

Q8) Analyses the gable frame loaded and supported as shown in figure 2 and find plastic moment capacity M_P. Assume uniform cross section for all members of the frame. **[18]**

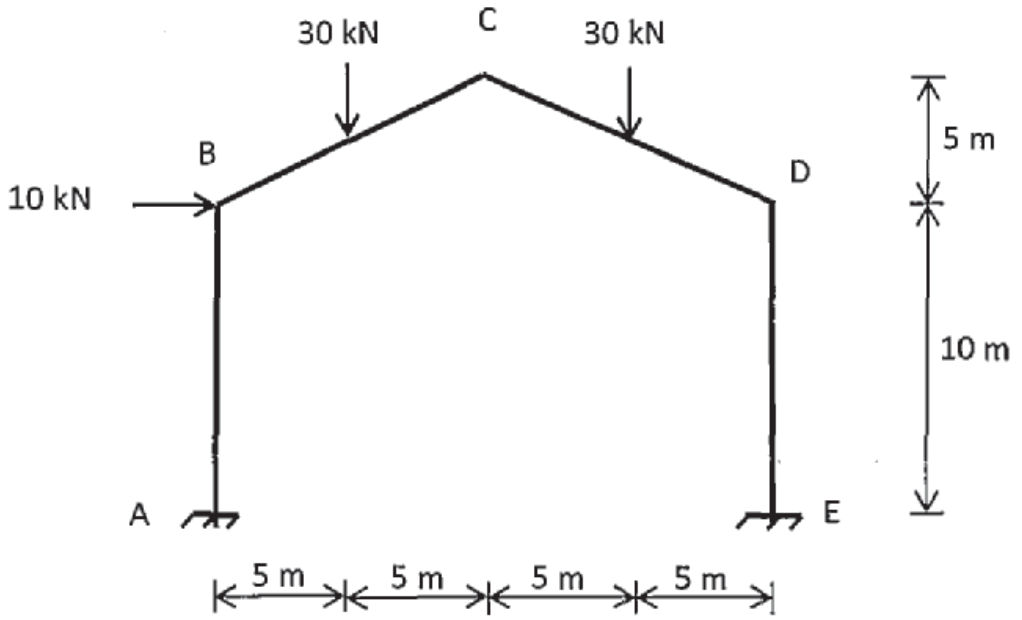

Figure 2

Total No. of Questions : 8]

SEAT No. : ____

P-6533

[Total No. of Pages : 3

[6181]-82
B.E. (Civil)
STATISTICAL ANALYSIS AND COMPUTATIONAL METHODS
(2019 Pattern) (Semester - VII) (401004C) (Elective - IV)

Time : 2½ Hours] ***[Max. Marks : 70***

Instructions to the candidates :

1) ***Answer Q.1 or Q.2, Q.3 or Q.4, Q.5 or Q.6, Q.7 or Q.8.***
2) ***Figures to the right indicate full marks.***
3) ***Assume suitable data, if necessary.***
4) ***Use of electronic pocket calculator is allowed in the examination.***
5) ***Use of cell phone is prohibited in the examination hall.***

Q1) a) Write a short note on Data sampling, its types, methods of sampling and ideal sample size selection with relevant examples. **[5]**

b) Explain with an example Chi Square test. **[6]**

c) Write a short note on Process of sampling and explain what is the meaning of "Null Hypothesis". **[6]**

OR

Q2) a) Write a short note on Sampling Distribution of the Mean and the Central Limit. **[5]**

b) Explain with an example Z test. **[6]**

c) Write a short note on different types of samples with suitable examples on each. **[6]**

Q3) a) Explain in detail assumptions of Z test of Hypothesis. **[6]**

b) In order to start new S.T. bus to a certain remote village it is required to get the average fare of 1400 daily. Reports on number of passengers for 21 days revealed that the average daily collection of fare from the passengers was1390 with standard deviation of 140. Do these data support the demand of people for starting new bus to the village? [Use 5% l.o.s.] Use Student T Test. **[6]**

P.T.O.

c) The demand for a particular spare part in a factory was found to vary from day-to-day. In a sample study the following information was obtained. **[6]**

Days	Mon.	Tues.	Wed.	Thurs.	Fri.	Sat.
No. of Parts Demanded	1124	1125	1110	1120	1126	1115

Test the hypothesis that the number of parts demanded does not depend on the day of the week. Apply Chi Square Test.

OR

Q4) a) Explain : **[6]**

i) Hypothesis and hypothesis testing

ii) Null Hypothesis

iii) One and two-sided hypothesis

b) The figures given below are (a) the theoretical frequencies of a distribution and (b) the frequencies of a normal distribution having the same mean, standard deviation and the total frequency as in (a). **[6]**

i) 1, 5, 20, 28, 42, 22, 15, 5, 2.

ii) 1, 6, 18, 25, 40, 25, 18, 6, 1.

Apply the $\chi 2$ test of goodness of fit.

c) Suppose that sweets are sold in packages of fixed weight of the contents. The producer of the packages is interested in testing that average weight of contents in packages in 1 kg. Hence a random sample of 12 packages is drawn and their contents found (in kg) as follows : 1.05, 1.01, 1.04, 0.98, 0.96, 1.01, 0.97, 0.99, 0.98, 0.95, 0.97, 0.95. **[6]**

Using the above data what should he conclude about the average weight of contents in the packets? Use Student T Test.

Q5) a) Explain Correlation Analysis and its application to Civil Engineering. **[6]**

b) Obtain regression lines for the following data : **[6]**

x	2	3	5	7	9	10	12	15
y	2	5	8	10	12	14	15	16

Find estimate of (i) Y when X = 6 and (ii) X when Y = 20.

c) If the two lines of regression are $9x + y - \lambda = 0$ and $4x + y = \mu$ and the means of x and y are 2 and –3 respectively, find the values of λ, μ and the coefficient of correlation between x and y. **[6]**

OR

Q6) a) Explain Regression analysis and its applications to Civil Engineering. **[6]**

b) Find the lines of regression for the following data : **[6]**

x	10	14	19	26	30	34	39
y	12	16	18	26	29	35	38

and estimate y for $x = 14.5$ and x for $y = 29.5$.

c) Determine regression line for price, given the supply, hence estimate price when supply is 180 units, from the following information:

x = supply, y = Price, $n = 7$, $\sum(x-150)=119$, $\sum(y-160)=84$,

$\sum(x-150)2=2835$, $\sum(y-160)2=2387$, $\sum(x-150)\sum(y-160)=525$.

Also, find correlation coefficient between price and supply. **[6]**

Q7) a) Explain one and two-sided analysis of variance. **[5]**

b) If X and Y are connected by the relation $ax2 + by2 = X$, find the value of a and b by rearranging the relation into linear form by using least square criteria for following data : **[6]**

x	1	2	3	4	5
y	3.35	5.92	8.43	10.93	13.45

c) If the relation between x and y is of the type $y = a\ bx$. Using following values of x and y, find the values of constants a and b for the best fitting curve. **[6]**

x	2.1	2.5	3.1	3.5	4.1
y	5.14	6.788	10.29	13.58	20.578

OR

Q8) a) Explain K-S test for goodness of fit. **[5]**

b) For the tabulated values of x and y given below fit a linear curve of the type $y = mx + c$. **[6]**

x	1.0	3.0	5.0	7.0	9.0
y	1.5	2.8	4.0	4.7	6.0

c) Fit a curve $y = ax^b$ using the following data : **[6]**

x	2000	3000	4000	5000	6000
y	15	15.5	16	17	18

▽▽▽▽

Total No. of Questions : 8]

SEAT No. :

P-6534

[Total No. of Pages : 2

[6181]-83
B.E. (Civil)
AIRPORT AND BRIDGE ENGINEERING
(2019 Pattern) (Semester - VII) (Elective-IV) (401004D)

Time : 2½ Hours] ***[Max. Marks : 70***

Instructions to the candidates :

1) ***Answer Q.1or Q.2, Q.3 or Q.4, Q.5 or Q.6, Q.7 or Q.8.***
2) ***Figures to the right indicate full marks***
3) ***Use of electronics pocket calculator is allowed.***
4) ***Assume suitable data jf necessary.***
5) ***Neat diagrams must be drawn wherever necessary.***

Q1) a) Explain need of Building information modelling for Airport. **[6]**

b) What is the aim of airport drainage and give functions of the airport drainage. **[6]**

c) What is Ultimate and Practical Runway Capacity? Give Factors affecting on Runway Capacity. **[6]**

OR

Q2) a) What are the benefits of Building Information Modelling for Airport? **[6]**

b) Write a Short note on Virtual Reality. **[6]**

c) Give classification of airport pavement and explain in detail. **[6]**

Q3) a) What are the different factors that affecting on the Airport Lighting? **[6]**

b) Write a Short note on: Airport Marking. **[5]**

c) Explain in brief Heliport and Stolport. **[6]**

OR

Q4) a) Write a short note on **[5]**

i) Marking of Heliports

ii) Lighting of Heliports

b) What are the different characteristics of STOL Aircraft? **[5]**

c) How to plan stolports? Give advantages of STOL Aircraft. **[6]**

P.T.O.

Q5) a) Give brief classification of different bridge structures. **[5]**

b) What are the different components of bridge? Explain in detail with the help of neat sketch. **[5]**

c) What is economic span of bridge? Give Derivation for economic span of bridge. **[7]**

OR

Q6) a) What are the different types of Culvert? Explain in detail with the help of neat sketch. **[5]**

b) What is causeway? Explain the different types of causeway with the help of neat sketch. **[5]**

c) Explain Preliminary and detailed survey work to be done before construction of bridge structure. **[7]**

Q7) a) Give explanation on Direct Method of Calculating the maximum flood discharge. **[10]**

b) From the following data, Calculate linear Waterway required for a bridge to be constructed across the River: **[8]**

Catchment Area = 800 Hectares

Maximum intensity of Rainfall = 1.21 cm per hour

Runoff Coefficient = 0.80

Permissible Velocity = 120 cm/ second

Average depth of flow = 180cm

OR

Q8) a) Explain in details Movable - Span Super Structures with the help of neat Sketches. **[9]**

b) Explain Cut Boat Bridge, Flying Bridge, Lift Bridge and Swing Bridge with the help of neat sketches. **[9]**



Total No. of Questions : 8]

SEAT No. :

P-6535

[Total No. of Pages : 3

[6181]-84

B.E. (Civil)

DESIGN OF PRESTRESSED CONCRETE STRUCTURES

(2019 Pattern) (Semester - VII) (401004E) (Elective -IV)

Time : 3 Hours] *[Max. Marks : 70*

Instructions to the candidates:

1) ***Answer Q.1 or Q.2, Q.3 or Q.4, Q.5 or Q.6, Q.7 or Q.8.***
2) ***Neat diagrams must be drawn wherever necessary.***
3) ***Figures to the right indicates full marks.***
4) ***Use of electronic pocket calculators is allowed.***
5) ***IS1343 : 2012 and IS456:2000 codes of practice are allowed.***
6) ***Assume suitable data, if necessary.***

Q1) a) A pre-tensioned prestressed concrete beam having a rectangular. section, 150 mm wide and 300 mm deep has an effective cover of 50 mm. If f_{ck} = 40 N/mm^2 f_{pu} = l600N/mm^2, and the area of prestressing steel Aps = 461 mm^2, Calculate the ultimate flexural strength of the section using IS 1343 code provisions. **[9]**

b) A prestressed concrete beam 250 mm wide & 375 mm deep is subjected to two symmetrical cables each with a prestressing force of 800 kN. An anchor plate 150 mm × 275 mm is provided for each cable. Calculate the reinforcement required to resist bursting forces in the transmission zone. Assume a jacking force equal to 960 kN for each cable. **[8]**

OR

Q2) a) A pre-tensioned T-section, has a flange which is 1200mm wide and 150 mm deep. The rib is 300 mm wide and 1500mm deep. The effective depth of the cross section is 1600mm. If f_{ck} = 40 N/mm^2, f_{pu} = l600N/mm^2 and the area of prestressing steel Aps = 4700 mm^2, Calculate the ultimate flexural strength of the section using IS1343 code provisions. **[8]**

b) A prestressed concrete beam of rectangular section 150 mm wide by 300 mm deep is to be designed to support an ultimate shear force of 130 kN. The uniform prestress across the section is 5 N/mm^2. The characteristic cube strength of the concrete is 40 N/mm^2 and steel is Fe 415 with bar dia. 8 mm. Design suitable spacing for the stirrups conforming to IS1343 recommendations for uncracked section. Assume cover to the reinf. as 50 mm. **[9]**

P.T.O.

Q3) a) A slab spanning 10 m is to be designed as a one way prestressed concrete slab with parallel post tensioned cables carrying an effective force of 600kN. The deck slab is required to support a udl of 25kN/m^2. The permissible stresses in concrete should not exceed 15 N/mm^2 in compression and no tension is permitted at any stage. Design the spacing of the cables and their position at mid span section. Assume loss ratio 0.8 **[8]**

b) Design a post tension two way slab of effective span 6 m × 7 m with continuity on all side, subjected to superimposed load 4 kN/m^2. Take F.F. load = 1.5 kN/m^2. Use cable S_3 or S_4, f_{ck} = 45 N/mm^2, f_y of S_3 or S_4 = 1900 N/mm^2. Design the spacing of cable in both direction. Don't apply checks. **[10]**

OR

Q4) a) A slab spanning 7 m is to be designed as a one way prestressed concrete slab with parallel post tensioned cables carrying an effective force of 620kN. The deck slab is required to support a udl of 25kN/m^2. The permissible stresses in doncrete should not exceed 15 N/mm^2 in compression and no tension is permitted at any stage. Design the spacing of the cables and their position at mid span section. Assume loss ratio 0.8. **[8]**

b) Design a post tension two way slab of effective span 5 m × 6 m with continuity on all sides, subjected to superimposed load 4 kN/m^2. Take F.F. load = 1.5 kN/m^2. Use cable S_3 or S_4 f_{ck} = 45 N/mm^2, f_y of S_3 or S_4 = 1900 N/mm^2. Design the spacing of cable in both directions. Don't apply checks. **[10]**

Q5) Design.a post tensioned flat slab for the following data **[18]**

Centre to centre distance between columns = 7.5m in both directions

Column size-750mm square

Floor is to be used for a shopping mall.

Live load-5 kN/m^2

Floor finish-1 kN/m^2

Materials- M40 , multistrand cables

Slab with drop

OR

Q6) Design a post tensioned flat slab for the following data **[18]**

Centre to centre distance between columns=7m in both directions

Column size-900mm diameter

Floor is to be used for an pharmaceutical company

Live load-4 kN/m^2

Floor finish-1 kN/m^2

Materials- M40 , multistrand cables

Slab with drop

Q7) Fig. shows a two span continuous beam. Corresponding to the cable profile provided locate the pressure line due to prestress alone. The prestressing force is 1200kN. **[17]**

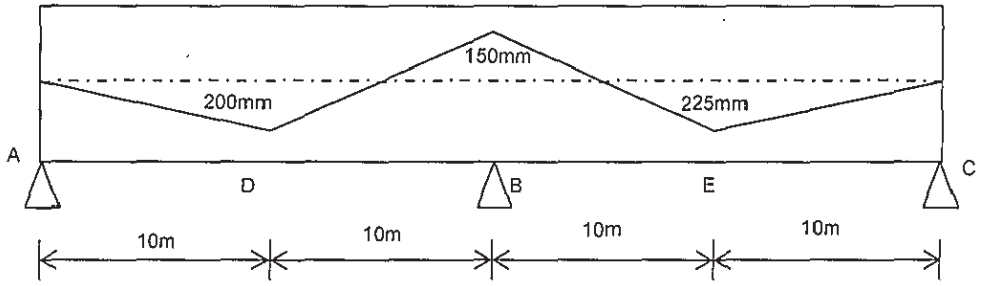

OR

Q8) Fig. shows a two span continuous beam. Corresponding to the cable profile provided locate the pressure line due to prestress alone. The prestressing force is 1000kN. **[17]**

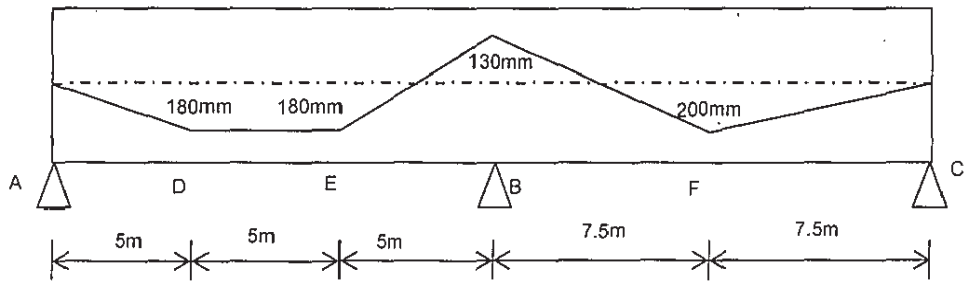

⌘⌘⌘

Total No. of Questions : 10]

SEAT No. :

P-6536

[Total No. of Pages : 2

[6181]-85

B.E. (Civil Engineering)

FORMWORK AND PLUMBING ENGINEERING

(2019 Pattern) (Semester - VII) (401004 F) (Elective - IV)

Time : 2½ Hours] *[Max. Marks : 70*

Instructions to the candidates:

1) ***Solve Q1 or Q2, Q3 or Q4, Q5 or Q6, Q7or Q8 & Q.9 or Q.10.***
2) ***Neat diagrams should be drawn wherever necessary.***
3) ***Figures to the right indicate full marks.***
4) ***Assume suitable data if necessary.***

Q1) Explain details steps for Formwork design of slab. **[10]**

OR

Q2) Explain details steps for Formwork design of beams & columns. **[10]**

Q3) Explain requirement and selection of good formwork in details. **[10]**

OR

Q4) Explain on formwork materials use in construction : **[10]**

a) Plywood

b) Steel

Q5) a) Explain horizontal wet vent and vertical wet vent with neat sketch. **[8]**

b) Comment on "plumbing system needs to breathe". State maximum value of pneumatic pressure difference in Pascal's so that the seal is protected, State vent terminals as per code. **[8]**

OR

Q6) a) How does grease trap works explain with neat sketch also explain its maintenance? **[8]**

b) State the trap requirements as per uniform plumbing code for Design of trap **[8]**

i) Trap seal and trap seal protection

ii) Trap setting and protection

P.T.O.

Q7) a) State requirements of a sanitary closet. Explain Washout Water Closets & Hopper Closets with neat sketch. **[8]**

b) Explain drainage air test & drainage water test procedures. **[8]**

OR

Q8) a) Explain sizing of house drain & sizing its vent pipe. **[8]**

b) Explain basic guide to calculate falls and gradients for drainage. **[8]**

Q9) a) Explain RCC, PVC, Nu-Drain and Stoneware for building sewers. **[8]**

b) Explain requirements for brick built manholes for sewer line with neat sketch. **[10]**

OR

Q10)a) Explain design of plumbing systems for multi-storey buildings. **[8]**

b) Explain drainage system considerations for multi-storey buildings. **[10]**

Total No. of Questions : 8]

SEAT No. :

P6537

[Total No. of Pages : 2

[6181]-86

B.E. (Civil Engineering)

DAMS AND HYDRAULICS STRUCTURES

(2019 Pattern) (Semester - VIII) (401011)

Time : 2½ Hours] *[Max. Marks : 70*

Instructions to the candidates:

1) ***Answer Q1 or Q2, Q3 or Q4, Q5 or Q6, Q7 or Q8.***
2) ***Neat sketches diagrams must be drawn wherever necessary.***
3) ***Figures to the right indicate full marks for the sub-questions.***
4) ***Assume suitable data if necessary and state them in your answer clearly.***
5) ***Use non-programmable pocket size electronic calculator is allowed.***

Q1) a) Define spillway & state its purpose. **[5]**

b) Enlist main components of spillway & explain Control structure. **[5]**

c) Design an ogee spillway for concrete gravity dam, for the following data. **[7]**

i) Average river bed level = 160 m

ii) Slope of D/S = 0.75 H : 1V, u/s face is vertical

iii) Spillway crest RL = 265 m

iv) Design discharge = 5530 m^3/s

v) Spillway length is 6 spans with a clear length of 7 m each.

vi) Pier thickness = 2m.

OR

Q2) a) Enlist type of energy dissipator & explain Ski jump type energy dissipater. **[5]**

b) State four types of spillway gate and explain any one with sketch. **[5]**

c) Explain the design criteria of U.S. type II stilling basin. Draw a neat sketch of the stilling basin. **[7]**

Q3) a) Briefly explain various causes of modes of failure of earthen dams. Draw relevant sketches. **[5]**

b) Describe the method of plotting phreatic line for an earth dam with horizontal filter at the downstream. **[5]**

c) With the help of appropriate sketches explain Swedish slip circle method of stability analysis of an earth dam. **[8]**

OR

P.T.O.

Q4) a) Explain the function of hearting and rock toe in earthen dam. **[5]**

b) Draw a neat sketch of a cross-section of earthen dam indicating the various components & explain any one component. **[5]**

c) Determine the factor of safety of downstream slope of (homogeneous section) an earth dam drawn to a scale of 1:650, for the following data: **[8]**

Area of N-rectangle = 20 cm^2
Area of T-rectangle = 10 cm^2
Area of U-rectangle = 5 cm^2
Length of slip circle arc = 20 cm
angle of internal friction = 26°
cohesion c = 24 kg/m^2
specific weight of soil = 18 kN/m^3

Q5) a) What is a canal? Explain types of canals based on function. **[5]**

b) Explain the advantage and disadvantages of lining of canals. **[5]**

c) Design a regime channel of trapezoidal section for carrying water at the rate 10 cumecs having side slopes 1 H: 2 V, if Lacey's slit factor is 0.90. **[7]**

OR

Q6) a) Write short note on. **[5]**

i) Canal falls
ii) Canal outlets

b) Write note on khosla's theory of independent variable. **[5]**

c) Briefly explain kennedy's theory. What are the drawbacks of Kenned's theory. **[7]**

Q7) a) Explain Khosla's theory of independent od seepage variable. **[5]**

b) Explain the importance of exit gradient. **[5]**

c) Draw a labelled sketch of diversion headworks Also enumerate the function of each component. **[8]**

OR

Q8) a) Explain in brief : **[5]**

i) Level crossing
ii) Super passage

b) Compare bligh's and lane's creep theores of seepage. **[5]**

c) Write note on khosla's theory application for design of structure on permeable foundations. Also explain the importance of exit gradient. **[8]**

Total No. of Questions: 8]

SEAT No. :

P6538

[Total No. of Pages : 5

[6181]-87
B.E (Civil)
QUANTITY SURVEYING CONTRACTS AND TENDERS
(2019 Pattern) (Semester-VIII) (401012)

Time : 3 Hours] ***[Max. Marks : 70***

Instructions to the candidates:

1) ***All questions are compulsory.***
3) ***Figures to the right indicate full marks.***
3) ***Assume Suitable data in wherver required.***

Q1) a) Fig. 1.a shows plan and section of residential building. Determine the quantities of following item By PWD Method or Center line Method (Assume any suitable data) **[10]**

i) Excavation in foundation

ii) PCC in Foundation

iii) UCR Masonry in CM (1:6) in foundation

iv) CR Masonry in CM (1:6) in foundation

v) Damp proof Course

b) Explain Different methods of taking out quantities. & Which factors to be considered during preparation of Detailed Estimate. **[8]**

OR

Q2) a) AR.C.C. Simply supported beam of 300 mm X 650mm is reinforced with 4 number of 20 mm diameter bars. The main bars are placed in one row and two bar bent up out of 4. Two top anchor bar of 12 mm diameter are provided and stirrups of 6 mm diameter are provided at 140 mm c/c span over beam of length 5.6m. End beraing is 30 cm. Calculate Quantity of Straight bar, Bent up bar Bar, Anchor Bar, & Stirrups Ref. Fig 2-a **[10]**

b) Explain the terms **[8]**

i) Bar Bending Schedule

ii) Types of Steel reinforcement

iii) Weight of Steel Bar

iv) Number of Bars or Stirrups

P.T.O.

Q3) a) Calculate the quantities of Earthwork is cutting and filling for road with following data **[10]**

i) Formation width of road is 12m

ii) Slope in cutting 1.5:1

iii) Slope in Banking 2:1

Chainage	0	30	60	90	120
GL in m	500	498.50	60.70	497	494
FL in m	497	496.50	496	495.5	495

b) List out different methods to workout Earth work quantity for road work. Explain any one method. **[8]**

OR

Q4) a) Calculate the quantities of Earthwork is cutting and filling for road with followind data **[10]**

i) Formation width of road is 10m

ii) Formation level of starting chainage is 50.40 m

iii) Side slope is 1:2 for filling and 1:1.5 in cutting

iv) The road surface shall be given falling gradient of 1:100

Chainage	0	30	60	90	120	150	180
GL	50.70	50.60	60.60	51.10	51.20	51.00	50.00

b) Differentiate between following methods **[8]**

i) Mid sectional area method & Mean Sectional area method.

ii) Trapezoidal formula method & Prismoidal formula method.

Q5) a) What is the necessity of drafting specification for Civil engineering work? Explain briefly **[9]**

i) General specification

ii) Detailed specification

b) Prepare a rate analysis of 12mm thick cement plaster (1:4) **[8]**

OR

Q6) a) Prepare a detailed Specification for plain cement concrete & Brick Masonry in Superstructure. **[9]**

b) What are the factors affecting rate analysis. Explain in details the procedure for rate analysis. **[8]**

Q7) a) What are the different types of value? Explain market value and any 5 factor affecting market value of property. **[6]**

b) Explain with example five purpose of valuation. **[5]**

c) Determine the present value of a building including land using following data: **[6]**

i) Income available from property: 9600 Rs/ per annum.

ii) Life of property: 80 years

iii) The rate for redemption is 6% and rate of interest on government securities is 5%.

iv) All outgoing: 35% of gross income.

v) Present cost of land: Rs. 30 lakhs.

OR

Q8) a) Explain **[6]**

i) Salvage value

ii) Book value

iii) Fair market value

b) State four methods of depreciation Explain any one detail. **[5]**

c) The depreciated replacement value of building has to be found out with the following data **[6]**

i) Total builtup area = 500m^2

ii) Age of building = 25 years

iii) Life of building = 90 years

iv) Scrap value after useful life = 10%

v) Percentage for sinking fund = 5%

Assume rate of construction as Rs. 2000/sq-m

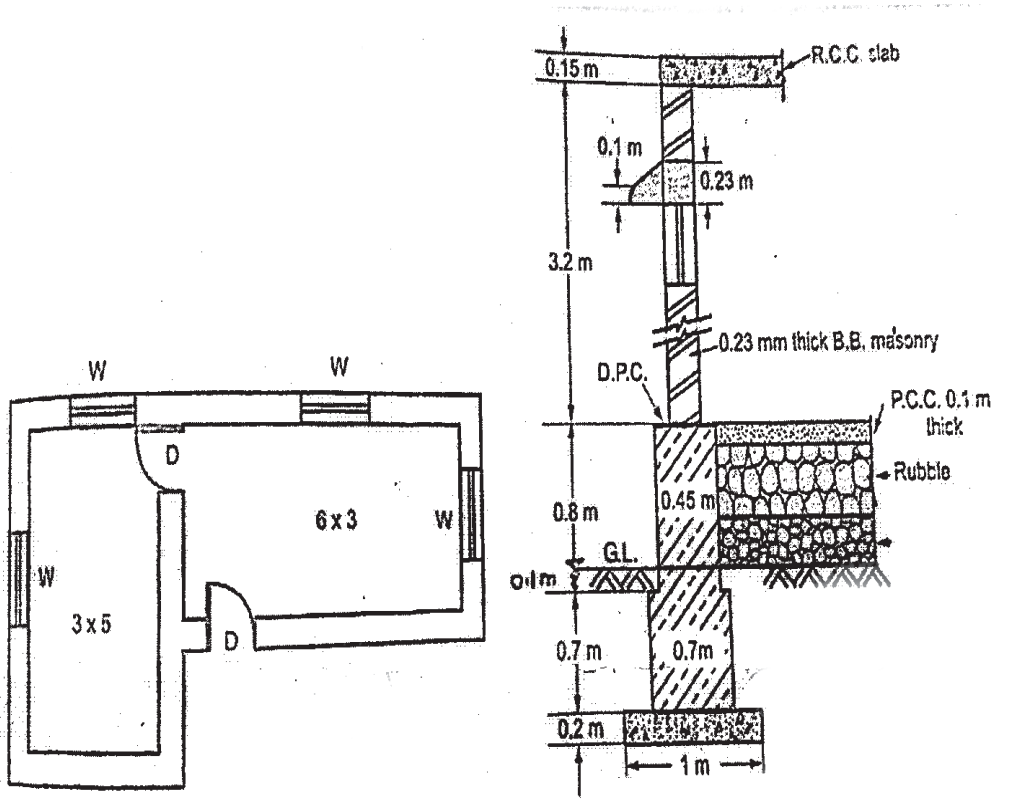

Fig.No. 1-a.

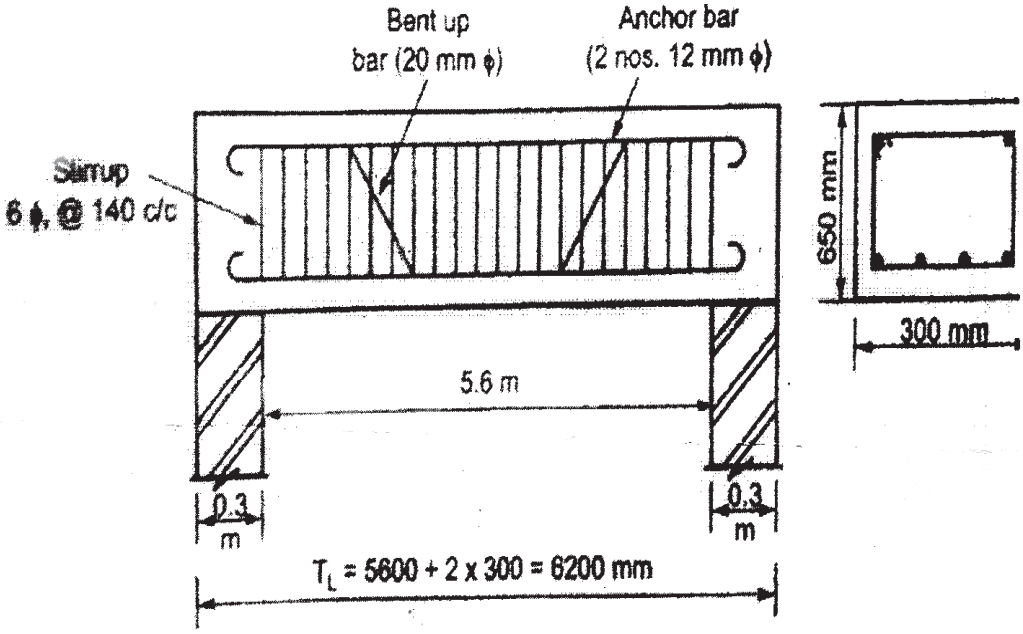

Fig. No. 2.a

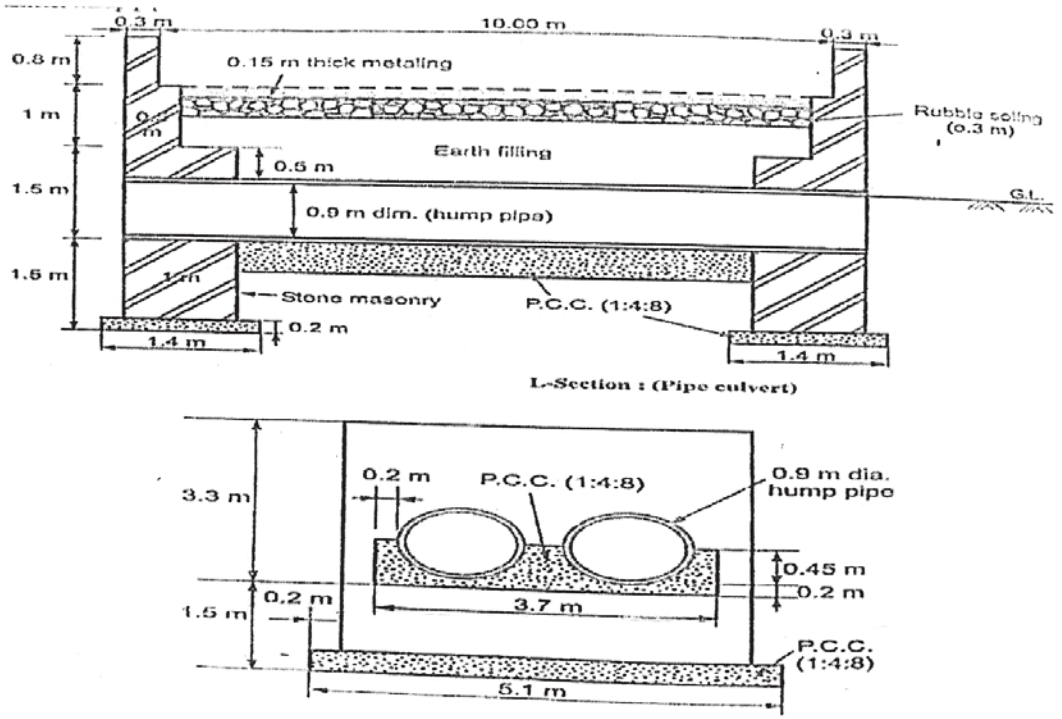
0.3 m
10.00 m
0.3 m
0.8 m
0.15 m thick metaling
1 m
Rubble soling
(0.3 m)
Earth filling
0.5 m
1.5 m
G.L.
0.9 m dim. (hump pipe)
1.5 m
Stone masonry
P.C.C. (1:4:8)
0.2 m
1.4 m
1.4 m
L-Section : (Pipe culvert)
3.3 m
0.2 m
P.C.C. (1:4:8)
0.9 m dia.
hump pipe
0.45 m
0.2 m
1.5 m
0.2 m
3.7 m
P.C.C.
(1:4:8)
5.1 m

Fig. No. 3-a

Total No. of Questions : 8]

SEAT No. : ____

P6539

[Total No. of Pages : 4

[6181]-88
B.E. (Civil)
EARTHQUAKE ENGINEERING
(2019 Pattern) (Semester - VIII) (Elective - V) (401013a)

Time : 2½ Hours] ***[Max. Marks : 70***

Instructions to the candidates:

1) ***Answer Q.1 or Q.2, Q.3 or Q.4, Q.5 or Q.6, Q.7 or Q.8.***
2) ***Bold figures to the right indicate full marks.***
3) ***Neat diagrams must be drawn wherever necessary.***
4) ***Use of IS 1893 Part I and non programmable calculator is allowed.***
5) ***Your answers will be valued as a whole.***
6) ***If necessary assume suitable data and indicate clearly.***

Q1) a) Obtain natural frequencies and mode shapes for the two storey shear frame shown and having equal lateral stiffness, k and lumped mass on roof level is half of that at first floor level. Represent the mode shapes graphically. **[10]**

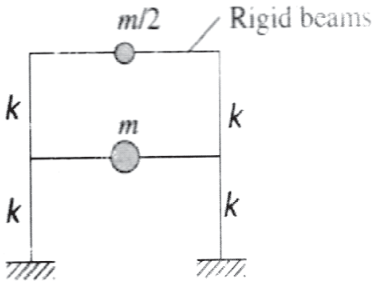

b) State and prove the orthogonality principle of modes of multi-degree freedom (MDOF) system. **[8]**

OR

Q2) a) Calculate natural frequencies and mode shapes for following cantilevered beam with masses lumped at mid-span and free end. Represent the mode shapes graphically. **[10]**

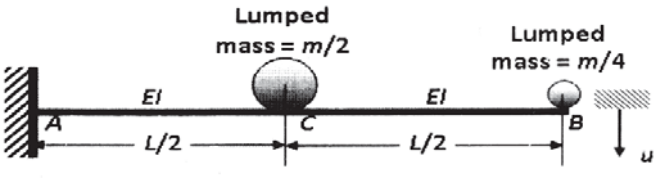

P.T.O.

b) Formulate the free vibration equations for following inverted L-shaped frame. **[8]**

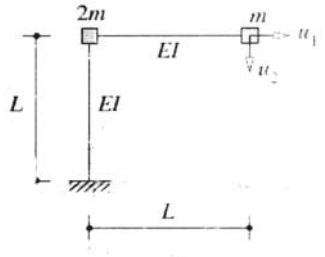

Q3) a) Following is plan of G+3 storey primary health center building located in Delhi. Two ductile RC frames provided in each orthogonal direction (A and C in X-direction and B and D in Y-direction) form lateral load resisting systems for this primary health center building. Assume this LLRS is without any masonry infill. The building has following data: **[12]**

Floor to floor height = 3.25m

Dead load per unit floor area = 4 kN/m^2

Live load per unit floor area = 3 kN/m^2

Live load on roof = 1.5 kN/m^2

Foundation soil = Hard

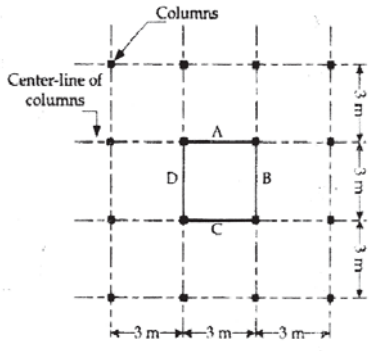

Workout:

i) Approximate fundamental time period, T_a of building

ii) Base shear, V_b

Using equivalent static method of seismic analysis evaluate:

1) Lateral forces at each floor level, Q_i

2) Storey shears, V_i

b) Explain the role of response reduction factor (R) in calculation of design base shear (V_b). **[5]**

OR

Q4) a) A three storey office building on hard strata located in Delhi consists of special steel moment resisting frame (SMRF) without any infill as a lateral load resisting system. Inter-storey height is 3.50 m. Seismic weights are 5000 kN and 4000 kN on floors and roof level, respectively. **[12]**

Workout:

i) Approximate fundamental time period, T_a

ii) Base shear, V_b

iii) Lateral force at each floor level by distributing the base shear (V_b) by equivalent static method of seismic analysis.

b) Explain equivalent static method of seismic analysis. **[5]**

Q5) The dynamic properties (natural periods, and mode shapes) of three storey reinforced concrete school building with special moment resisting frame as obtained from free vibration analysis in the X-direction are reported in following table. The floor to floor height is 4.0 m. The building is located in seismic zone V. The soil conditions are medium stiff and the entire building is supported on a raft foundation. Assume damping as 5% of critical damping. **[17]**

Floor,i	Seismic Weight, w_i (kN)	Mode, k		
		1	2	3
		T_1=1.63 sec	T_2 = 0.58sec	T_3 = 0.40 sec
		Mode shapes (ϕ_{ik})		
1	294.30	1.00	1.00	1.00
2	294.30	1.80	0.45	-1.25
3	294.30	2.25	-0.80	0.56

Using dynamic analysis, evaluate

a) Modal mass M_k;

b) Mode participation factor P_k;

c) Design lateral force at each floor in each mode Q_{ik};

d) Storey shear force in each mode, V_{ik}

e) Using SRSS rule for modal combination obtain the base shear

OR

Q6) a) A two-story office building is modeled as 2-DOF system with rigid floors. The building is located in seismic zone V. The soil conditions are medium stiff. Assume damping as 5% of critical damping and response reduction factor, R = 3. For following dynamic properties of building obtained from eigen value analysis, obtain the base shear using SRSS rule for modal combination, **[9]**

Floor, i	Seismic Weight, w_i (kN)	Mode, k	
		1	2
		T_1=1.00 sec	T_2 = 0.50 sec
		Mode shapes (ϕ_{ik})	
1	49.00	1.00	1.00
2	24.50	2.00	–1.00

b) Write short note on following: **[8]**

i) Dynamic method of seismic analysis.

ii) Modal combination rules.

Q7) a) Enlist any three lateral load resisting system (LLRS) with neat sketches. **[6]**

b) State advantages and limitations of any three lateral load resisting system (LLRS). **[12]**

OR

Q8) a) Define ductility of lateral load resisting system and explain significance of ductile detailing in earthquake resistance design of structure. **[9]**

b) Draw neat sketch representing ductile detailing for. **[9]**

i) Beam-column joint

ii) Column-footing joint

◀▶ ◀▶ ◀▶

Total No. of Questions : 8]

SEAT No. : ____

P6540

[Total No. of Pages : 3

[6181]-89
B.E. (Civil)
STRUCTURAL DESIGN OF BRIDGES
(2019 Pattern) (Semester - VIII) (Elective - V) (401013 B)

Time : 2½ Hours] ***[Max. Marks : 70***

Instructions to the candidates:

1) ***Answer Q.1 or Q.2, Q.3 or Q.4, Q.5 or Q.6, Q.7 or Q.8.***
2) ***Figures in bold to the right, indicate full marks.***
3) ***Neat diagrams shoulb be drawn where ever necessary.***
4) ***IS 1343, IRC 6, IRC 112, Birdge Rules and steel table are permitted in the examination.***

Q1) Design the intermediate prestressed post-tensioned concrete girder shown in Fig. 1. **[18]**

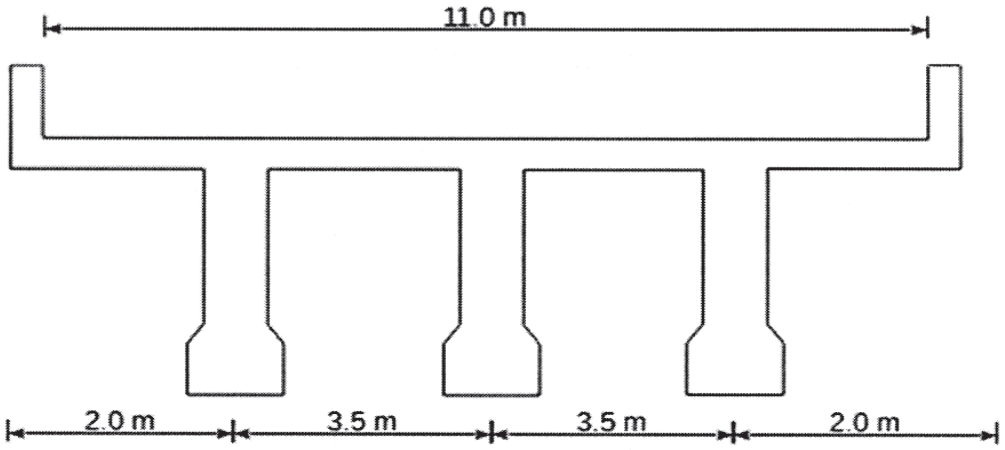

Fig. 1

The live load on the deck slab is IRC Class 70R loading. The following design parameters shall be considered for the design.

a) Grade of concrete for the girders = M-60;

b) Ultimate tensile of the steel = 1500 MPa;

c) Compressive strength of concrete at transfer = 38 MPa;

d) loss in the prestress = 12%. Any additional data may be suitably considered.

OR

P.T.O.

Q2) For the problem data given in Q.1, design the intermediate prestressed post-tensioned concrete girder, if the live load on the deck slab is IRC Class A tracked vehicle. **[18]**

Q3) A simply supported railway welded plate girder bridge is to be designed for the given data: **[17]**

a) Span = 21.0 m;

b) Total load for bending moment = 2800 kN;

c) Total load for shear force = 2149 kN;

d) CDA = 0.72;

e) Yield stress of steel = 250 N/mm^2. Design the cross section and the end stifdfeners. Assume suitably if additional data is required.

OR

Q4) For the data given in Q.3, design the cross section and the intermediate transverse stiffeners. **[17]**

Q5) Figure 2 shows the schematic of a single line BG railway bridge. **[18]**

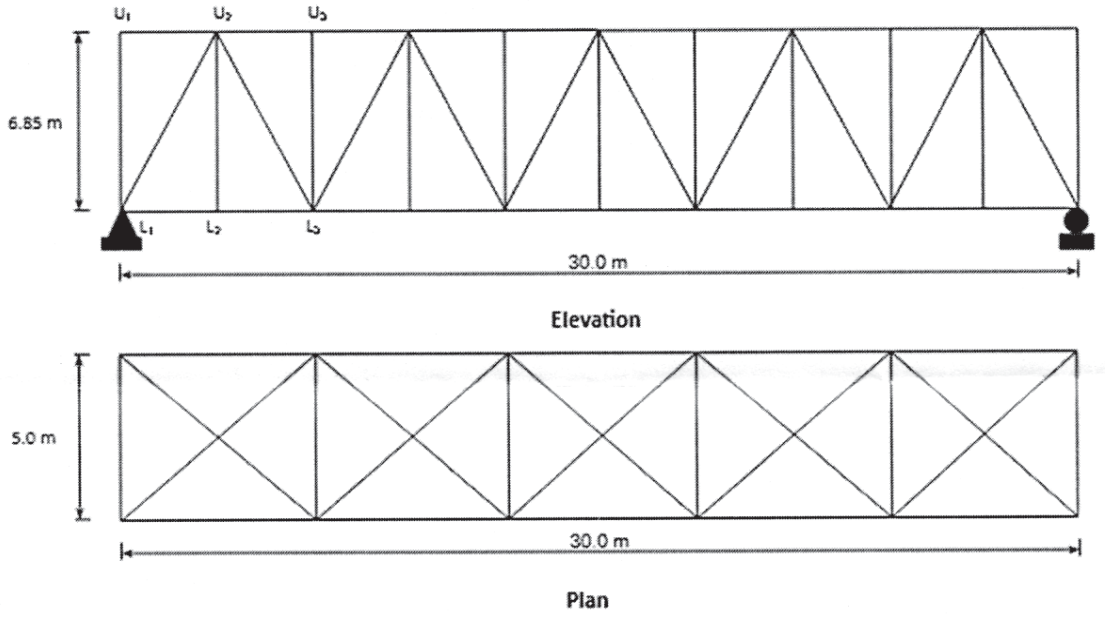

Fig. 2

The details for bridge are as follows:

a) Spacing of stingers = 1.8 m;

b) Weight of sleeper per meter on each girder = 0.65 kN/m;

c) Weight of rail per meter = 0.5 kN/m;

d) EUDL for bending moment and shear force = 3229 kN and 2880 kN respectively;

e) CDA = 0.44;

f) Intensity of wind load = 1.75 kN/m^2;

g) Racking force = 7.75 kN/m.

Design the stringers and the bracings for the stringers. If additional data is required, assume suitably and mention clearly.

OR

Q6) For the problem given in Q.6, design the members L_1-U_1, L_1-L_2, U_1-L_1, and U_2-L_2. **[18]**

Q7) a) What are the functions of bearings? Compare the different types of bridge bearings. **[8]**

b) Explain the design procedure for elastomeric bearings. **[9]**

OR

Q8) a) What are elastomeric bearings? Explain the different types. **[9]**

b) Explain the design procedure for steel bearings. **[8]**

◀▶ ◀▶ ◀▶

Total No. of Questions : 8]

SEAT No. : ____

P6541

[Total No. of Pages : 3

[6181]-90
B.E. (Civil)
IRRIGATION AND DRAINAGE
(2019 Pattern) (Semester - VIII) (Elective - V) (401013 C)

Time : 2½ Hours] ***[Max. Marks : 70***

Instructions to the candidates:

1) ***Answer Q.1 or Q.2, Q.3 or Q.4, Q.5 or Q.6, Q.7 or Q.8.***
2) ***Answers to the all questions should be written in single answer-book.***
3) ***Neat diagrams must be drawn wherever necessary.***
4) ***Figures to the right indicate full marks.***
5) ***Assume suitable data, if necessary.***

Q1) a) Draw a neat sketch of centrifugal pump. Explain its working. **[6]**

b) Draw a layout of drip irrigation system. Explain three component parts of drip irrigation system. **[6]**

c) Discuss two empirical equations used to estimate head loss in drip irrigation. **[6]**

OR

Q2) a) Why can the suction lift of a pump not exceed a certain limit? **[6]**

b) Enlist component parts of lift irrigation system. Explain how to calculate power requirement of centrifugal pump in lift irrigation. **[6]**

c) Discuss the design procedure for lateral line of drip irrigation system for uniform slope. **[6]**

Q3) a) Explain the steps for sprinkler irrigation system design. **[8]**

b) A sprinkler system is to be designed to irrigate 8 ha of the vegetable crop (Root zone depth = 60 cm) in deep silt loam soil (Limiting application rate = 1.3 cm/h; Mositure holding capacity = 9.5 cm/m depth) in a moderate dry climate. The field is flat. Assuming the allowable depletion level = 50%, water application efficiency = 75% and peak rate of mositure use by crop = 5 mm/day. Determine the net depth of water per application, the depth of water pumped per application, irrigation period and the required system capacity in ha - cm per day. Assuming that system is operated for 15 h each day, determine the pump capacity in lit/sec. **[9]**

OR

P.T.O.

Q4) a) Draw a labelled sketch showing components of a sprinkler irrigation system. What are advantages and disadvantages of sprinkler irrigation system. **[6]**

b) Explain with neat sketch Fertilizer Applicator in sprinkler irrigation system. **[5]**

c) Determine the required capacity of a sprinkler system to apply water at the rate of 1.25 cm/hr. Two 186 m long sprinkler lines are required. Sixteen sprinklers are spaced at 12 m intervals on each line. The spacing between lines is 18 m. **[6]**

Q5) a) What are the most common problems that result from using poor quality of irrigation water. **[6]**

b) Determine the depth of irrigation water which would change 30 cm depth of loam soil into saline soil condition, if the electrical conductivity of irrigation water is 1 millimhos/cm. The bulk density of the soil is 1.2 gm/cc and the density of water is 1 gm/cc. The saturation percentage of the soil is 40. **[6]**

c) Explain in brief-water stress coefficient. **[5]**

OR

Q6) a) Explain how to compute yield reduction due to salinity. **[5]**

b) Explain different engineering practices for salinity management. **[6]**

c) A quantity of 100 ml of gypsum solution, having 30 meq/1 concentration as calcium, on reacting with 6 gm of an alkali soil showed 29.5 meq/1 of Ca+Mg concentration in the filtrate. Estimate the gypsum requirement in meq/100 gm soil. **[6]**

Q7) a) Explain in brief:

i) clay tile pipe,

ii) concrete pipe,

iii) plastic pipe used for subsurface drainage system. **[6]**

b) Determine the required drain spacing (L) for the basic design criteria q = 6 mm/d, H = 0.65 m, pipe with outer diameter = 0.25m and wet entry perimeter (u) = 0.35 m. K_1 = 2.0 m/day, K_2 = 1.0 m/day. W = 1m, D = 3m. Refer Fig. 7(b). Use Hooghoudt's formula. Take only two trials. **[9]**

c) Write Glover-Dumm formula with meanings of all symbols. **[3]**

OR

Q8) a) Surface drainage should be planned for a new agricultural farm to drain out irrigation tail-water and seasonal rainfall runoff. The maximum rainfall intensity at the site in 20 years record is 32 mm/h. The tertiary drain would have to carry runoff from 3.5 ha land. The secondary drain would have to carry thrice of tertiary, and the main drain to carry discharge of five secondary drains (of similar flow). Determine the design discharge capacity of the **[9]**

i) tertiary,

ii) secondary, and

iii) main drain.

b) Explain different types of sub surface drainage system layouts. **[6]**

c) What are the advantages of sub surface drainage system? **[3]**



Total No. of Questions : 8]

SEAT No. :

P6542

[Total No. of Pages : 3

[6181]-91
B.E. (Civil)
DESIGN OF PRECAST AND COMPOSITE STRUCTURES
(2019 Pattern) (Semester - VIII) (Elective - V(d)) (401013 D)

Time : 2½ Hours] *[Max. Marks : 70*

Instructions to the candidates:

1) ***Solve Q.1 or Q.2, Q.3 or Q.4, Q.5 or Q.6, Q.7 or Q.8.***
2) ***Assume suitable data if necessary.***
3) ***Figures to the right indicate full marks.***
4) ***Mere reproduction from Code as answer will not be given full credit.***

Q1) a) Discuss the construction and design principles of columns in the context of prefabrication. How does the study of IS: 15916 contribute to the design and application of precast concrete columns. **[7]**

b) Design a simple rectangular precast concrete beam for a given data, **[10]**

Dead load (DL) = 30 kN/m

Live load (LL) = 20 kN/m

Clear span (L) = 6 meters

OR

Q2) a) Discuss the handling and erection stresses associated with precast concrete beams. Explain the measures taken to eliminate or reduce these stresses during the erection process. **[7]**

b) Design an I-beam precast concrete member for a span of 8 meters subjected to the given loading: **[10]**

Dead load (DL) = 25 kN/m

Live load (LL) = 20 kN/m

Self-weight of the beam (SW) = 15 kN/m, check for erection stresses

Q3) a) Explain the concept of composite construction and its basic principles. Discuss the advantages and applications of composite construction in the building industry. **[7]**

b) Compare teh different types of composite construction methods commonly used, with an example and discuss their suitability for different structural applications. **[10]**

OR

P.T.O.

Q4) a) Explain the advantages and challenges associated with steel-concrete composite construction. **[7]**

b) Design a simply supported composite beam with a solid steel section for a span of 6 meters subjected to: **[10]**

Dead load (DL) = 25 kN/m

Live load (LL) = 15 kN/m

Q5) a) Discuss the types of shear connectors commonly used in the connection between concrete slabs and beams. Explain the function of shear connectors in composite structures and their role in achieving composite action. **[8]**

b) Design the appropriate type and layout of shear connectors for a composite slab-beam connection subjected to the following. **[10]**

Dead load (DL) = 30 kN/m

Live load (LL) = 20 kN/m

Slab thickness (t) = 150 mm

OR

Q6) a) Explain the analysis and design considerations for shear connection between a concrete slab and a steel beam. Discuss the factors influencing the shear transfer mechanism and the requirements for achieving composite action. **[8]**

b) Analyze and design the shear connection between a concrete slab and a steel beam for a specific composite structure. The composite structure has the following properties and loading conditions: **[10]**

Concrete slab thickness (t_c): 150 mm

Steel beam flange thickness (t_bf): 20 mm

Steel beam web depth (d_b): 300 mm

Dead load (DL): 30 kN/m

Live load (LL): 20 kN/m

Q7) a) Explain the design principles and considerations for steel-concrete composite columns. Discuss the advantages and applications of composite columns in structural engineering. **[8]**

b) Design a steel-concrete composite column subjected to axial loads and moments for a given structural scenario. Consider the following details: **[10]**

Axial load (N): 500 kN

Bending moment (M): 200 kNm

Concrete grade: M30

Steel reinforcement grade: Fe415

OR

Q8) a) Describe the concept of encased composite construction for beams and columns. Discuss the benefits of using encased composite construction and the design considerations involved. **[8]**

b) Design an encased composite column with

Axial load (N): 800 kN

Bending moment (M): 300 kNm **[10]**

Total No. of Questions : 8]

SEAT No. :

P6543

[Total No. of Pages : 3

[6181]-92
B.E. (Civil)
HYDROPOWER ENGINEERING
(2019 Pattern) (Semester - VIII) (Elective - V) (401013 E)

Time : 2½ Hours] ***[Max. Marks : 70***

Instructions to the candidates:

1) ***Answer any one from questions Q.1 or Q.2, Q.3 or Q.4, Q.5 or Q.6, Q.7 or Q.8.***
2) ***Neat diagrams must be drawn wherver necessary.***
3) ***Figures to the right indicate full marks.***
4) ***Assume suitable data, if necessary and mention it clearly.***
5) ***Use of non-programmable calculator is allowed.***

Q1) a) What is power curve? How it is plotted and state its drawbacks. **[8]**

b) A Pelton wheel of 3m runner works under a head of 800 m. It runs at 60 r.p.m. The discharge rate into runner is $3m^3/s$. Find: **[9]**

i) Input power to runner.

ii) Shaft power from runner having mechanical efficiency of 92%

iii) Net power output if generator is 96% efficient

iv) Specific speed of turbine.

OR

Q2) a) A thermal power plant consists of 2 × 60 MW units running for 8000 hours and one 30 MW unit running for 2000 hrs per year. Energy produced by the plant is 876×10^6 kWh per year. Determine plant load factor and plant use factor. Assume maximum demand is equal to the plant capacity. **[8]**

b) Discuss the effect of variation of load factor and diversity factor on the design of power plants. **[9]**

Q3) a) What is the function of intake system in hydropower plants? Explain the various components of intake structure. **[9]**

b) What are the types of transformers? Name some of the transformers used in power generating station. **[9]**

OR

P.T.O.

Q4) a) What are the types of underground power stations? Explain any one type with neat sketch. **[9]**

b) Explain Flow meters with neat sketch. **[9]**

Q5) a) A Pelton wheel develops 8421 kW of shaft power under a head of 320 m. Speed of rotation of wheel is 700 rpm and its overall efficiency is 87%. Assuming coefficient of velocity of jet 0.98, speed ratio as 0.45 and jet ratio as 6, find the wheel diameter, the diameter of jet and number of jets required. **[8]**

b) What is the role of a draft tube? Sketch various types of draft tubes. Define with formula efficiency of draft tube. **[9]**

OR

Q6) a) Discuss the hydraulic design of surge tanks for its height and cross sectional area. **[8]**

b) A hydro power project has a 2500 m long tunnel of 5 m diameter. A surge tank of circular cross section is provided at the end of tunnel whose diameter is 14m. Power house is supplied water from a single penstock of 1000 m length and 2.8 m diameter. The friction factor for tunnel is 0.02 and it is 0.028 for the penstock. Velocity of sound wave is 300 m/s. Under steady state conditions the reservoir has a head of 600 m and the discharge is $30 m^3/s$. Compute the following when the gate valve is suddenly closed. **[9]**

i) Maximum water hammer pressure head neglecting friction.

ii) Maximum upsurge when friction is taken into account.

iii) Maximum down surge.

iv) Time period of oscillation.

Q7) a) A power plant of 210 MW installed capacity has the following particulars: Capital cost: Rs. 18,000/kW installed capacity. **[10]**

Interest and depreciations: 12%; Annual load factor : 60%

Annual capacity factor: 54%; Annual running charges Rs. 200×10^6

Energy consumed by power plant auxiliaries = 6%

Calculate

i) Cost of power generation for kWh

ii) Reserve capacity.

b) What is meant by tariff? Explain straight line meter rate, two part tariff and three part tariff rates. **[8]**

OR

Q8) a) The energy cosumption of an industrial consumer is 6000 kWh per month with the maximum demand of 20 kW. Demand rate as per Hopkinson charges are as follows: **[10]**

0-8 kW = Rs. 60 per kW

9-14 kW = Rs. 40 per kW

15-20 kW = Rs. 30 per kW

First 500 kWh = Rs. 1 per kWh

Next 2000 kWh = Rs. 0.8 per kWh

Remainder = Rs. 0.5 per kWh

Find the monthly bill and average cost of energy for the consumer as per Hopkinsons tariff rate method.

Also determine the maximum possible charges for the month and unit energy cost for given energy consumption.

b) Write a detailed note on carbon credits and its implications on clean technology. **[8]**



Total No. of Questions : 8]

SEAT No. : ____

P6544

[Total No. of Pages : 2

[6181]-93
B.E. Civil
STRUCTURAL AUDIT AND RETROFITTING OF STRUCTURES
(2019 Pattern) (Semester - VIII) (Elective - V) (401013 F)

Time : 2½ Hours] ***[Max. Marks : 70***

Instructions to the candidates:

1) ***Solve Q.1 or Q.2, Q.3 or Q.4, Q.5 or Q.6, Q.7 or Q.8.***
2) ***Neat digrams must be drawn wherver necessary.***
3) ***Figures to the right indicate full marks.***
4) ***Assume suitable data, if necessary.***
5) ***Use of electronic pocket calculator allowed.***
6) ***Use of cell phone is prohibited in the examination hall.***

Q1) a) Explain in details the differences between short-term and long-term monitoring in structural health monitoring. **[9]**

b) Explain in details the process of data acquisition in structural health monitoring. **[9]**

OR

Q2) a) Explain in details Local and Global techniques for SHM. Also explain active and passive monitoring. **[9]**

b) Explain instrumentation, data acquisition and data processing in SHM. **[9]**

Q3) a) Explain the concept of mass reduction technique in retrofitting? How does this technique contribute to enhancing the seismic performance of structures? **[8]**

b) Explain role of jacketing in retrofitting of structures with a suitable example. **[9]**

OR

Q4) a) Explain suitability of various retrofitting techniques for RC structures, steel structures and masonry structures. **[8]**

b) Explain base isolation technique in retrofitting with suitable example. **[9]**

P.T.O.

Q5) a) What is Fiber Reinforced Polymer (FRP) and how does it enhance the structural performance of reinforced concrete elements? **[9]**

b) How is FRP retrofitting carried out using FRP plates? What are the steps involved and how does the application of FRP plates improve the structural behavior of elements? **[9]**

OR

Q6) a) Explain the mechanical property of FRP material for retrofitting of structures. **[9]**

b) Explain the procedure for Retrofitting of RC columns using FRP for axial confinement as per provisions of ACI 440. **[9]**

Q7) a) Describe the steps involved in the analysis and design of an RC beam using FRP for flexural strengthening. **[8]**

b) Describe the use of FRP contribute to increasing the flexural strength and ductility of RC beams. **[9]**

OR

Q8) a) Describe the procedure for Retrofitting of RC Beams using FRP for shear strengthening as per provisions of ACI440. **[8]**

b) Explain in details retrofitting of damaged structure using FRP. **[9]**



Total No. of Questions : 10]

SEAT No. :

P6545

[Total No. of Pages : 2

[6181]-94
B.E. (Civil Engineering)
TQM AND MIS
(2019 Pattern) (Semester - VIII) (401014A) (Elective - VI)

Time : 2½ Hours] *[Max. Marks : 70*

Instructions to the candidates:

1) ***Answer Q.1 or Q.2, Q.3 or Q.4, Q.5 or Q.6, Q.7 or Q.8. & Q.9 or Q.10.***
2) ***Neat diagrams should be drawn wherever necessary.***
3) ***Figures to the right indicate full marks.***
4) ***Assume suitable data if necessary.***

Q1) a) Explain in details any two definitions of quality with example. **[6]**

b) Explain in details various barriers in implementation of TQM in construction industry? **[6]**

OR

Q2) a) Explain in details benefits of applying TQM on construction site. **[6]**

b) Explain in details six sigma? Explain it's important in construction sector. **[6]**

Q3) a) Explain any 4 common construction defects with remedies. **[6]**

b) Explain the historical evolution of TQM. **[6]**

OR

Q4) a) Explain in details principles of ISO 9001 and explain any two. **[6]**

b) Explain in details a checklist for form work activity at various stages of work. **[6]**

Q5) a) Explain in details contests of quality manual? Describe in brief. **[8]**

b) Explain in details on: Conformity & Non-Conformity. **[6]**

OR

Q6) a) Explain CONQAS with suitable example. **[8]**

b) Explain 5s campaign of KAIZEN **[6]**

Q7) a) Explain in brief cost of Quality with case study. **[8]**

b) Explain in details Quality circle? Explain the benefits & limitations of the same. **[8]**

OR

Q8) a) Explain in brief "Failure Mode Effect Analysis (FMEA)". **[8]**

b) Explain in details data & Information with suitable example. **[8]**

Q9) a) Explain in details MIS? Explain benefits and limitations of MIS. **[8]**

b) Explain in details any two International quality awards. **[8]**

OR

Q10)a) Explain advantages and limitations of MIS in implementation on construction site. **[8]**

b) Construction activities will effectively managed by using MIS, explain in details. **[8]**

Total No. of Questions : 8]

SEAT No. :

P6546

[Total No. of Pages : 3

[6181]-95
B.E. (Civil Engineering)
ADVANCED TRANSPORTATION ENGINEERING
(2019 Pattern) (Semester - VIII) (Elective - VI (401014 B)

Time : 2½ Hours] *[Max. Marks : 70*

Instructions to the candidates:

1) ***Answer Q.1 or Q.2, Q.3 or Q.4, Q.5 or Q.6, Q.7 or Q.8.***
2) ***Figures to the right indicate full marks.***
3) ***Neat diagrams must be drawn wherever necessary.***
4) ***Draw neat figures wherever necessary.***
5) ***Assume suitable data, if necessary.***

Q1) a) Explain the role of mobility and non motorized transport (NMT) in sustainable development. **[6]**

b) Write a short note on Pedestrain actuated signals. **[6]**

c) Explain the principles pedestrain facility design as per IRC 11-2015 **[6]**

OR

Q2) a) Discuss the benefits of Non-Motorized Transportation NMT System. **[6]**

b) How can NMT help in Urban transport planning? **[6]**

c) What is active transport in NMT? Explain its Types. **[6]**

Q3) a) Write a short on Greenshield's model. **[5]**

b) Explain the concept of level of service **[6]**

c) The average normal flow of traffic on cross roads A and B during design period are 400 and 250 PUC per hour; the saturation flow values on these road are estimated as 1250 and 1000 PCU per hour respectively. The all-red time require for pedestrian crossing is 12 sec. Design two phase traffic signal with pedestrian crossing by Webster's Method. **[6]**

OR

P.T.O.

Q4) a) Explain the terms basic capacity, possible capacity and practical capacity. **[5]**

b) Discuss briefly the various factors affecting the practical capacity of roads. **[6]**

c) Explain the terms basic capacity, possible capacity and practical capacity. **[6]**

Q5) a) What are the advantages and limitations of flexible pavement. **[6]**

b) Explain the overview of design of flexible pavement as per IRC 37-2018. **[6]**

c) Determine the Equivalent Wheel Load Factor or VDF value of the following two axle loads in terms of the standard axle load of 8.16t. **[6]**

i) LCV with rear axle load of 1.8 t

ii) HCV with rear axle load of 16.0 t

OR

Q6) a) Determine the total thickness of flexible pavement assuming single layer **[6]**

elastic theory using following data:

Design wheel load = 4200kg

Tyre Pressure = 6.0 kg/cm^2

Elastic Modulus = 150 kg/cm^2

permissible Deflection = 0.25

b) Explain pavement unevenness, skid resistance & its measurements as per IRC guidelines. **[6]**

c) What are the different types of pavement maintenance as per IRC: 82? Also state the importance of pavement maintenance. **[6]**

Q7) a) Calculate the wheel load stresses at interior and corner regions of a concrete pavement using Westergaard's equations on the basis of following data: **[10]**

Wheel Load = 4100 kg

Modulus of Elasticity of concrete = 3.0×10^5 kg/cm^2

Pavement thickness = 15 cm

Poisson's ratio = 0.15

Modulus of subgrade reaction = 3.0 kg/cm^2

Radius of contact area = 15 cm

b) State the various types of joints in concrete pavements. Explain any one in detail. **[7]**

OR

Q8) a) What are the different types of overlays that may be considered for strengthening existing flexible pavements? Mention their relative advantages. **[10]**

b) Explain with neat sketches the various distresses in rigid pavements. **[7]**

Total No. of Questions : 8]

SEAT No. :

P6547

[Total No. of Pages : 2

[6181]-96
B.E. (Civil Engineering)
GEO-SYNTHETIC ENGINEERING
(2019 Pattern) (Semester - VIII) (Elective - VI) (401014 C) (Theory)

Time : 2½ Hours] *[Max. Marks : 70*

Instructions to the candidates:

1) ***Answer Q.1 or Q.2, Q.3 or Q.4, Q.5 or Q.6, Q.7 or Q.8.***
2) ***Neat diagrams must be drawn whenever necessary.***
3) ***Figures to the right side indicate full marks.***
4) ***Assume suitable data, if necessary and mention it clearly.***
5) ***Use of non-programmable calculator is allowed.***

Q1) a) Discuss briefly with sketches the process of Erosion control with Geo-grids. **[9]**

b) Explain the design steps for re-composite drainage. **[9]**

OR

Q2) a) Describe the applications of Geo-synthetics in geo environment. **[9]**

b) What are the five major functions of Geo-synthetics? **[9]**

Q3) a) What are the benefits of using the geo-textile layer or layers in the construction of unpaved roads? **[8]**

b) Write a note on mechanism and concept of pavement. **[9]**

OR

Q4) a) What are the advantages of use of Geo-synthetics in pavement design? **[8]**

b) Describe the Giroud and Noiray method of pavement design. **[9]**

Q5) a) Write the importance of reinforced earth walls. **[8]**

b) Describe the design of geo-synthetics wrap around face wall **[9]**

OR

P.T.O.

Q6) a) Explain in detail construction procedure of soil reinforcement. **[8]**

b) Write a note on: **[9]**

i) Geo-grid reinforced soil wall

ii) Geo-cell wall

Q7) a) Explain the role of geo-synthetic material in soil stabilization. **[6]**

b) Describe the design of encased stone column with neat sketch. **[6]**

c) Write a note on ground instrumentation and monitoring in ground improvement. **[6]**

OR

Q8) a) Explain the bearing capacity improvement method with geo-grid. **[6]**

b) Write a note on consolidation technique in ground improvement. **[6]**

c) Discuss the mechanism of geo-cell reinforced sand overlying soft clay. **[6]**

Total No. of Questions : 8]

SEAT No. :

P6548

[Total No. of Pages : 2

[6181]-97
B.E. (Civil Engineering)
STRUCTURAL DESIGN OF FOUNDATIONS
(2019 Pattern) (Semester - VIII) (Elective - VI) (401014 D)

Time : 2½ Hours] *[Max. Marks : 70*

Instructions to the candidates:

1) ***Answer Q.1 or Q.2, Q.3 or Q.4, Q.5 or Q.6, Q.7 or Q.8.***
2) ***Neat diagrams must be drawn wherever necessary.***
3) ***Figures to the right side indicate full marks.***
4) ***Use of electronic pocket calculator is allowed.***
5) ***Use of cell phone is prohibited in the examination hall.***

Q1) a) Discuss types of Pile Foundation based on their classification. **[6]**

b) A concrete pile 20 cm diameter is driven into a medium dense sand $\varnothing = 35^{\circ}$, $\gamma = 21 KN/m^3$, k = 1.0, tan $\delta = 0.70$ for a depth of 8 m. Estimate the safe load. Take Factor of safety = 2.5. **[6]**

c) Explain in detail Negative Skin Friction and its effects on pile. **[6]**

OR

Q2) a) Discuss in details static method for estimation of load capacity of bored piles. **[6]**

b) A 30 cm diameter concrete pile is driven in a homogenous consolidated clay deposit. Take Cu = 40 KN/m^2, α = 0.7 and Factor of safety = 2.5. If embedded length is 10 m, estimate safe load. **[6]**

c) Explain in detail pile subjected to uplift load and laterally loaded piles. **[6]**

Q3) a) Explain the different Shapes of Well Foundation. Also explain the advantages of each. **[6]**

b) Explain Grip Length and its importance in well Foundation. **[6]**

c) Explain various components of Pneumatic caissons with the help of neat Sketch. **[6]**

OR

P.T.O.

Q4) a) Discuss the various types of forces acting on Well Foundation. **[6]**

b) Explain stability of Floating Caissons with the help of neat sketch. **[6]**

c) Discuss the Advantages and Disadvantages of Pneumatic Caisson over Open Caissons. **[6]**

Q5) a) Discuss the General Criteria for Design of Machine Foundation. **[9]**

b) Determine the Coefficient of uniform compression if a vibration test on a block 1m×1m×1m gave a resonance frequency of 30 Hz in the vertical direction. The mass of the oscillator used was 60 Kg. **[8]**

OR

Q6) a) Discuss the various parameters in vibration analysis of Machine Foundation. Also explain the procedure to determine these Parameters. **[9]**

b) A 2.50 mg vertical compressor foundation system is operated at 40 Hz. The soil at the site is medium stiff clay (Cu = 4×10^4 kN/m^3). Determine the natural frequency and the magnification factor, assuming $m_s = 0.2\ m_f$. The base area is 2.5 m^2. Take D = 0. **[8]**

Q7) a) Define Retaining Wall and Explain their Types with neat Sketch. **[7]**

b) Explain design procedures for Rigid and Flexible Retaining Walls. **[10]**

OR

Q8) a) Define Retaining Wall and Explain its construction methods. **[7]**

b) Explain various types of Pile walls with neat sketch. **[10]**

Total No. of Questions : 8]

SEAT No. :

P6549

[Total No. of Pages : 2

[6181]-98
B.E. (Civil)
GREEN STRUCTURES AND SMART CITIES
(2019 Pattern) (Semester - VIII) (Elective - VI) (401014 E)

Time : 2½ Hours] *[Max. Marks : 70*

Instructions to the candidates:

1) ***Answer Q.1 or Q.2, Q.3 or Q.4, Q.5 or Q.6, Q.7 or Q.8.***
2) ***Neat diagrams must be drawn wherever necessary.***
3) ***Figures to the right side indicate full marks.***
4) ***Assume suitable data, if necessary.***

Q1) a) What is Building Integrated Photovoltaic (BIPV) technology, and how is it different from conventional solar panels? **[6]**

b) Explain in detail about Overall Thermal Transfer Value (OTTV). **[6]**

c) How can architects and building designers integrate BIPV technology into their designs effectively? **[5]**

OR

Q2) a) What are the most common types of BIPV systems, and what are their respective applications? **[6]**

b) What are the key requirements and standards set by ECBC-2017 for new and existing buildings? **[6]**

c) What is the role of government and regulatory bodies in promoting the adoption of ECBC-2017? **[5]**

Q3) a) What are dimensions of Smart Cities? **[6]**

b) How can smart cities contribute to sustainable development and the achievement of the sustainable Development Goals? **[6]**

c) Compare conventional city components and smart city components. **[6]**

OR

P.T.O.

Q4) a) What are some of the technologies that are commonly used in smart cities, and how to they contribute to their functionality? **[6]**

b) What is green approach to meet energy demand? **[6]**

c) How can smart city components be integrated into existing infrastructure, and explain the challenges associated with this process? **[6]**

Q5) a) What is global experience of smart cities? **[6]**

b) What are the different consequences as observed in conventional cities? **[6]**

c) Write a note on India's "100 smart cities" policy and mission. **[5]**

OR

Q6) a) What are the challenges that conventional cities face in terms of sustainability and efficient resource use? **[6]**

b) What are the factors that should be considered when selecting global standards and performance benchmarks for a smart city project? **[6]**

c) Write a note on smart city planning and development. **[5]**

Q7) a) Explain in details: financing smart cities development with appropriate example. **[6]**

b) Write a note on Swachh Bharat mission and smart cities program. **[6]**

c) What role can green spaces and urban agriculture play in improving the quality of life in conventional cities? **[6]**

OR

Q8) a) Write a note on the importance of SDG 11. **[6]**

b) How is artificial intelligence used in Smart Cities? **[6]**

c) Explain the role fo public-private partnerships in financing smart city projects in India. **[6]**

Total No. of Questions : 8]

SEAT No. :

P6550

[Total No. of Pages : 2

[6181]-99
B.E. (Civil Engineering)
RURAL WATER SUPPLY AND SANITATION
(2019 Pattern) (Semester - VIII) (Elective - VI) (401014F)

Time : 2½ Hours] *[Max. Marks : 70*

Instructions to the candidates:

1) ***Answer Q.1 or Q.2, Q.3 or Q.4, Q.5 or Q.6, Q.7 or Q.8.***
2) ***Figures to the right indicate full marks.***
3) ***Draw neat figures wherever necessary***
4) ***Assume required data if necessary.***
5) ***Use of scientific calculators is allowed.***

Q1) Attempt the following questions.

a) What are the key features and objectives of piped water supply schemes in rural areas? **[6]**

b) How do rainwater harvesting systems contribute to rural water supply, and what factors affect their effectiveness? **[5]**

c) What is scour depth, and why is it important to calculate it when locating a well in a riverbed or on a bank? Discuss the potential risks and consequences of inadequate scour depth estimation. **[6]**

OR

Q2) Attempt the following questions.

a) Discuss the principles and functioning of a community-managed piped water supply scheme in rural areas. What are the key steps involved in establishing and sustaining such a scheme? **[6]**

b) What are the essential components of a typical water supply scheme? Describe the roles and functions of each component, such as intake structures, treatment plants, storage facilities, and distribution networks. **[5]**

P.T.O.

c) Describe the design and operation of an intake Jack well (pump house). What are its key components, and how does it function to extract water from underground sources? Discuss the advantages and limitations of using a Jack well as an intake structure. **[6]**

Q3) Attempt the following questions.

a) What are the interdisciplinary aspects involved in the implementation of rural water supply projects? **[6]**

b) Explain the significance of involving experts from fields such as engineering, hydrology, public health, and social sciences in rural water supply projects. **[5]**

c) What are the challenges in achieving interdisciplinary collaboration in rural water supply projects, and how can they be overcome? **[6]**

OR

Q4) Answer the following questions.

a) What is hydraulic testing, and why is it conducted on pipelines? **[5]**

b) What are the key criteria for determining the location and spacing of surge tanks and air valves in a rising main system? **[6]**

c) Discuss the challenges and potential issues that can arise during hydraulic testing of pipelines and how they can be addressed **[6]**

Q5) Answer the following questions.

a) How do level sensors help in monitoring water levels in reservoirs, tanks, and wells, facilitating efficient management of water resources and demand? **[6]**

b) Write a brief note on SCADA based automation and PLC in water supply systems. **[6]**

c) Discuss the following

i) Remote monitoring and control **[3]**

ii) Data logging **[3]**

OR

Q6) Answer the following questions.

a) Explain in detail what do you understand by GIS? Give the applications of GIS in water supply engineering. **[6]**

b) Discuss the potential future applications and advancements in pH sensor technology for water quality monitoring. **[6]**

c) How can emerging trends like sensor networks online monitoring, or real-time data analytics contribute to enhanced pH monitoring. **[6]**

Q7) Answer the following questions.

a) Explain the process of periodical maintenance of pumping machinery, used in water supply systems along with necessary documentation required. **[9]**

b) Explain the necessity of training to villagers on operation and maintenance issues likely to be encountered in water supply systems. **[9]**

OR

Q8) Answer the following questions.

a) Explain the process of periodical maintenance of electrical components used in water supply systems along with necessary documentation required. **[9]**

b) Give a brief note on leakage detection techniques and its necessity in water supply systems. **[9]**

Total No. of Questions : 8]

SEAT No. : ____

P-6551

[Total No. of Pages : 3

[6181]-101
B.E. (Computer Engineering)
DESIGN AND ANALYSIS OF ALGORITHM
(2019 Pattern) (Semester-I) (410241)

Time : 2½ Hours] ***[Max. Marks : 70***

Instructions to the candidates :

1) ***Answer Q1 or Q2, Q3 or Q4, Q5 or Q6, Q7 or Q8.***
2) ***Neat diagrams must be drawn wherever necessary.***
3) ***Figures to the right indicate full marks.***
4) ***Assume suitable data, if necessary.***

Q1) a) Write High-level description of job sequencing algorithm. Let number of jobs (n)=5; Profit vector P={20, 15, 10, 5, 1); Deadline vector D={2, 2, 1, 3, 3) Find the feasible solutions. What is the optimal solution and maximum profit? **[9]**

b) Consider the following instance of the knapsack problem. Find the optimal solution by using dynamic programming approach. **[9]**

Item	Weight	Profit
1	2	$12
2	1	$10
3	3	$20
4	2	$15

Capacity of the knapsack = 5.

OR

Q2) a) What is Job scheduling algorithm? How job scheduling algorithm can be solved using Greedy algorithmic approach? Explain your answer with respect to Principle, control abstraction, time analysis of control abstraction, of greedy approach for the following instance of Knapsack problem. **[12]**

Each job is associated with a deadline and profit.

Job	J_1	J_2	J_3	J_4	J_5
Deadline	2	1	3	2	1
Profit	60	100	20	40	20

b) Write steps for Greedy approach for Job sequencing. **[6]**

P.T.O.

Q3) a) What is branch and bound algorithmic strategy? Apply branch n bound algorithmic strategy to solve traveling salesman problem for **[9]**

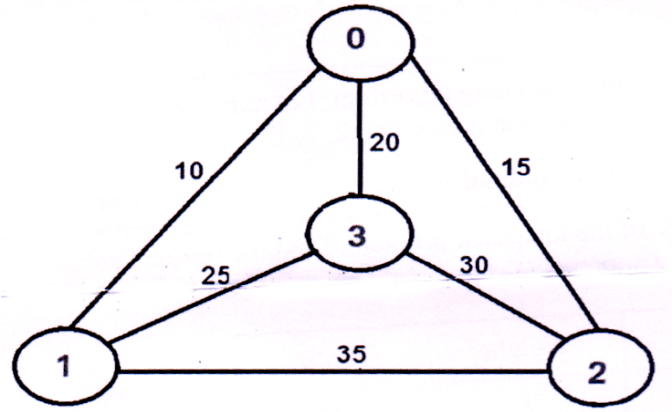

b) Explain with suitable example Backtracking: Principle, control abstraction, time analysis of control abstraction. **[8]**

OR

Q4) a) Explain the 'branch and bound' approach for solving problems. Write a branch and bound algorithm for solving the 0/1 Knapsack problem. Use the same algorithm to solve the following 0/1 Knapsack problem. The capacity of the knapsack is 15 kg. **[9]**

Item	A	B	C	D
Profit(Rs.)	18	10	12	10
Weight (Kg.)	9	4	6	2

b) What is sum of subset problem? Solve sum of subset problem for following instance using backtracking approach **[8]**

Input: set[ ] = {2, 3, 5, 6, 8, 10}, sum = 10

Q5) a) What is amortized analysis? Explain the aggregate method with example.**[9]**

b) What is Potential function method of amortized analysis? To illustrate Potential method, find amortized cost of PUSH, POP and MULTIPOP stack operations. **[9]**

OR

Q6) a) What are special needs of embedded algorithm? Which sorting algorithm is best for embedded systems? Why? **[6]**

b) Explain Randomized and Approximate algorithms. **[4]**

c) What is randomized algorithm? Give any example of randomized algorithm? Also explain Random variable, Binomial random variable and-Mathematics for Randomized algorithm. **[8]**

Q7) a) i) Explain an algorithm for Distributed Minimum Spanning Tree.

ii) Write and explain Rabin-Karp algorithm for string matching. **[10]**

b) With respect to Multithreaded Algorithms explain Analyzing multithreaded algorithms, Parallel loops, Race conditions. **[7]**

OR

Q8) a) Write and explain pseudo code for Multi-threaded merge sort algorithm. How parallel merging gives a significant parallelism advantage over Merge Sort? **[9]**

b) For string matching, working module q = 11, how many spurious hits does the Rabin- Karp matcher encounters in Text T = 31415926535.....**[8]**

i) T = 31415926535

ii) P=26

iii) Here T.Length = 11 so Q = 11

iv) And P mod Q = 26 mod 11 = 4

v) Now find the exact match of P mod Q...

Total No. of Questions : 8]

SEAT No. :

P-6552

[Total No. of Pages : 2

[6181]-102

B.E. (Computer Engineering)

MACHINE LEARNING

(2019 Pattern) (Semester - VII) (410242)

Time : 2½ Hours] *[Max. Marks : 70*

Instructions to the candidates:

1) ***Answer Q1 or Q2, Q3 or Q4, Q5 or Q6, Q7 or Q8.***
2) ***Neat diagrams must be drawn wherever necessary.***
3) ***Figures to the right side indicate full marks.***
4) ***Assume suitable data if necessary.***

Q1) a) Differentiate between overfitting and underfitting. **[6]**

b) The table below shows the number of grams of carbohydrates, X and the number of Calories, Y of six different foods. Find linear regression equation for this dataset. **[8]**

Carbohydrates (X)	8	9.5	10	6	7	4
Calories (Y)	12	138	147	88	108	62

Also find the value of Y for X = 12

c) Explain Bias Variance Trade off. **[4]**

OR

Q2) a) What is Linear Regression? Explain the concept of Ridge regression. **[9]**

b) Explain the following Evaluation Metrics : **[9]**

i) MAE

ii) RMSE

iii) R2

Q3) a) Differentiate between bagging and boosting. **[4]**

b) What is ensemble learning? Explain the concept of Random Forest ensemble learning. **[9]**

c) What is the relation between precision and recall? Explain with an example. **[4]**

P.T.O.

OR

Q4) a) What is K-fold cross-validation? In K-fold cross-validation, comment on the following situations **[9]**

i) When the value of K is too large

ii) When the value of K is too small.

How do you decide the value of k in k-fold cross-validation?

b) Explain i) Accuracy, ii) Precision, iii) Recall, and iv) F-Score **[8]**

Q5) a) Explain K-Means clustering in detail with a suitable example. **[8]**

b) What is outlier analysis? How is Local Outlier Factor detected? **[5]**

c) Explain Spectral Cluster in galgorithm. **[5]**

OR

Q6) a) Explain Hierarchical and Density-based Clustering approaches. **[9]**

b) Write short note on : **[9]**

i) Optimization of clusters

ii) K-Medoids

iii) Evaluation metrics

Q7) a) Write a note on Single Layer Neural Network. **[4]**

b) Explain Radial Basis Function networks in detail. **[8]**

c) Explain Recurrent Neural Networks and its applications in brief. **[5]**

OR

Q8) a) Explain the concept of Back Propagation in ANN with example. **[8]**

b) What is Functional Link Artificial Neural Network (FLANN)? Explain its merits over other ANNs. **[5]**

c) What is Activation Function? Explain with a suitable example. **[4]**

□□□

Total No. of Questions : 8]

SEAT No. :

P6553

[Total No. of Pages : 2

[6181]-103

B.E. (Computer Engineering)

BLOCKCHAIN TECHNOLOGY

(2019 Pattern) (Semester - VII) (End Semester) (Elective) (410243)

Time : 2½ Hours] *[Max. Marks : 70*

Instructions to the candidates:

1) ***Attempt Q1 or Q2, Q3 or Q4, Q5 or Q6, Q7 or Q8.***
2) ***Figures to the right side indicate full marks.***
3) ***Neat diagram must be drawn wherever necessary***
4) ***Assume suitable data if necessary***

Q1) a) Explain any two **[6]**

i) R3

ii) Ethereum

iii) Hyperledger

iv) Corda

b) Explain Proof of work with example. **[6]**

c) What is Byzantine General Problem? Explain its significance. **[6]**

OR

Q2) a) Explain any two Blockchain platforms. **[6]**

i) Public

ii) Private

iii) Consortium

b) Explain proof of stake with example. **[6]**

c) What is consensus in Blockchain? **[6]**

Q3) a) Discuss the concept of Cryptowallets? **[6]**

b) Discuss types of cryptocurrency? **[6]**

c) What is Metamask? **[5]**

OR

P.T.O.

Q4) a) Compare Coinbase and Binanace. **[6]**

b) What is the relevance of Crypto Usage. Discuss with example. **[6]**

c) What is bitcoin? Explain in detail. **[5]**

Q5) a) What is ethereum? What are the types of ethereum? **[6]**

b) Explain SWARM (Decentralized storage platform) in detail. **[6]**

c) What is the concept of smart contact? Discuss its types. **[6]**

OR

Q6) a) What is the significance of EVM(Ethereum Virtual Machine) **[6]**

b) Explain Whisper(Decentralized Messaging platform) **[6]**

c) Discuss how smart contracts are implemented using solidity. **[6]**

Q7) a) Discuss any use case of Blockchain integration with any other domain like cloud. **[6]**

b) Explain use of Blockchain in Energy and utilities. **[6]**

c) Explain use of Blockchain in health sector. **[5]**

OR

Q8) a) Discuss any use case of Blockchain integration with any other domain like Internet of things etc. **[6]**

b) What is the significance of adaption of Blockchain in banking and financial services. **[6]**

c) Explain any one application of Blockchain in Government sector. **[5]**



Total No. of Questions : 8]

SEAT No. :

P-6554

[Total No. of Pages : 2

[6181]-104

B.E. (Computer Engineering)

PERVASIVE COMPUTING

(2019 Pattern) (Semester - VII) (410244A) (Elective - III)

Time : 2½ Hours] *[Max. Marks : 70*

Instructions to the candidates:

1) ***Answer Q.1 or Q.2, Q.3 or Q.4, Q.5 or Q.6, Q.7 or Q.8.***
2) ***Neat diagrams must be drawn wherever necessary.***
3) ***Figures to the right indicate full marks.***

Q1) a) Explain general architecture for context aware systems. **[9]**

b) Write note on w. r.t Mobility Awareness. **[8]**

i) Call Routing for Mobile Users

ii) Mobile Phone Location Determination

OR

Q2) a) Explain context aware computing and types of contexts with examples. **[9]**

b) Write short note on ICT System Awareness. **[8]**

Q3) a) What are intelligent systems? State and explain different types of Environment for Intelligent Systems. **[9]**

b) Describe the working of Semantic Knowledge Based Information System (KBIS). **[5]**

c) Explain the term in short : **[4]**

i) Classical Logic intelligent systems.

ii) Soft Computing IS Models

OR

P.T.O.

Q4) a) Draw and explain Environment Model-based Intelligent Systems Architectures. **[9]**

b) Define Interaction Multiplicity. State and explain different type of Interaction Multiplicity. **[5]**

c) State different Generic Intelligent Interaction Application. **[4]**

Q5) a) What do you mean by interaction design? Discuss the need w.r.t to pervasive environment. **[9]**

b) Define HCI. Explain explicit and implicit HCI. **[8]**

OR

Q6) a) Draw and explain HCI architecture with its important elements. **[9]**

b) Write differences between Interaction Design and UX. **[8]**

Q7) a) Discuss Pervasive computing security challenges & its requirements. **[9]**

b) Which is different Role of Ethics in pervasive computing security? Explain. **[9]**

OR

Q8) a) Explain different Open Issues of security in pervasive computing. **[9]**

b) Explain secure resource discovery in detail. **[9]**

⌘⌘⌘

Total No. of Questions : 8]

SEAT No. :

P-6555

[Total No. of Pages : 2

[6181]-105

B.E. (Computer Engineering)

MULTIMEDIA TECHNIQUES

(2019 Pattern) (Semester - VII) (410244B) (Elective - III)

Time : 2½ Hours] *[Max. Marks : 70*

Instructions to the candidates:

1) ***Answer Q1 or Q2, Q3 or Q4, Q5 or Q6, Q7 or Q8.***
2) ***Neat diagrams must be drawn wherever necessary.***
3) ***Figures to the right indicate full marks.***
4) ***Assume suitable data if necessary.***

Q1) a) Explain a typical electronic signal for one scan line of NTSC Composite Video with diagram. **[5]**

b) Write Short Note on : **[6]**

- PCM
- DPCM
- DM

c) What are 3 different interfaces for analog video signal transmission? Explain any in detail. **[6]**

OR

Q2) a) Explain PAL video and SECAM video in detail. **[5]**

b) Explain DPCM encoder & decoder in detail with diagram. **[6]**

c) Write Short Note on : **[6]**

- Analog Video
- Digital Video

Q3) a) What is Compression? Explain any 1 compression algorithm in detail. **[5]**

b) What is JPEG Standard? Explain JPEG 2000 Std. in detail. **[6]**

c) Write Short Note on : **[6]**

- MPEG 4
- MPEG 7

P.T.O.

OR

Q4) a) What is Quantization? Explain in detail. **[5]**

b) Explain Rate distortion theory in detail. **[6]**

c) Explain wavelet based coding in detail. **[6]**

Q5) a) Discuss AR, VR and MR in detail. **[6]**

b) Explain the importance of immersive experiences for designing academic application which serve communication between educator, researchers and students. **[6]**

c) Explain applications of Virtual Environment. **[6]**

OR

Q6) a) What are the benefits & components of Head mounted VR display, an output devices of VR. **[6]**

b) What is difference between VR and AR in detail. **[6]**

c) What are the challenges, applications & future potential of AR display? **[6]**

Q7) a) Draw & explain the layers available in IoT. **[6]**

b) What are the applications of M-IoT? Explain how it can be used in Health Monitoring. **[6]**

c) Write Short Note on : Big data layered M-IoT architecture. **[6]**

OR

Q8) a) Explain road management system with the help of use case for lane and path hole detection. **[6]**

b) Explain AI based SDN architecture with layers. **[6]**

c) Explain layered M-IoT architecture in detail. **[6]**



Total No. of Questions : 8]

SEAT No. :

P-6556

[Total No. of Pages : 2

[6181]-106

B.E. (Computer Engineering)

CYBER SECURITY AND DIGITAL FORENSICS

(2019 Pattern) (Semester - VII) (410244 C) (Elective - III)

Time : 2½ Hours] *[Max. Marks : 70*

Instructions to the candidates :

1) ***Answer Q.1 or Q.2, Q.3 or Q.4, Q.5 or Q.6, Q.7 or Q.8.***
2) ***Neat diagrams must be drawn wherever necessary.***
3) ***Figures to the right indicate full marks.***
4) ***Assume suitable data, if necessary.***

Q1) a) What are the typical steps followed by computer forensics specialists in an investigation? Explain any 2 in detail. **[9]**

b) In what ways can business benefit from computer forensics technology? Explain in detail. **[9]**

OR

Q2) a) What kind of digital evidences can be collected in computer forensics? Explain in detail. **[9]**

b) Why is data backup & recovery important in computer forensics? **[9]**

Q3) a) What is the primary purpose of collecting evidence in digital forensics? Explain in detail. **[9]**

b) What are the typical steps involved in the collection of digital evidences? **[8]**

OR

Q4) a) Explain the different types of digital evidence that can be collected in computer forensics? **[8]**

b) What method & techniques are commonly used to verify & authenticate computer images. explain any two in detail? **[9]**

P.T.O.

Q5) a) How do investigators determine which data is relevant to collect & analyze in digital forensics investigation? **[8]**

b) What is the honeynet project, how does it contribute to network forensics? **[9]**

OR

Q6) a) Why is data validation crucial in digital forensics & what methods are commelily used for data validation? **[8]**

b) Describe the process of seizing digital evidence at a crime or incident scene? **[9]**

Q7) a) How does email play a significant role in digital investigations? What types of information can be obtain from email Header that may be relevant in investigations? **[9]**

b) What factors should be considered when evaluating computer forensics tool needs for an investigations. Explain any two in detail? **[9]**

OR

Q8) a) What is function e-mail server, how does it store & manage e-mail data? **[9]**

b) Write short note (any one) : **[9]**

i) e-mail forensics tools.

ii) Computer forensics hardware tools

▽▽▽▽

Total No. of Questions : 8]

SEAT No. : ____

P-6557

[Total No. of Pages : 2

[6181]-107
B.E. (Computer Engineering)
OBJECT ORIENTED MODELING & DESIGN
(2019 Pattern) (Semester-VII) (Elective - III) (410244D)

Time : 2½ Hours] ***[Max. Marks : 70***

Instructions to the candidates :

1) ***Answer Q.1 or Q.2, Q.3 or Q.4, Q.5 or Q.6, Q.7 or Q.8.***
2) ***Neat diagrams must be drawn wherever necessary.***
3) ***Figures to the right indicate full marks.***
4) ***Assume suitable data, if necessary.***

Q1) a) State the relationship between class and state model. **[5]**

b) Draw a detailed sequence diagram for Online Shopping. **[5]**

c) What do you mean by activity? How do activities, branches and Concurrent activities are represented. Prepare an activity diagram that elaborates the details of Logging into an email system. **[8]**

OR

Q2) a) What are composite states ? Describe categories of composite states. **[5]**

b) Draw Activity diagram for Hospital Management System. **[5]**

c) Explain the following terms with respect to use case model with notation: **[8]**

i) Use case ii) Actor

iii) System boundry iv) Include

Q3) a) Write a short note on: System performance estimation. **[5]**

b) Explain in brief Global resource handling. **[5]**

c) Enlist architectural styles. Explain any Four in detail. **[7]**

OR

Q4) a) What are the different caregories of external control strategies ? Explain in brief. **[5]**

b) Define Reuse plan. Explain following term with respect to reuse plan: **[5]**

i) Framework ii) Pattern

c) What is meant by sub system in system design? How we can organize system into subsystems ? Explain in detail. **[7]**

P.T.O.

Q5) a) Draw a class model by using Fine tuning Generalization and Realizing associations. **[5]**

b) What are the steps to design algorithms? Explain in detail. **[5]**

c) Define Reverse engineering. What are inputs provided to reverse engineering? What are the outputs from reverse engineering? **[7]**

OR

Q6) a) Write short note on : **[5]**

i) Steps involved in organizing Class Design

ii) Refactoring

b) What are the steps involves in implementation modeling? Explain in detail. **[5]**

c) Write short note on: **[7]**

i) Wrapping ii) Maintenance

Q7) a) Explain about Client-Dispatcher-Server design pattern. **[5]**

b) Explain different Elements of Design Patterns. **[5]**

c) Show and explain relationships between patterns. **[8]**

OR

Q8) a) What is Pattern? Discuss pattern categories in detail. **[5]**

b) Discuss structure and variants of the Publisher-Subscriber design pattern. **[5]**

c) Define Idioms. What can Idioms provide? Where to find Idioms? **[8]**



Total No. of Questions : 8]

SEAT No. :

P-6558

[Total No. of Pages : 2

[6181]-108

B.E. (Computer Engineering)

DIGITAL SIGNAL PROCESSING

(2019 Pattern) (Semester - VII) (Elective - III) (410244E)

Time : 2½ Hours] *[Max. Marks : 70*

Instructions to the candidates:

1) ***Solve Q.1 or Q.2, Q.3 or Q.4, Q.5 or Q.6, Q.7 or Q.8.***
2) ***Assume suitable data if necessary.***
3) ***Neat diagrams must be drawn wherever necessary.***
4) ***Figures to the right indicates full marks.***

Q1) a) Derive the relationship between ZT & FT. **[5]**

b) Using residue method. Obtain inverse Z-transform from **[5]**

$$X(Z)=\frac{1}{(z-1)(z-3)}$$

c) Draw a signal flow diagram for 8-point DFT using Decimation in, frequency FFT algorithm. Obtain its computational complexity. **[8]**

OR

Q2) a) Draw a pole zero plot for a system described by **[5]**

$y(n) = x(n) - x(n-1) + 3y(n-1) - 2y(n-2)$

b) State and prove Time Reversal property of Z- Transform. **[5]**

c) Why Z- transform need to be specified only with ROC? what are the all-possible ROCs for finite and infinite duration sequences? **[8]**

Q3) a) Find the magnitude response and impulse response of a system described by the difference equation. **[10]**

$$y(n)-\frac{1}{2}y(n-1)=x(n)-\frac{1}{4}x(n-1)$$

P.T.O.

b) Define Unilateral Z -transform. What are the different characteristics of it? State Time Delay & time Advance property of unilateral Z -transform. **[7]**

OR

Q4) a) Explain the method of simple geometric construction to obtain the phase& Frequency response of DT system given by **[10]**

$y(n)= 2x(n) + x(n - 1)$

b) Write a short note on Stability & Causality of Linear Time Invariant system. **[7]**

Q5) a) Write a short note on ideal filter & approximation. State the advantages & disadvantages of Digital filter. **[8]**

b) What are the two different methods to Design FIR filter? Explain design steps of each method. **[10]**

OR

Q6) a) Write a short note on Commonly used Windows and their functions to design the filter. **[8]**

b) What is the Principle of Impulse Invariant method? Explain the mapping between S-plane to Z- Plane for Impulse Invariant method. Explain transformation of analog filter into a stable digital filter using this method. **[10]**

Q7) a) What is Open Multimedia Application Platform (OMAP)? How can a student use an OMAP platform? **[8]**

b) Explain Direct Form filter structure and compare with Cascade form filter structure & computational complexity. **[9]**

OR

Q8) a) Explain the structure for Linear Phase FIR filter for even and odd samples. **[8]**

b) Explain the features of ADSP 2IXX processor. What is the use of DAG I & DAG 2? How different index registers are used in DAG 1 & DAG2. **[9]**

Total No. of Questions : 8]

SEAT No. :

P-6559

[Total No. of Pages : 2

[6181]-109

Fourth Year B.E. (Computer Engineering)

INFORMATION RETRIEVAL

(2019 Pattern) (Semester - VII) (410245 A) (Elective - IV)

Time : 2½ Hours] *[Max. Marks : 70*

Instructions to the candidates :

1) ***Solve Q.1 or Q.2 and Q.3 or Q.4 and Q.5 or Q.6 and Q.7 or Q.8.***
2) ***Figures to the right indicate full marks.***
3) ***Neat diagram must be drawn whenever necessary.***
4) ***Assume suitable data if necessary.***

Q1) a) What is Data Compression? Explain Modeling and Coding. **[9]**

b) Write a short note on : **[9]**

i) Invalidation List

ii) Garbage Collection

iii) Document Modifications

OR

Q2) a) Write a short note on : **[9]**

i) Decoding Performance

ii) Document Reordering

iii) Arithmetic Coding

b) Differentiate between Contiguous Inverted Lists & Noncontiguous Inverted. **[5]**

c) Differentiate between Non parametric Gap Compression & Parametric Gap Compression. **[4]**

Q3) a) Explain Categorization and Filtering with any two detailed Examples of each. **[8]**

b) Write a short note on Generalized Linear Models. **[9]**

OR

P.T.O.

Q4) a) Explain Probabilistic Classifiers, Information-Theoretic Model in detail. **[9]**

b) Describe Language Models and Smoothing. **[8]**

Q5) a) Explain Traditional effectiveness measure and The Text Retrieval Conference (TREC) with suitable examples. **[9]**

b) Write a short note on : **[9]**

i) Nontraditional effectiveness measures

ii) Measuring efficiency

OR

Q6) a) What is Scheduling and Caching in Measuring Efficiency?. Explain in detail. **[9]**

b) Write a short note on : **[9]**

i) Using statistics in evaluation

ii) Minimizing adjudication Effort

Q7) a) Explain in detail Parallel Query Processing with suitable examples. **[9]**

b) Write a short note on : **[8]**

i) Static ranking

ii) Dynamic ranking

OR

Q8) a) Describe MapReduce with suitable examples. **[9]**

b) Write a short note on : **[8]**

i) Evaluation web search

ii) Web Crawlers

▽▽▽▽

Total No. of Questions : 8]

SEAT No. :

P-6560

[Total No. of Pages : 2

[6181]-110
B.E. (Computer Engineering)
GPU PROGRAMMING AND ARCHITECTURE
(2019 Pattern) (Semester-VII) (410245 B) (Elective-IV)

Time : 2½ Hours] ***[Max. Marks : 70***

Instructions to the candidates :

1) ***Solve Q.1 or Q.2, Q.3 or Q.4, Q.5 or Q.6, Q.7 or Q.8.***
2) ***Figures to the right indicate full marks.***
3) ***Draw neat diagrams if necessary.***
4) ***Assume suitable data, if necessary.***

Q1) a) How CUDA error handling APIS can be used for error checking. **[9]**

b) Describe parallel programming issues in detail. **[9]**

OR

Q2) a) Explain defensive programming and assertions techniques. **[9]**

b) Explain different CUDA error checking tools. **[9]**

Q3) a) Explain pipe memory object? **[9]**

b) Explain OPENCL architecture. **[8]**

OR

Q4) a) Explain Kernel programming Model. **[9]**

b) Explain various OPENCL components. **[8]**

Q5) a) What is MPI? Explain MPI communication. **[9]**

b) Differentiate task and data parallelism. **[9]**

OR

P.T.O.

Q6) a) Explain convolution parallel algorithm. **[9]**

b) Write a short note on CSR format for space matrix. **[9]**

Q7) a) Write a short note on "Efficient Neural Network training and inferencing". **[9]**

b) Explain OPENCL application design process. **[8]**

OR

Q8) a) Explain how you can design a OPENCL application with example. **[9]**

b) How OPENCL helps in heterogeneous computing. **[8]**



Total No. of Questions : 8]

SEAT No. : ____

P-6561

[Total No. of Pages : 2

[6181]-111

B.E. (Computer Engineering)

MOBILE COMPUTING

(2019 Pattern) (Semester - VII) (410245C) (Elective - IV)

Time : 2½ Hours] ***[Max. Marks : 70***

Instructions to the candidates:

1) ***Solve Q.1 or Q.2, Q.3 or Q.4 Q.5 or Q.6, Q.7 or Q.8.***
2) ***Figures to the right indicate full marks.***
3) ***Assumme suitable data if necessary.***
4) ***Neat diagrams must be drawn wherever necessary.***

Q1) a) Explain the network and switching Sub-System of GSM architecture. **[5]**

b) Compare various IEEE 802.11 x standards. **[5]**

c) Explain UMTS architecture in detail. **[7]**

OR

Q2) a) Explain different architectures of WLAN. **[5]**

b) Explain the Um interface of GSM. **[5]**

c) Explain using block diagram the process of authentication in a GSM Service. **[7]**

Q3) a) Explain difference between Hard and Soft Handoff. **[5]**

b) Explain the Cell dragging in detail. **[5]**

c) Explain the process of call origination and call termination in GSM. **[7]**

OR

Q4) a) Explain mobility management with neat diagram. **[5]**

b) Define Handover. List and explain the types of handover. **[5]**

c) Explain GSM interfaces and GSM protocol architecture. **[7]**

P.T.O.

Q5) a) Describe data transfer from a mobile node to a fixed node and vice versa. **[6]**

b) Explain agent advertisement and discovery registration in mobile network. **[6]**

c) Why and how can optimization in mobile IP be achieved? **[6]**

OR

Q6) a) How is packet delivery achieved to and from mobile node. **[5]**

b) Discuss how tunneling works for mobile IP using IP_in_IP encapsulation. **[5]**

c) Describe DSDV and DSR routing algorithms for ad hoc network. **[8]**

Q7) a) Write short note on VoLGA architecture. **[5]**

b) Explain evolution from UMTS to LTE. **[5]**

c) Explain 3G and 4G technologies for GSM and CDMA. **[8]**

OR

Q8) a) Explain SAE architecture in detail. **[6]**

b) What is HSPA? Explain in detail. **[6]**

c) Explain the 4G LTE technologies with a neat diagram. **[6]**

⌘⌘⌘

Total No. of Questions : 8]

SEAT No. :

P-6562

[Total No. of Pages : 2

[6181]-112

B.E. (Computer)

SOFTWARE TESTING AND QUALITY ASSURANCE

(2019 Pattern) (Semester - VII) (410245D) (Elective - IV)

Time : 2½ Hours] ***[Max. Marks : 70***

Instructions to the candidates:

1) ***Answer Q1 or Q2, Q3 or Q4, Q5 or Q6, Q7 or Q8.***
2) ***Neat diagrams must be drawn wherever necessary.***
3) ***Figures to the right side indicate full marks.***
4) ***Assume suitable data if necessary.***

Q1) a) Identify how the different Static Test Case Design Techniques are useful for Software Testing? **[6]**

b) Interpret the different Dynamic Test Design Techniques. **[6]**

c) What do you think about static techniques. **[6]**

OR

Q2) a) Can you illustrate Adhoc Testing with example. **[6]**

b) How would you explain unit Testing and Integration Testing? **[6]**

c) State in your own words why Regression Testing in important? **[6]**

Q3) a) Illustrate different characteristics of software in detail. **[6]**

b) Identify different steps involved in Software Development Process. **[6]**

c) Can you clarify different levels of CMM. **[5]**

OR

Q4) a) Why Software has Defects? Explain in details. **[6]**

b) Can you distinguish between Q.A. and Q.C. **[6]**

c) Explain in detail Pillars of Quality Management System. **[5]**

P.T.O.

Q5) a) How to choose an Automation tool? Explain in briefly. **[6]**

b) Illustrate selenium Tool suite in detail. **[6]**

c) How would you explain Robotic Process Automation (RPA). **[6]**

OR

Q6) a) Construct different automated testing process. **[6]**

b) What is selenium RC? Explain in detail. **[6]**

c) What do you understand selenium grid? Explain it. **[6]**

Q7) a) Can you illustrate Total Quality Management. Explain in detail. **[6]**

b) Illustrate Ishikawals 7 basic Tools in detail. **[6]**

c) What do you understand by software maintenance? Explain in detail. **[5]**

OR

Q8) a) Can you Clarify Flow Chart. Run charts, control charts. **[6]**

b) What are the facts to achieving the software quality. Explain in detail. **[6]**

c) What are the different task goal and metric in SQA? **[5]**

Total No. of Questions : 8]

SEAT No. :

P-6563

[Total No. of Pages : 2

[6181]-113

B.E. (Computer Engineering)

COMPILERS

(2019 Pattern) (Semester - VII) (410245 E) (Elective - IV)

Time : 2½ Hours] ***[Max. Marks : 70***

Instructions to the candidates :

1) ***Answer to the questions (Q. No. 1 or Q. No. 2, Q. No. 3 or Q. No. 4, Q. No. 5 or Q. No. 6, Q. No. 7 or Q. No. 8).***
2) ***Assume suitable data, if necessary.***
3) ***Draw neat labelled diagram wherever necessary.***
4) ***Figures to the right indicate full marks.***

Q1) a) What do you mean by Synthesized and Inherited attributes? Illustrate S-attributed SDT and L-attributed SDT. **[9]**

b) Write quadruple, triples and indirect triples for following expression $(x + y) * (y + z) + (x + y + z)$. **[9]**

OR

Q2) a) What is Syntax Directed Translation (SDT)? Write SDT rules for following grammar: **[9]**

E - > E+T | T

T - > T*F | F

F - > INTLIT

Write Syntax Directed Translation for following grammar :

S → id : = E

E → E1 + E2

E → E1* E2

E → - E1

E → (E1)

E → id

b) Draw the diagram of showing position of intermediate code generator. Write the benefits of machine independent intermediate code. Draw syntax tree and DAG for following expression: **[9]**

a : = b* – c + b* – c.

P.T.O.

Q3) a) Explain in detail about Run Time Storage Allocation. **[8]**

b) Illustrate with a suitable example, the mechanism used by a compiler to handle procedure parameters. **[9]**

OR

Q4) a) What is an activation record? Describe each of its fields with suitable diagram. **[8]**

b) Illustrate following allocation strategies : **[9]**

i) Static

ii) Stack

iii) Heap

Q5) a) What are basic blocks? Discuss an algorithm to partition the blocks. **[8]**

b) Illustrate issues in code generation. Give example wherever necessary. **[9]**

OR

Q6) a) Illustrate Structure - preserving transformations with examples. **[8]**

b) What is peephole optimization? Illustrate characteristics of it with suitable examples. **[9]**

Q7) a) Discuss the factors which affect code optimization. **[9]**

b) Consider the following basic block. Draw the stepwise DAG representation of the block. **[9]**

temp1 : = 2 * j

temp2 : = x [temp 1]

temp3 : = 2 * j

temp4 : = y [temp3]

temp5 : = temp2 + temp4

i : = temp5

OR

Q8) a) Illustrate following data flow properties with example & advantages: **[9]**

i) Available Expressions

ii) Reaching Definitions

iii) Live Variable

b) Explain live variable analysis (liveliness) algorithm. **[9]**

▽▽▽▽

Total No. of Questions : 8]

SEAT No. :

P6564

[Total No. of Pages : 2

[6181]-114

B.E. (Computer Engineering)

HIGH PERFORMANCE COMPUTING

(2019 Pattern) (Semester - VIII) (410250)

Time : 2½ Hours] *[Max. Marks : 70*

Instructions to the candidates:

1) ***Answer Q1 or Q2, Q3 or Q4, Q5 or Q6, Q7 or Q8.***
2) ***Neat diagrams must be drawn wherever necessary.***
3) ***Figures to the right side indicate full marks.***

Q1) a) Explain circular shift operation on hypercube network? **[6]**

b) Explain term of all-to-all broadcast on linear array, Mesh & Hypercube topologies? **[6]**

c) Explain all-to-all personalized communication algorithm on a three-dimensional hypercube? **[5]**

OR

Q2) a) Explain scatter and gather operations? **[6]**

b) Compute prefix sums on an eight-node hypercube network? **[6]**

c) Explain One-to-all broadcast on a 16-node mesh network? **[5]**

Q3) a) Explain following performance Metrics for Parallel Systems : **[6]**

i) Execution time

ii) Total parallel over head

iii) Speedup

b) Explain amdahl's and gustafson's law? **[6]**

c) Comment on "Scalability of Parallel Systems" **[5]**

OR

P.T.O.

Q4) a) Find Minimum execution time and Minimum cost-optimal execution time for adding n numbers? **[6]**

b) Explain adding n numbers cost-optimally with example? **[6]**

c) What do you mean by Asymptotic Analysis of Parallel Programs? **[5]**

Q5) a) Describe CUDA communication and synchronization along with CUDAC functions? **[8]**

b) Design a simple CUDA kernel function to multiply two integers? **[6]**

c) Explain Grid, Block and Thread in CUDA with diagram? **[4]**

OR

Q6) a) Write a CUDA kernel to add addition of two vectors using threads and explain the process? **[8]**

b) Explain cuda memory model in brief ? **[6]**

c) Write advantages and limitations of cuda? **[4]**

Q7) a) Compare an algorithm for sequential and parallel Merge sort. Analyze the complexity for the same? **[8]**

b) Modify BFS for parallel execution & analyze its complexity? **[6]**

c) Write short note on parallel computing for AI/ML? **[4]**

OR

Q8) a) Compare an algorithm for sequential and parallel buble sort. Analyze the complexity for the same? **[8]**

b) Explain Parallel Depth First Search algorithm in detail? **[6]**

c) What is Kubernetes framework? **[4]**



Total No. of Questions : 8]

SEAT No. : ____

P6565

[Total No. of Pages : 2

[6181]-115
B.E. (Computer Engineering)
DEEP LEARNING
(2019 Pattern) (Semester - VIII) (410251)

Time : 2½ Hours] ***[Max. Marks : 70***

Instructions to the candidates:

1) ***Solve Q.1 or Q.2, Q.3 or Q.4, Q.5 or Q.6, Q.7 or Q.8.***
2) ***Figures to the right indicate full marks.***
3) ***Neat diagrams must be drawn wherever necessary.***
4) ***Make suitable assumption whenever necessary.***

Q1) a) Explain stride Convolution with example. **[6]**

b) Explain Padding and its types. **[6]**

c) Explain Local response normalization and need of it. **[6]**

OR

Q2) a) Explain ReLU Layer and its advantages. **[6]**

b) Explain Pooling layers and its types with examples. **[6]**

c) What are the applications of Convolution with examples? **[6]**

Q3) a) Draw CNN architecture and explain its working. **[6]**

b) Explain the types of Recurrent Neural Network. **[6]**

c) Justify RNN is better suited to treat sequential data than a feed forward neural network. **[5]**

OR

P.T.O.

Q4) a) Explain Recurrent Neural Network with its architecture. **[6]**

b) Draw and explain architecture for Long Short-Term Memory (LSTM). **[6]**

c) Explain how the memory cell in the LSTM is implemented computationally? **[5]**

Q5) a) Explain Deep generative model with example. **[6]**

b) How does GAN training scale with batch size? **[6]**

c) List the applications of GAN network with description. **[6]**

OR

Q6) a) Draw and explain architecture of Boltzmann machine. **[6]**

b) Explain different types of GAN. **[6]**

c) Explain Deep Belief Network with diagram. **[6]**

Q7) a) Explain dynamic programming algorithms for reinforcement learning. **[6]**

b) What is deep reinforcement learning? Explain in detail. **[6]**

c) Explain Simple reinforcement learning for Tic-Tac-Toe. **[5]**

OR

Q8) a) Explain Markov decision process. **[6]**

b) Write Short Note on Q Learning and Deep Q-Networks. **[6]**

c) What are the challenges of reinforcement learning? Explain any four in detail. **[5]**

Total No. of Questions : 8]

SEAT No. :

P6566

[Total No. of Pages : 2

[6181]-116
B.E. (Computer Engineering)
NATURAL LANGUAGE PROCESSING
(2019 Pattern) (Semester - VIII) (410252A) (Elective - V)

Time : 2½ Hours] *[Max. Marks : 70*

Instructions to the candidates:

1) ***All questions are compulsory.***
2) ***Figures to the right indicate full marks.***

Q1) a) What are generative models of language? Explain any one model in detail. **[4]**

b) Consider the following small corpus: **[8]**

Training corpus:

<s> I am from Pune </s>

<s> I am a teacher </s>

<s> students are good and are from various cities </s>

<s> students from Pune do engineering </s>

Test data:

<s> students are from Pune </s>

Find the Bigram probability of the given test sentence.

c) Explain in detail Latent Semantic Analysis for topic modelling (LSA). **[6]**

OR

Q2) a) Write short note on BERT. **[4]**

b) Given a document-term matrix with the following counts: **[6]**

	Document 1	Document 2	Document 3
Term 1	10	5	0
Term 2	2	0	8
Term 3	1	3	6

Calculate the TF-IDF score of "Term 1" in "Document 1".

c) Describe the Latent Dirichlet Allocation (LDA) algorithm and how it is used for topic modeling? **[8]**

P.T.O.

Q3) a) Describe the concept of Information Retrieval. Explain the significance of Natural Language Processing in Information Retrieval. **[4]**

b) Explain reference resolution and conference resolution with example. **[8]**

c) What is Cross-Lingual information Retrieval, and how is it used in Natural Language Processing? Provide an example. **[6]**

OR

Q4) a) Explain the concept of the Vector Space Model, and describe how it is used in Information Retrieval. **[6]**

b) Describe entity extraction and relation extraction with the help of examples. **[8]**

c) What is Named Entity Recognition (NER)? Describe the various metrics used for evaluation. **[4]**

Q5) a) List the tools available for the development of NLP applications? Write the features of any 3 tools. **[7]**

b) Describe in detail the Lesk algorithm and Walker's algorithm for word sense disambiguation. **[10]**

OR

Q6) a) Explain the following lexical knowledge networks? **[10]**

i) WordNet

ii) Indo WordNet

iii) VerbNets

iv) PropBank

v) Treebanks

b) Write Python code using NLTK library to split the text into tokens using whitespace, punctuation-based and default tokenization methods. **[7]**

Q7) a) Explain three stages of Question Answering system with neat diagram. **[7]**

b) Explain Rule based Machine Translation and Statistical Machine Translation (SMT) with suitable diagrams and example. **[10]**

OR

Q8) a) Describe following NLP applications: **[10]**

i) Text Entailment

ii) Dialog and Conversational Agents

b) Explain Natural Language Generation with reference architecture. **[7]**

✪ ✪ ✪

Total No. of Questions : 8]

SEAT No. :

P6567

[Total No. of Pages :2

[6181] -117

B.E. (Computer Engineering)

IMAGE PROCESSING

(2019 Pattern) (Semester-VIII) (410252-B) (Elective-V)

Time : 2½ Hours] *[Max. Marks : 70*

Instructions to the candidates:

1) ***Answer Q1 or Q2, Q3 or Q4, Q5 or Q6, Q7 or Q8.***
2) ***Neat deagrams must be drawn wherever necessary.***
3) ***Figures to the right indicate full marks.***
4) ***Assume suitable data if necessary.***

Q1) a) Explain Image Segmentation with its application? **[6]**

b) Write short note on following. **[6]**

i) Point Detection

ii) Edge Detection

c) Explain Hough Transform with suitable example. **[6]**

OR

Q2) a) Explain Watershed Segmentation method in image segmentation. **[6]**

b) Explain Region Splitting and Region Merging method in region based segmentation. **[6]**

c) Write the short note on K-means clustering algorithm. **[6]**

Q3) a) For the image shown below, perform the Huffman coding algorithm. **[6]**

$$\begin{bmatrix} 3 & 3 & 3 & 2 \\ 2 & 3 & 3 & 3 \\ 3 & 2 & 2 & 2 \\ 2 & 1 & 1 & 0 \end{bmatrix}$$

b) What is the need for Image Compression? Explain in short Redundancy in image. **[6]**

c) Explain Run Length Encoding with example. **[6]**

OR

P.T.O.

Q4)	a)	Explain any two Object Recognition method.	**[6]**
	b)	Explain Wavelet based Image Compression technique.	**[6]**
	c)	Explain Arithmetic Coding Compression method with example.	**[6]**
Q5)	a)	Write short note on Gamma and Gaussian noise models.	**[6]**
	b)	Compare the Image Enhancement and Image Restoration.	**[6]**
	c)	Explain Wiener Filter used in Image Restoration.	**[5]**

OR

Q6)	a)	Explain Image degradation model with diagram.	**[6]**
	b)	Write short note on Blind Deconvolution technique.	**[6]**
	c)	Explain Image Restoration using Inverse filtering.	**[5]**
Q7)	a)	What are Medical Image Modalities?	**[6]**
	b)	Write a short note on Images from X rays and its application.	**[6]**
	c)	Explain Remote Sensing Process and it's any two advantages.	**[5]**

OR

Q8)	a)	Discuss workflow of Digital Photogrammetric Process.	**[6]**
	b)	Explain Coordinate System for Photogrammetry.	**[6]**
	c)	Write short note on Images from r rays.	**[5]**



Total No. of Questions: 8]

SEAT No. : ____

P6568

[Total No. of Pages :2

[6181]-118
B.E (Computer Engineering)
SOFTWARE DEFINED NETWORKS
(2019 Pattern) (Semester-VIII) (410252 (C)) (Elective-V)

Time : 2½ Hours] ***[Max. Marks : 70***

Instructions to the candidates:

1) ***Solve Q.1 or Q.2, Q.3 or Q.4, Q.5 or Q.6, Q.7 or Q.8.***
2) ***Figures to the right side indicate full marks.***
3) ***Neat diagram must be drawn wherever necessary.***
4) ***Assume suitable data jf necessary.***

Q1) a) Define data center with its need. **[6]**

b) Write a short note on VLANs. **[6]**

c) What are tunnelling technologies in Data Center Networks? **[6]**

OR

Q2) a) What are data center demands? **[6]**

b) Explain the following terms with respect to data center demands, Adding, Moving, Deleting, Failure recovery. **[6]**

c) Explain SDN Use Cases in Data Centre. **[6]**

Q3) a) Discuss SDN Programming concepts? **[6]**

b) Explain Northbound Programming Interface. **[6]**

c) What are Current Languages and Tools used in SDN? **[5]**

OR

Q4) a) Discuss Composition of SDN? **[6]**

b) Explain Case study: Ballarat Grammar uses SDN to fight malware. **[6]**

c) Enlist applications of SDN **[5]**

P.T.O.

Q5) a) Explain NVF(Network Function Virtualization) in detail. **[6]**

b) Distinguish between SDN Vs NVF. **[6]**

c) How NVF Works? Discuss in detail. **[6]**

OR

Q6) a) Explain NVF architecture in detail. **[6]**

b) What are the challenges of NVF? **[6]**

c) What is an in-line Network Function? **[6]**

Q7) a) Explain Juniper SDN Framework. **[6]**

b) What is IETF SDN Framework? **[6]**

c) Explain ODL (Open Daylight) architecture. **[5]**

OR

Q8) a) Write in brief about Floodlight Controller? **[6]**

b) What is Bandwidth Calendaring(BWC)? **[6]**

c) Discuss data center orchestration. **[5]**



Total No. of Questions: 8]

SEAT No. : ____

P6569

[Total No. of Pages :2

[6181]-119
B.E. (Computer Engineering)
ADVANCED DIGITAL SIGNAL PROCESSING
(2019 Pattern) (Semester-VIII) (410252D) (Theory) (Elective-V)

Time : 2½ Hours] ***[Max. Marks : 70***

Instructions to the candidates:

1) ***Solve Q.1 or Q.2, Q.3 or Q.4, Q.5 or Q.6, Q.7 or Q.8.***
2) ***Assume suitable data if necessary.***
3) ***Neat diagrams must be drawn wherever necessary.***
4) ***Figures to the right indicates full marks***

Q1) a) How sampling rate converted by rational factor I/D **[6]**

b) Describe the decimation process with a factor of 'D'. Obtain necessary expression, sketch frequency response. **[6]**

c) Describe ARMA lattice-ladder filters. **[5]**

OR

Q2) a) How polyphase filter structure is efficient for implementation of sampling rate conversion system. **[6]**

b) Determine the Fourier transform of the signal x(n) when it is: **[6]**

i) down sampled by factor D and

ii) up sampled by factor I.

c) What is multi rate signal processing? Explain any two applications of multi rate signal processing. **[5]**

Q3) a) Compare various non-parametric methods of power spectrum. **[6]**

b) Differentiate and compare Harr Wavelet and Daubechies Wavelet. **[6]**

c) Discuss applications of DCT and WT. **[6]**

OR

Q4) a) Discuss about computation of energy density spectrum. **[6]**

b) Elaborate on DCT and KL transform. **[6]**

c) What is Barlett's method for Periodogram. **[6]**

P.T.O.

Q5) a) Discuss harmonic coding and its application in speech processing. **[8]**

b) What is speaker verification? Why is it important? Justify with appropriate applications. How is it different from speaker identification? **[10]**

OR

Q6) a) Explain Vector Quantization based Coders for speech coding. **[8]**

b) What is the process for speech recognition and speech segmentation? Enlist the techniques and describe with suitable example. **[10]**

Q7) a) What is image enhancement? Why is it needed? Enlist and explain the image enhancement techniques. **[8]**

b) Enlist the different types of optimum linear filter. Discuss the applications of Wiener and Median filters in brief. **[9]**

OR

Q8) a) Write a short note on Edge Detection Process. **[8]**

b) Describe the use of Low pass, High pass and Bandpass filters for image smoothing and edge detection. **[9]**



Total No. of Questions : 8]

SEAT No. :

P6570

[Total No. of Pages : 2

[6181]-120
B.E. (Computer Engineering)
PATTERN RECOGNITION
(2019 Pattern) (Semester - VIII) (Elective - VI) (410253 (A))

Time : 2½ Hours] *[Max. Marks : 70*

Instructions to the candidates:

1) ***Answer Q.1 or Q.2, Q.3 or Q.4, Q.5 or Q.6, Q.7 or Q.8.***
2) ***Figures to the right side indicate full marks.***

Q1) a) Compare Decision Trees and Random Forests **[6]**

b) Explain in deatil Elements off normal grammars **[6]**

c) Write a note on Stochastic method:Boltzmann Learning **[5]**

OR

Q2) a) Analyze string generation in pattern recognition. **[6]**

b) Describe graph-based structural representation sin pattern recognition **[6]**

c) What are the applications of Stochastic method in pattern recognition? **[5]**

Q3) a) Explain K means algorithm with example. **[6]**

b) Explain minimum spanning tree with example. **[6]**

c) Write a note on agglomerative clustering algorithm. **[5]**

OR

Q4) a) Explain simulated annealing optimization in clustering. **[6]**

b) Describe Partition clustering in detail. **[6]**

c) Explain in detail the single linkage, complete linkage and average linkage algorithm. **[5]**

P.T.O.

Q5) a) What is Edit distance? Explain with example. **[6]**

b) Explain Bellman ford algorithm with example. **[6]**

c) Illustrate the Pearson correlation coefficient and the Spearman rank correlation coefficient. **[6]**

OR

Q6) a) What is dynamic time warping and how is it used in pattern recognition? **[6]**

b) What are the optimal path searching techniques in pattern recognition? **[6]**

c) Explain deformable template models in pattern recognition. **[6]**

Q7) a) What is fuzzy logic in pattern recognition and how is it used in classifiction? **[6]**

b) Define Pattern recognition. State various applications of pattern recognition. **[6]**

c) Explain in details Biometrics System. **[6]**

OR

Q8) a) Explain the steps involved in genetic algorithm for pattern classification. **[6]**

b) Write a note on Fuzzy pattern classifiers. **[6]**

c) Explain IRIS scanner and give its application. **[6]**

Total No. of Questions : 8]

SEAT No. :

P6571

[Total No. of Pages : 2

[6181]-121
B.E. (Computer Engineering)
SOFT COMPUTING
(2019 Pattern) (Semester -VIII) (Elective - VI) (410253 B)

Time : 2½ Hours] *[Max. Marks : 70*

Instructions to the candidates:

1) ***Answer Q.1 or Q.2, Q.3 or Q.4, Q.5 or Q.6, Q.7 or Q.8.***
2) ***Neat diagrams must be drawn wherever necessary.***
3) ***Assume suitable data if necessary.***

Q1) a) Explain Hill Climbing with a suitable diagram. **[6]**

b) Describe Evolutionary programming. **[6]**

c) Explain the artificial hummingbird algorithm. **[6]**

OR

Q2) a) Explain Simulated Annealing with a suitable diagram. **[6]**

b) Describe Genetic Programming. **[6]**

c) Differentiate between standard PSO and binary PSO. **[6]**

Q3) a) Describe any two fuzzy set operations. **[6]**

b) Explain Rank ordering method of Membership value Assignment. **[5]**

c) Describe applications of Fuzzy Logic Control System. **[6]**

OR

Q4) a) Describe any two properties of fuzzy sets. **[6]**

b) Explain Weighted Average Method of defuzzification. **[5]**

c) Explain System Architecture and Operation of Fuzzy Logic Control System. **[6]**

P.T.O.

Q5) a) Describe Encoding and Selection in Genetic Algorithm. **[6]**

b) Define the terms 'Individual' and 'Genes' in Genetic Algorithm. **[5]**

c) Design a solution to the Traveling Salesman Problem using Genetic Algorithm. **[6]**

OR

Q6) a) Describe Crossover (Recombination) and Mutation in Genetic Algorithm. **[6]**

b) Define the terms 'Fitness' and 'Populations' in Genetic Algorithm. **[5]**

c) Mention the advantages and limitations of Genetic Algorithms. **[6]**

Q7) a) Explain hybrid systems for speech and language processing. **[9]**

b) Describe Fuzzy sets and Genetic Algorithms in Game Playing. **[9]**

OR

Q8) a) Explain hybrid systems for decision making. **[9]**

b) Describe Soft Computing for Color Recipe Prediction. **[9]**

Total No. of Questions : 8]

SEAT No. :

P6572

[Total No. of Pages : 3

[6181]-122
B.E. (Computer Engineering)
BUSINESS INTELLIGENCE
(2019 Pattern) (Semester - VIII) (Elective - VI) (410253 (C))

Time : 2½ Hours] *[Max. Marks : 70*

Instructions to the candidates:

1) ***Answer Q.1 or Q.2 and Q.3 or Q.4 and Q.5 or Q.6 and Q.7 or Q.8.***
2) ***Neat diagram must be drawn wherever necessary.***
3) ***Figures to the right indicate full marks.***
4) ***Assume suitable data, if necessary.***

Q1) a) State different types of reports with their application. **[6]**

b) What are the best practices in dashboard design? **[6]**

c) State the difference between relational and multidimensional data model. **[6]**

OR

Q2) a) Suggest the use of Data Grouping & Sorting, Filtering Reports. **[6]**

b) What is a File Extension? Explain the structure of CSV file. **[6]**

c) Explain in detail Drill up and Drill Down. **[6]**

Q3) a) Compute Mean, Median and Mode for following data **[7]**

Class	10-15	15-20	20-25	25-30	30-35	35-40	40-45	45-50
Frequency	2	28	125	270	303	197	65	10

b) What is data Transformation? Explain Data Transformation Process in Detail. **[5]**

c) Explain univariate, bi variate and multivariate analysis with example and applications. **[5]**

OR

P.T.O.

Q4) a) What is a Contingency Table? What is Marginal Distribution? Justify with suitable example. **[7]**

b) Explain data validation, Incompleteness, noise, inconsistency of quality of input data. **[5]**

c) Explain following Data reduction technique: Sampling, Feature selection, Principal component analysis. **[5]**

Q5) a) Write a difference between classification and clustering with applications. **[6]**

b) Write a short note on Logistic Regression. **[6]**

c) The database has shown transactions. Let min_support = 02 and min_confidence = 70%. Find all frequent item set using Apriori algorithm and generate strong association rules **[6]**

TID	List of Items
T100	I1, I2, I5
T100	I2, I4
T100	I2, I3
T100	I1, I2, I4
T100	I1, I3
T100	I2, I3
T100	I1, I3
T100	I1, I2 ,I3, I5
T100	I1, I2, I3

OR

Q6) a) What are association rules? How to evaluate them using Support and Confidence? Explain with Example. **[6]**

b) State different formulae for Evaluation of classification models. **[6]**

c) Suppose we have group of visitors to the website using their age as following 16, 16, 17, 20, 20, 21, 21, 22, 23, 29, 36, 41, 42, 43, 44, 45, 61, 62, 66 Find out the clusters considering K = 2. **[6]**

Q7) a) State and explain different Tools for Business Intelligence. **[6]**

b) State and Elaborate similarities & differences in ERP and Business Intelligence. **[6]**

c) Write a note on: BI Applications in CRM. **[5]**

OR

Q8) a) State the role of Data Analytics in any business with example. **[6]**

b) Comment "How might you implement business intelligence findings within an organization?" **[6]**

c) Write a note on: BI Applications in Logistics. **[5]**

Total No. of Questions : 8]

SEAT No. :

P6573

[Total No. of Pages : 3

[6181]-123
B.E. (Computer Engineering)
QUANTUM COMPUTING
(2019 Pattern) (Semester - VIII) (Elective - VI) (410253 (D))

Time : 2½ Hours] *[Max. Marks : 70*

Instructions to the candidates:

1) ***Answer Q.1 or Q.2 and Q.3 or Q.4 and Q.5 or Q.6 and Q.7 or Q.8.***
2) ***Neat diagram must be drawn wherever necessary.***
3) ***Figures to the right indicate full marks.***
4) ***Use of Calculator is allowed.***
5) ***Assume suitable data if necessary.***

Q1) a) What is a single-qubit gate in quantum computing? Explain how it can be used to implement an arbitrary two-level unitary operation. **[6]**

b) What is a universal quantum gate set? How does the choice of universal quantum gate set affect the efficiency and accuracy of quantum algorithms? **[6]**

c) By using universal quantum gates, show that an arbitrary unitary matrix on a d-dimensional Hilbert space can be written as a product of two-level unitary matrices. **[6]**

OR

Q2) a) Explain how unitary matrix U can be decomposed into a product of two-level unitary matrices. Assume that the U acts on a d-dimensional Hibert space. $U = \begin{bmatrix} a & d & g \\ b & e & h \\ c & f & i \end{bmatrix}$ **[6]**

b) What is principle of deferred measurement, draw and explain Controlled-U operation and its equivalent in terms of circuit elements. **[6]**

c) Enlist and explain any three universal quantum gates, whichare used for the constructions of quantum computation. **[6]**

P.T.O.

Q3) a) Explain how the phase estimation procedure of the Fourier transform will play a key role in many quantum algorithms. **[6]**

b) Write short notes on **[6]**

i) Key elements of the guantum circuit model of computation

ii) Exponential complexity growth of quantum systems

c) The general applications of the quantum Fourier transform are

i) Period-finding

ii) Discrete logarithms

Write the input operation given to an algorithm and the output obtained from the above algorithms. **[5]**

OR

Q4) a) Is it possible to construct a quantum circuit using a universal set of quantum gates? Justify your answer. **[6]**

b) Draw the circuit diagram for the QFT, and explain how does it operate on a set of qubits? **[6]**

c) Define the following terms with their mathematical representation in the context of the simulation of quantum systems: **[5]**

i) Schrödinger's equation

ii) Poisson's equation

iii) Diffusion equation

Q5) a) While solving the period finding problem, What happens when the function is more complex? **[6]**

b) Explain how hidden subgroup problem can be solved using efficient quantum Fourier transform algorithm. **[6]**

c) Write the steps involved in the phase estimation algorithm for order-finding applications. **[6]**

OR

Q6) a) In the context of general applications of the quantum Fourier transform, explain the following terms: **[6]**

i) The hidden subgroup problem

ii) Discrete logarithms

b) Explain the limitations of Kitaev's phase estimation algorithm in order finding application. **[6]**

c) Write an algorithm for Quantum phase estimation and explain why is phase estimation interesting? **[6]**

Q7) a) Explain the text classification task using Grover's algorithm for quantum natural language processing (QNLP). **[6]**

b) What are the application domains for quantum machine learning? Explain any one application with the help of a special-purpose quantum device.**[6]**

c) Explain how quantum cryptography deals with the secure exchange of quantum information. **[5]**

OR

Q8) a) Define the QKD protocol. Explain the role of the QKD protocol in securing quantum key distribution. **[6]**

b) Draw and explain a feedforward quantum neural network with mixed quantum and classical components. **[6]**

c) Quantum information theory has led to advances in the field of machine learning. In this context, explain the following terms **[5]**

i) Adiabatic Quantum Computing

ii) Quantum Parallelism

Total No. of Questions : 8]

SEAT No. : ____

P-6574

[Total No. of Pages : 3

[6181]-125

B.E. (Electrical Engineering)

POWER SYSTEM OPERATION AND CONTROL

(2019 Pattern) (Semester - VII) (403141)

Time : 2½ Hours] ***[Max. Marks : 70***

Instructions to the candidates:

1) ***Solve Q.1 or Q.2; Q.3 or Q.4; Q.5 or Q.6; Q.7 or Q.8.***
2) ***Figures to the right indicate full marks.***
3) ***Neat diagrams must be drawn wherever necessary.***
4) ***Assume suitable additional data, if necessary.***
5) ***Use of a non-programmable calculator is allowed.***

Q1) a) Comment on : The necessity of automatic generation control. **[4]**

b) Explain following concepts **[6]**

i) Control area concept

ii) Area control error

c) Explain the working of the speed governor system of the turbo generator with a schematic diagram. **[8]**

OR

Q2) a) Draw the complete transfer function block diagram representing single are load frequency control including the speed governing model, turbine model and generator load model. **[4]**

b) Draw and explain the complete block diagram of proportional and integral load frequency control of an isolated power system. **[6]**

c) Explain the steady state analysis of single area load frequency control along with its block diagram and two cases: **[8]**

Case i) When the speed changer has a fixed setting and load demand is varying

Case ii) When load demand is fixed and the speed changer setting is varying

P.T.O.

Q3) a) Explain the heat rate curve and cost curve of a thermal generating unit. **[4]**

b) Discuss the economic scheduling of thermal plants (method of Lagrange's multiplier) neglecting the effect of transmission losses. **[6]**

c) Three power plants of total capacity 425MW are scheduled for operation to supply a total load of 300 MW. Find the optimum load scheduling if the pants have the following incremental cost characteristics and generator constraints. **[7]**

$$\frac{dF_1}{dP_{g1}} = 30 + 0.15P_{g1};\ 25 \le P_{g1} \le 125$$

$$\frac{dF_2}{dP_{g2}} = 40 + 0.20P_{g2};\ 30 \le P_{g2} \le 100$$

$$\frac{dF_3}{dP_{g3}} = 15 + 0.18P_{g3};\ 50 \le P_{g3} \le 200$$

OR

Q4) a) Discuss hydro constraints and thermal constraints used for Unit Commitment. **[4]**

b) Discuss the economic scheduling of thermal plants considering the effect of transmission losses. **[6]**

c) Determine the Priority list method using full-load average production cost for the data given below : **[7]**

Unit No.	**Loading Limits**		**Heat rate curve Parameters**			**Fuel Cost (K_i) (Rs/kCal)**
	Mm (MW)	**Max (MW)**	**a**	**b**	**c**	
1	100	400	0.006	7	600	1.1
2	50	300	0.01	8	400	1.2
3	150	500	0.008	6	500	1.0

Q5) a) What is power system interconnection? State its advantages. **[4]**

b) Explain the operation of power pools. **[6]**

c) Explain the following type of power interchange: Diversity Interchange. **[8]**

OR

Q6) a) Explain in detail: Capacity Interchange. **[4]**

b) Write a short note on Interchange evaluation with unit commitment. **[6]**

c) Comment on : **[8]**

i) Inadvertent Power Exchange

ii) Energy Banking

Q7) a) Draw the QV curve with appropriate labeling showing stable and unstable regions. **[4]**

b) What happens when there is voltage instability in the power system? Explain in detail. **[6]**

c) Why voltage stability study has to gain importance in the power system study? Explain. **[7]**

OR

Q8) a) Draw the PV curve with appropriate labeling showing a stable-unstable region. **[4]**

b) What observations were obtained from the PV curve? Enlist the disadvantages of the PV curve. **[6]**

c) Give the detailed classification of the voltage stability based on the time frame and based on nature of the disturbance. **[7]**

Total No. of Questions : 8]

SEAT No. :

P-7861

[Total No. of Pages : 3

[6181]-126A
B.E. (Electrical)
ADVANCED CONTROL SYSTEM
(2019 Pattern) (Semester-VII) (403142)

Time : 2½ Hours] ***[Max. Marks : 70***

Instructions to the candidates :

1) ***Solve Q1 or Q2, Q3 or Q4, Q5 or Q6, Q7 or Q8.***
2) ***Neat diagrams must be drawn wherever necessary.***
3) ***Figures to the right indicate full marks.***
4) ***Use of algorithm tables slide rule and electronic pocket calculator is allowed.***
5) ***Assume suitable data, if necessary.***

Q1) a) Determine State Transition matrix using Caley Hamilton method having **[6]**

$$A=\begin{bmatrix}0 & -1\\ 2 & -3\end{bmatrix}.$$

b) Define i) State ii) State Variables iii) State Space representation. **[6]**

c) Consider the state model with A as **[6]**

$$\begin{bmatrix}0 & 2 & 0\\ 4 & 0 & 1\\ -48 & -34 & -9\end{bmatrix}$$

Obtain Eigen values, Eigen vectors and Model matrix for matrix A.

OR

Q2) a) Determine transfer function Y(s)/U(s) for the state model given below **[6]**

$$\begin{bmatrix}\dot{x}_1\\ \dot{x}_2\end{bmatrix}=\begin{bmatrix}-3 & -1\\ -2 & 0\end{bmatrix}\begin{bmatrix}x_1\\ x_2\end{bmatrix}+\begin{bmatrix}0\\ 1\end{bmatrix}u$$

$$Y=\begin{bmatrix}1 & 0\end{bmatrix}\begin{bmatrix}x_1\\ x_2\end{bmatrix}$$

With D=0.

b) Check controllability and Observability of the system given below. **[6]**

$$A=\begin{bmatrix}-2 & 1\\ 1 & -2\end{bmatrix}, B=\begin{bmatrix}1\\ 0\end{bmatrix}, C=\begin{bmatrix}1 & -1\end{bmatrix}, D=\begin{bmatrix}0\end{bmatrix}$$

P.T.O.

c) Obtain the state space representation for the transfer function given below

$$\frac{Y(s)}{U(s)} = \frac{2}{s^3 + 2s^2 + 3s + 4}.$$ **[6]**

Q3) a) Explain the effect of Pole zero cancellation on the controllability and observability of the system. **[6]**

b) Determine the state feedback gain matrix k to place the closed loop poles at s = –2±j2$\sqrt{3}$, using transformation matrix method. **[6]**

$$\begin{bmatrix} \dot{x}_1 \\ \dot{x}_2 \end{bmatrix} = \begin{bmatrix} 0 & 1 \\ 0 & -2 \end{bmatrix} \begin{bmatrix} x_1 \\ x_2 \end{bmatrix} + \begin{bmatrix} 0 \\ 4 \end{bmatrix} u$$

c) Explain full order Observer with proper block diagram. **[6]**

OR

Q4) a) Construct the State model using phase variables if the system is described by the differential equation. **[6]**

$$\dddot{y} + 6\ddot{y} + 11\dot{y} + 10y = 3u$$

b) The system is described by $\dot{x} = Ax$, $Y = Cx$, where **[6]**

$$A = \begin{bmatrix} 0 & 1 & 0 \\ 0 & 0 & 1 \\ -1 & -5 & -6 \end{bmatrix} \quad B = \begin{bmatrix} 0 \\ 0 \\ 1 \end{bmatrix}$$

It is desired to place the poles at s = –1±j2, s=10. Determine state feedback gain matrix 'k' using Ackerman's formula.

c) Explain concept of effect of pole zero cancellation. **[6]**

Q5) a) State and explain Shannon's Sampling theorem. Also discuss aliasing effect. **[6]**

b) Explain mapping between s-plane and z-plane. **[6]**

c) Determine the stability of sampled data control system using Jury's stability analysis having following polynomial **[5]**

$2z^4 + 8z^3 + 12z^2 + 5z + 1 = 0$

OR

Q6) a) Explain in detail ZOH and FOH operation. Derive the transfer function of ZOH. **[6]**

b) Explain basic block diagram of the digital control system. **[6]**

c) Determine the stability by using Bilinear transformation for sampled data control system having polynomial $z^3 - 0.2z^2 - 0.25z + 0.05 = 0$. **[5]**

Q7) a) What is reaching law? Why is it required? Write expressions of constant rate reaching law, constant plus proportional rate reaching law and power rate reaching law. **[6]**

b) State and explain the linear quadratic regulator problem. **[6]**

c) Describe a self-tuning regulator with suitable block-diagram. **[5]**

OR

Q8) a) Derive the expression of equivalent control in sliding mode control. **[6]**

b) Describe a self-tuning regulator with suitable block-diagram. **[6]**

c) List out the properties of sliding mode control. **[5]**



Total No. of Questions : 8]

SEAT No. :

P-6576

[Total No. of Pages : 2

[6181]-127

B.E. (Electrical)

PLC AND SCADA

(2019 Pattern) (Semester - VII) (403143A) (Elective - III)

Time : 2½ Hours] ***[Max. Marks : 70***

Instructions to the candidates:

1) ***Answer Q1 or Q2, Q3 or Q4, Q5 or Q6 and Q7 or Q8.***
2) ***Neat diagrams must be drawn wherever necessary.***
3) ***Figures to the right indicate full marks.***
4) ***Assume suitable data, if necessary.***

Q1) a) What is ladder diagram? Explain rules for construction of ladder diagram. **[9]**

b) Explain ON delay timer in detail along with its timing diagram. **[8]**

OR

Q2) a) Explain OFF delay timer in detail along with its timing diagram. **[8]**

b) Construct a ladder diagram for any one of the following industrial applications. **[9]**

i) ON/OFF Temperature Control

ii) Bottle filling plant

Q3) a) Explain PID Controller with neat diagram. **[8]**

b) Discuss various methods of PID tuning. Select one of them and explain. **[9]**

OR

Q4) a) Explain with necessary diagram overload protection of AC Motor. **[8]**

b) List various speed control method of DC motor. Explain any one method in brief. **[9]**

P.T.O.

Q5) a) Define SCADA. State advantages, disadvantages and applications of SCADA. **[9]**

b) Explain how SCADA system is used in Petroleum Refining Process. **[9]**

OR

Q6) a) Explain how SCADA system is used in Automatic Substation Control. **[9]**

b) Explain all generations of SCADA Architectures with diagram. **[9]**

Q7) a) Explain seven layers of OSI model each with function and associated protocol. **[9]**

b) Write note on CIP Protocol. **[9]**

OR

Q8) a) List all SCADA Protocols and Explain any one in detail. **[9]**

b) What is DCS? Explain DCS architecture in detail. **[9]**

⌘⌘⌘

Total No. of Questions : 8]

SEAT No. :

P-6577

[Total No. of Pages : 2

[6181]-128

B.E. (Electrical)

POWER QUALITY MANAGEMENT

(2019 Pattern) (Semester - VII) (403143B) (Elective - III)

Time : 2½ Hours] ***[Max. Marks : 70***

Instructions to the candidates:

1) ***Answer Q1 or Q2, Q3 or Q4, Q5 or Q6, Q7 or Q8.***
2) ***Neat diagrams must be drawn wherever necessary.***
3) ***Figures to the right side indicate full marks.***
4) ***Assume suitable data if necessary.***

Q1) a) Define sag hence explain types of sag. **[9]**

b) Discuss causes of interruption and its mitigation methods. **[9]**

OR

Q2) a) Write a note on : **[9]**

i) Area of vulnerability

ii) CBEMA curve

b) Explain various causes and effects of voltage sag. **[9]**

Q3) a) Define the following terms hence explain sources of harmonics. **[9]**

i) Harmonics

ii) Sub Harmonics

iii) Inter Harmonics

b) What are triplen harmonics, how they are produced, discuss problems observed due to presence of triplens in to the system also state remedial measures. **[8]**

OR

Q4) a) Why 'Rabbit ear' shape of waveforms are produced, draw neat sketch of these waveforms hence explain harmonic production due to CSI and VSI. **[9]**

b) Describe how harmonics are produced due to discharge type of lamps, Draw nature of distorted waveform in such case. **[8]**

P.T.O.

Q5) a) What are harmonic resonances, Explain effect of Parallel resonance on the system. **[10]**

b) Explain effect of harmonic distortion on **[8]**

i) Capacitor

ii) Transformer

OR

Q6) a) Explain Harmonic study procedure hence describe various computer tools used for Harmonic analysis. **[8]**

b) Explain various devices for controlling harmonic distortion. **[10]**

Q7) a) Explain Power quality indices and standards for assessment disturbances. **[9]**

b) Explain various objectives of power quality monitoring hence explain various techniques of data collection? **[8]**

OR

Q8) a) Write a note on transducers used for power quality monitoring. **[9]**

b) Explain various specification requirement for power quality analyser according to EN50160 Standard. **[8]**

□□□

Total No. of Questions : 8]

SEAT No. : ____

P-6578

[Total No. of Pages : 2

[6181]-129

B.E. (Electrical Engineering)

HIGH VOLTAGE ENGINEERING

(2019 Pattern) (Semester - VII) (403143C) (Elective - III)

Time : 2½ Hours] ***[Max. Marks : 70***

Instructions to the candidates :

1) ***Solve Q.1 or Q.2, Q.3 or Q.4, Q.5 or Q.6, Q.7 or Q.8.***
2) ***Figures to the right indicate full marks.***
3) ***Neat diagram must be drawn wherever necessary.***
4) ***Assume suitable additional data, if necessary.***
5) ***Use of non-programmable calculator is allowed.***

Q1) a) Compare Simpson and Wilson theory of charge formation in clouds. **[4]**

b) Explain various reasons for over voltage. **[6]**

c) Explain in detail Reynold's and Mason's theory of charge formation in clouds. **[8]**

OR

Q2) a) Explain mechanisms of lightning strokes. **[4]**

b) Explain remedial actions for switching surges. **[6]**

c) What is insulation coordination? Explain statistical method of insulation coordination. **[8]**

Q3) a) What is cascading of transformer? State its merits & demerits. **[3]**

b) Explain series resonant circuit for generation of high AC voltage. **[6]**

c) Explain principle of operation of multistage impulse generator & describe any one tripping method. **[8]**

OR

Q4) a) Draw parallel resonant circuit for generation of high AC voltage. **[3]**

b) With circuit diagram explain working of Horn gap arrester. **[6]**

c) With neat diagram explain working of Tesla coil. State its advantages and applications. **[8]**

P.T.O.

Q5) a) Write short note on Parcial Discharge measurement. **[4]**

b) Explain electrostatic voltmeter with neat diagram. **[6]**

c) Describe sphere gap arrangement for measurement of High Voltage. **[8]**

OR

Q6) a) What is dielectric loss and dielectric constant? **[4]**

b) Describe capacitance voltage transformer (CVT). **[6]**

c) Explain electro-optical signal converter for measurement of high power frequency a.c current. **[8]**

Q7) a) Give classification of H.V. Laboratories. **[3]**

b) Describe any three tests conducted on bushings. **[6]**

c) Explain different high voltage tests carried out on surge arresters. **[8]**

OR

Q8) a) Write short note on shielding of High Voltage laboratory. **[3]**

b) Describe any three tests conducted on insulator. **[6]**

c) Explain design, layout and planning of high voltage laboratory. **[8]**

▽▽▽▽

Total No. of Questions : 8]

SEAT No. :

P-8692

[Total No. of Pages : 2

[6181]-130A
B.E. (Electrical Engineering)
ROBOTICS AND AUTOMATION
(2019 Pattern) (Semester - VII) (403143D) (Elective - III)

Time : 2½ Hours] *[Max. Marks : 70*

Instructions to the candidates :

1) ***Solve Q.1 or Q.2, Q.3 or Q.4, Q.5 or Q.6, Q.7 or Q.8.***
2) ***Figures to the right indicate full marks.***
3) ***Neat diagrams must be drawn wherever necessary.***
4) ***Use of logarithmic tables slide rule, Mollier charts, electronic pocket calculator and steam tables is allowed.***
5) ***Assume suitable data, if necessary.***

Q1) a) Explain in detail forward solution of robotic manipulator for SCARA robot. **[9]**

b) Explain the rules for establishing link coordinate frame in detail. **[9]**

OR

Q2) a) What is inverse kinematics? Explain the general property of existence and uniqueness of solution. **[9]**

b) Explain Denavit - Hartenberg (D-H) representation assigned for right-handed orthonormal coordinate frames. Write the algorithm (steps) for D-H representation for deriving the forward kinematics for any manipulator. **[9]**

Q3) a) Explain absolute and incremental encoders along with the diagram. Explain based on construction, advantages, disadvantages and applications. **[9]**

b) What is the significance (importance) of the sensors in robotics? Explain with any application. **[8]**

OR

Q4) a) Enlist the different proximity sensors used in Robotics? Explain any one with the schematic diagram. **[9]**

b) Explain the construction and working of LVDT along with its schematic diagram. **[8]**

P.T.O.

Q5) a) Explain the modelling of the D.C. motor with load with relevant equations and diagrams. **[9]**

b) Explain the concept of manipulator Jacobian, Jacobian inverse and singularities in brief. **[9]**

OR

Q6) a) Explain Joint Position Control (JPC) with the help of a neat sketch. **[9]**

b) Explain the Jacobian matrices for prismatic and revolute joint in detail. **[9]**

Q7) a) Explain the selection criteria of the robot for industrial applications. **[9]**

b) Explain how robots can be used in the defense and surveillance industry. **[8]**

OR

Q8) a) Explain robot application in case of Arc welding. **[9]**

b) Explain how robots can be used in home automation. **[8]**

▽▽▽▽

Total No. of Questions : 8]

SEAT No. : ____

P-6580

[Total No. of Pages : 2

[6181]-131
B.E. (Electrical)
ALTERNATE ENERGY SYSTEM
(2019 Pattern) (Semester-VII) (Elective - IV) (403144A)

Time : 2½ Hours] ***[Max. Marks : 70***

Instructions to the candidates :

1) ***Solve Q.1 or Q.2, Q.3 or Q.4, Q.5 or Q.6, Q.7 or Q.8.***
2) ***Figures to the right indicate full marks.***
3) ***Draw neat diagrams if necessary.***
4) ***Assume suitable data, if necessary.***

Q1) a) Define - **[10]**

i) Cut in speed

ii) Cut out speed

iii) Wind turbine efficiency

iv) Pitch control

v) Yaw control

b) What are the different factors affecting the selection of site for installation of wind generator? **[8]**

OR

Q2) a) Describe the various components of wind electric system with appropriate diagram. **[10]**

b) Explain the various types of speed control strategies for wind turbine. **[8]**

Q3) a) What are the biomass resources? Explain with the help of block diagram a biomass based power generation. **[9]**

b) What is meant by anarobic digestion? What are the factors affecting biodigestion? Draw a suitable diagram. **[8]**

OR

Q4) a) Explain any one gasifier in detail with neat diagram. **[9]**

b) Discuss the method of power generation from liquid waste. **[8]**

P.T.O.

Q5) a) What is a fuel cell? State its types. Describe any one type in detail with suitable diagram. **[9]**

b) Classify energy storage systems. Explain any two energy storage systems. **[9]**

OR

Q6) a) Explain the various methods of Hydrogen storage. **[9]**

b) Describe the use of Hydrogen in automobiles state its advantages and disadvantages. **[9]**

Q7) a) Define & explain with examples. **[9]**

i) Simple payback period

ii) Life cycle cost

iii) Net present value

b) A cogeneration system is expected to reduce company's annual energy bill by Rs.20 Lacs. If the capital cost of new cogen installation is Rs.90 Lacs & the operation & maintenance cost is Rs.5 Lacs. **[8]**

i) Calculate payback period of the project.

ii) What will be the Return on Investment (ROI)?

OR

Q8) a) Explain with example. **[8]**

i) Time value of Money

ii) Internal Rate of Return.

b) Draw a neat diagram of solar PV source connected to the grid List the parameters required for synchronization of PV source with grid. **[9]**



Total No. of Questions : 8]

SEAT No. :

P-6581

[Total No. of Pages : 2

[6181]-132

B.E. (Electrical)

ELECTRICAL AND HYBRID VEHICLE

(2019 Pattern) (Semester - VII) (403144B) (Elective - IV)

Time : 2½ Hours] ***[Max. Marks : 70***

Instructions to the candidates:

1) ***Solve Q.1 or Q.2, Q.3 or Q.4, Q.5 or Q.6, Q.7 or Q.8.***
2) ***Figures to the right indicate full marks.***
3) ***Assumme suitable data if necessary.***
4) ***Neat diagrams must be drawn wherever necessary.***

Q1) a) Explain any one energy management strategies for EV's. **[7]**

b) Write a short note on electric bus with a suitable example. **[5]**

c) Describe EV fleet management. **[6]**

OR

Q2) a) State and explain various types of sensors used in EV. **[6]**

b) Draw and explain Series hybrid configuration. **[6]**

c) Mention merits and demerits of fuel cell vehicle. **[6]**

Q3) a) Write a short note on vehicle dynamics. **[5]**

b) State different drivetrains configuration in HEVs and explain anyone. **[6]**

c) Explain any one power management strategy used for HEV. **[6]**

OR

Q4) a) Define hybridization and explain how it applies to different energy storage systems utilised in EVs. **[8]**

b) Draw parallel HEV configuration and explain its different operating modes. **[9]**

P.T.O.

Q5) a) Discuss motor torque calculations for an EV. **[7]**

b) Mention important considerations for battery pack design. **[5]**

c) Draw and explain induction motor control for an EV application. **[6]**

OR

Q6) a) Describe power calculation for EV. **[6]**

b) Draw and explain PMSM motor control for an EV application. **[7]**

c) Write a short note on CAN vehicle network. **[5]**

Q7) a) Define Startup and discuss important details about startup. **[6]**

b) Describe star labeling of BEE for battery pack. **[6]**

c) Write a short note on FAME - II policy. **[5]**

OR

Q8) a) Explain EV tariff rate considerations declare by government for EV charging. **[6]**

b) Discuss important considerations for li-ion battery recycling policy. **[6]**

c) Write important concerns about FAME II policy. **[5]**

⌘⌘⌘

Total No. of Questions : 8]

SEAT No. : ____

P-6582

[Total No. of Pages : 2

[6181]-133

B.E. (Electrical)

SPECIAL PURPOSE MACHINES

(2019 Pattern) (Semester - VII) (403144C) (Elective - IV)

Time : 2½ Hours] ***[Max. Marks : 70***

Instructions to the candidates:

1) ***Solve Q1 or Q2, Q3 or Q4, Q5 or Q6, Q7 or Q8.***
2) ***Figures to the right indicate full marks.***
3) ***Neat diagrams must be drawn wherever necessary.***
4) ***Assume suitable additional data, if necessary.***
5) ***Use of non-programmable calculator is allowed.***

Q1) a) Obtain mathematical expressions for abc to αβ coordinates. **[9]**

b) Explain field oriented control concept for PMSM. **[9]**

OR

Q2) a) Explain with block diagram control scheme for constant torque angle in case of PMSM. **[9]**

b) Explain significance of various transformations used in machine modelling. **[9]**

Q3) a) With a neat diagram explain construction of Switch Reluctance motor. State its applications. **[9]**

b) Explain effect of saturation in case of reluctance motor. **[8]**

OR

Q4) a) With suitable diagrams explain construction and working axial and radial air gap synchronous reluctance motors. **[9]**

b) Discuss selection of number of poles and pole arc in switched reluctance machine. **[8]**

P.T.O.

Q5) a) Explain construction of hybrid stepper motor. **[9]**

b) Explain concept of lead angle. How this is used in control of stepper motor? **[9]**

OR

Q6) a) Explain various applications of stepper motors. **[9]**

b) Explain the theory of torque production in case of stepper motor. **[9]**

Q7) a) Explain process of torque production in linear induction motor. **[9]**

b) Explain various performance characteristics of linear induction machine. **[8]**

OR

Q8) a) Explain different types of linear induction motors with their construction. **[9]**

b) Differentiate between single sided and double sided linear induction motor. **[8]**



Total No. of Questions : 8]

SEAT No. :

P-6583

[Total No. of Pages : 2

[6181]-134

B.E. (Electrical Engineering)

HVDC AND FACTS

(2019 Pattern) (Semester - VII) (Elective - IV) (403144 D)

Time : 2½ Hours] ***[Max. Marks : 70***

Instructions to the candidates :

1) ***Solve Q.1 or Q.2, Q.3 or Q.4, Q.5 or Q.6, Q.7 or Q.8.***
2) ***Figures to the right indicate full marks.***
3) ***Neat diagrams must be drawn wherever necessary.***
4) ***Assume suitable additional data, if necessary.***
5) ***Use of non-programmable calculator is allowed.***

Q1) a) Explain the VSC based HVDC system. **[4]**

b) Explain HVDC light technology in detail with its applications. **[6]**

c) How active and reactive power can be controlled by VSC? Explain in detail with suitable diagrams. **[8]**

OR

Q2) a) Explain Structure of VSC Link. **[4]**

b) Explain HVDC plus technology in detail. **[6]**

c) State the applications of VSC based HVDC systems. Explain any one in detailed. **[8]**

Q3) a) Write the Challenges of Power Electronics Controller. **[3]**

b) Define FACTS controllers. Also give brief description of FACTS controller. **[6]**

c) With suitable diagram explain back to back converter operation. State its advantage and also applications. **[8]**

OR

Q4) a) Classify the types of FACTS devices and explain any one in detail. **[3]**

b) Discuss the Principals of Conventional reactive power compensator. **[6]**

c) Elaborate with illustrative figures; converter control schemes for controlling output of converters and harmonic generation. **[8]**

P.T.O.

Q5) a) Write the objective of shunt compensation. **[4]**

b) Discuss VI characteristics and control schemes of SVC. **[6]**

c) Compare SVC and STATCOM on the basis of response time, hardware requirements, characteristics and operation. **[8]**

OR

Q6) a) Draw operating VI area of TCSC. **[4]**

b) With a neat diagram explain operation of TCSC. **[6]**

c) Explain principle of operation of STATCOM. Draw relevant phasor diagram. **[8]**

Q7) a) Explain Reactive power compensation using active filters. **[3]**

b) What are the constraints on the operation of UPFC? **[6]**

c) Elaborate with illustrative figures; Interline Power Flow Controller (IPFC). **[8]**

OR

Q8) a) What is active power filter? **[3]**

b) Draw and Explain block diagram of UPFC. **[6]**

c) Explain different operating modes of UPFC by using generalized power flow controllers. **[8]**

▽▽▽▽

Total No. of Questions : 8]

SEAT No. :

P6584

[Total No. of Pages : 3

[6181]-135
B.E. (Electrical Engineering)
SWITCHGEAR & PROTECTION
(2019 Pattern) (Semester - VIII) (403148)

Time : 2½ Hours] *[Max. Marks : 70*

Instructions to the candidates:

1) ***Answer Q1 or Q2, Q3 or Q4, Q5 or Q6, Q7 or Q8.***
2) ***Neat diagrams must be drawn wherever necessary.***
3) ***Figures to the right side indicate full marks.***
4) ***Assume suitable additional data if necessary.***
5) ***Use of non-programmable calculator is allowed.***

Q1) a) State the various type tests on high voltage A C Circuit Breaker. **[4]**

b) A 3 phase VCB is rated as 1500 A, 1000 MVA, 33 kV, 3 seconds.

Determine - **[6]**

i) Symmetrical breaking current

ii) Rated making current

iii) Short time rating

iv) Rated normal current

v) Breaking capacity

vi) Rated service voltage

c) Compare VCB with SF6 CB with reference to application, advantages, disadvantages, arc interrupting medium. **[8]**

OR

Q2) a) Discuss chemical properties of SF6 gas. **[4]**

b) Compare Gas Insulated Substation with Air insulated Substation. **[6]**

c) With neat diagram explain temperature rise test of Circuit Breaker. **[8]**

P.T.O.

Q3) a) Draw block diagram of static relay. Explain its working. State its advantages & disadvantages. **[10]**

b) Explain the use of Anti-Aliasing filter in the numerical relay **[7]**

OR

Q4) a) Draw a block diagram of numerical relay. Explain its working. State its advantages over conventional and static relays. **[10]**

b) Draw and explain block diagram of PMU. **[7]**

Q5) a) With neat diagram, explain inter turn fault protection in case of 3 phase alternator. **[4]**

b) A three phase 11 kV/ 132 kV, delta / star connected power transformer is protected by percentage differential protection scheme. The CTs on LT side have ratio of 600/5. Determine the CT ratio on HT side. **[6]**

c) With neat diagram, explain construction & working of Buchhloz relay. **[8]**

OR

Q6) a) What is single phasing in case of 3 phase induction motor? Draw neat diagram of single phase preventor. **[4]**

b) An 11 kV, 100 MVA, three phase alternator is protected by percentage differential scheme. Its neutral point is earthed through a resistance. The relay is set to operate when there is an out of balance current of 1A. The CT's have a ratio of 1000/5. If 90 % winding is protected against earth fault, what must be value of resistance to be connected in neutral to ground circuit? **[6]**

c) Discuss the following abnormal operating conditions in 3 phase alternator- **[8]**

i) Loss of prime mover

ii) Unbalanced loading Suggest suitable protection scheme in each of above cases.

Q7) a) Explain with diagram how impedance relay is used for distance protection? State drawbacks of impedance relay. Draw its characteristics on R-X plane. **[10]**

b) Draw block diagram of PLCC scheme used for transmission line protection. Briefly explain its components. **[7]**

OR

Q8) a) Explain the effect of - **[10]**

i) arc resistance

ii) Power swing on the operation of distance relays. In each of these cases, which relay gets highly effected?

b) Discuss Wide Area Measurement System. **[7]**

Total No. of Questions : 8]

SEAT No. :

P6585

[Total No. of Pages : 2

[6181]-136
B.E. (Electrical Engineering)
ADVANCED ELECTRICAL DRIVES AND CONTROL
(2019 Pattern) (Semester - VIII) (403149)

Time : 2½ Hours] *[Max. Marks : 70*

Instructions to the candidates:

1) ***Solve Q.1 or Q.2, Q.3 or Q.4, Q5 or Q6, Q7 or Q8.***
2) ***Figures to the right indicate full marks.***
3) ***Neat diagrams must be drawn wherever necessary.***
4) ***Assume suitable additional data, if necessary.***
5) ***Use of non-programmable calculator is allowed.***

Q1) a) Explain closed loop speed control of 3-phase Induction motor. **[4]**

b) Explain Plugging braking of Induction motor. What precautions are to be taken during plugging operation of Induction motor? **[6]**

c) Draw and explain block diagram of Vector control of induction motor.**[8]**

OR

Q2) a) Compare merits and demerits of VSI and CSI fed induction motor drive.**[4]**

b) A 3-Phase, 400V, 50Hz, 4 pole 1370rpm star connected squirrel cage induction motor has the following parameters: Rs=2Ω, Rr=3Ω, $X_s=X_r$ = 3.5Ω, Xm=80Ω. Motor is controlled by VSI at constant V/f ratio. Inverter allows frequency variation from 10Hz to 50Hz. For regenerative braking operation of VSI fed Induction motor determine:**[6]**

i) Speed for frequency of 30Hz and 80% of full load torque.

ii) Frequency for a speed of 1000 rpm and full load torque.

c) Explain the principle of vector control of Induction motor. **[8]**

P.T.O.

Q3) a) Describe working of BLDC motor for motoring and regenerative braking with neat block diagram with. **[9]**

b) Explain closed loop control of BLDC drive. Also judge the suitability of this motor for EV application. **[9]**

OR

Q4) a) Explain variable DC link converter topology for BLDC motor for motoring and regenerative braking. **[9]**

b) Describe with necessary diagram vector control of BLDC motor. State the advantages of vector control. **[9]**

Q5) a) Draw neat diagram and explain vector control of PM synchronous motor. **[8]**

b) Draw speed torque characteristics of PMSM. Explain application of synchronous reluctance motor in EV. **[8]**

OR

Q6) a) Explain different topologies of rotor construction used in PMSM. Also state application of each. **[8]**

b) Draw construction of synchronous reluctance motor and explain its operation. **[8]**

Q7) a) Explain requirement and choice of drives for steel rolling mills. Why four quadrant operations are needed in rolling mill drives? **[10]**

b) How drives are selected for Solar and battery powered application. **[8]**

OR

Q8) a) Write short note on any two: **[10]**

i) Classes of motor duty.

ii) Requirements of drive for Traction.

iii) Requirements of drive for Machine tools.

b) With schematic diagram explain drives required is sugar industries. Will modern power converters be useful in sugar industry? Explain. **[8]**

Total No. of Questions: 8]

SEAT No. : ____

P6586

[Total No. of Pages : 2

[6181]-137
B.E. (Electrical)
DIGITAL CONTROL SYSTEMS
(2019 Pattern) (Semester-VIII) (403150 A) (Elective-V)

Time : 2½ Hours] ***[Max. Marks : 70***

Instructions to the candidates:

1) ***Answer Q1 or Q2, Q3 or Q4, Q5 or Q6, Q7 or Q8.***
2) ***Neat diagrams must be drawn wherever necessary.***
3) ***Figures to the right indicate full marks.***

Q1) a) Given

$$x(k+1)=\begin{pmatrix}1 & 1\\ -2 & -1\end{pmatrix}x(k)+\begin{pmatrix}1 & 0\\ 0 & 1\end{pmatrix}u(k)\ \&\ y(k)=\begin{pmatrix}1 & 0\\ 0 & 1\end{pmatrix}x(k)$$

Determine controllability & observability of the system. **[10]**

b) What is principle of duality? Explain the effect of pole-zero cancellation on controllability & observability. **[7]**

OR

Q2) a) Forthe system having

$$G=\begin{pmatrix}0 & 1\\ -0.16 & -1\end{pmatrix} H=\begin{pmatrix}1\\ 0\end{pmatrix}; C=\begin{pmatrix}0 & 1\end{pmatrix}$$

Determine a suitable gain matrix K such that the system will have Eigen values at Z = 0.5+j0.5, Z=0.5-j0.5. **[10]**

b) Define Controllability and Observability and Explain Tests for Controllability and Observability. **[7]**

Q3) a) For a given system

$$G=\begin{pmatrix}0 & 15\\ 1 & 0\end{pmatrix}\ H=\begin{pmatrix}0\\ 1\end{pmatrix} C=\begin{pmatrix}0 & 2\end{pmatrix}$$

Determine observer gain matrix Ke such that $S_1, S_2 = -2 \pm j3$ are eigen values of observer gain matrix. **[10]**

b) Explain full order Observer with proper block diagram. **[8]**

OR

P.T.O.

Q4) a) Derive Ackerman's formula for determination of observer gain matrix Ke. **[10]**

b) State and explain state feedback with integral control. **[8]**

Q5) a) Consider the system defined by

$$\frac{Y(Z)}{U(Z)} = \frac{3z^2 - 11z}{z^3 - 6z^2 + 11z - 6}$$

Determine state space representation in Controllable canonical form & observable canonical form. **[10]**

b) Explain Trapezoidal method & Bilinear transformation with frequency warping. **[7]**

OR

Q6) a) Consider the pulse transfer function of discrete time system given as

$$\frac{Y(z)}{U(z)} = \frac{b_0 z^n + b_1 z^{n-1} + b_2 z^{n-2} + \ldots\ldots + b_n}{z^n + a^1 z^{n-1} + a_2 z_{n-2} + \ldots\ldots + a_n}$$

Derive its Controllable canonical form & Observable canonical form. **[10]**

b) Explain Eulers forward & backward method with suitable example. **[7]**

Q7) a) Explain Hybrid system simulation with block diagram & their application. **[10]**

b) Explain Computer program structure for simulation of discrete time control system with algorithm & flow charts. **[8]**

OR

Q8) a) Draw a neat block diagram of digital position control scheme and Explain the function of each block. **[10]**

b) Explain stepper motor control with proper block diagram. **[8]**



Total No. of Questions: 8]

SEAT No. : ____

P6587

[Total No. of Pages :2

[6181]-138
B.E. (Electrical)
RESTRUCTURING & DEREGULATION
(2019 Pattern) (Semester-VIII) (403150 B) (Elective-V)

Time : 2½ Hours] ***[Max. Marks : 70***

Instructions to the candidates:

1) ***Solve Q.1 or Q.2, Q.3 or Q.4, Q.5 or Q.6, Q.7 or Q.8.***
2) ***Neat diagrams must be drawn wherever necessary.***
3) ***Use of Calculator is allowed.***
4) ***Assume suitable data if necessary.***

Q1) a) Explain types and methods of regulation. **[9]**

b) Explain Principals of tariff setting. **[8]**

OR

Q2) a) Explain the objectives of "Electricity Act 2010". Also explain the guidelines under this act. **[9]**

b) Describe in detail the regulatory process in India. **[8]**

Q3) a) Explain the following in detail Models based on Energy Trading. **[9]**

i) Monopoly

ii) Single buyer

b) Explain the following ISO models in detail. **[9]**

i) Mini ISO

ii) Micro ISO

iii) Max ISO

OR

Q4) a) Explain the following in detail. **[9]**

i) Energy Exchange

ii) Day ahead Market

iii) Term ahead Market

b) Explain the following: **[9]**

i) Renewable Energy Credits and Trading of Renewable Energy Credits

ii) Carbon Credits and Trading of Carbon Credits

P.T.O.

Q5) a) Explain the rules that govern electricity markets. Specity the peculiarities of electricity as commodity. **[9]**

b) Explain the following terms in context to electricity markets: **[8]**

i) HHI index

ii) Lerner index

OR

Q6) a) Explain the following terms: **[9]**

i) Market Clearing Price

ii) Market Power

iii) Market Efficiency

b) Explain in detail. **[8]**

i) Forward contracts and forward markets

ii) Future contracts and future markets

Q7) a) What do you understand by cost components of transmission system? Explain the cost allocation of transmission system **[9]**

b) Define and explain **[9]**

i) Firm transmission right (FTR)

ii) Available transfer capability (ATC)

iii) Capacity Benefit Margin (CBM)

OR

Q8) a) Name the different transmission pricing methods and explain any two in detail. **[9]**

b) Explain congestion in power network and reasons for congestion. **[9]**



Total No. of Questions: 8]

SEAT No. : ____

P6588

[Total No. of Pages :2

[6181]-139
B.E (Electrical Engineering)
SMART GRID
(2019 Pattern) (Semester-VIII) (403150 C) (Elective-V)

Time : 2½ hours] ***[Max. Marks : 70***

Instructions to the candidates:

1) ***Solve Q.1 or Q.2, Q.3 or Q.4, Q.5 or Q.6, Q.7 or Q.8.***
2) ***Figures to the right indicates full marks***
3) ***Neat diagrams must be drawn wherever necessary.***
4) ***Assume suitable data if necessary.***
5) ***Use of non Programmable calculator is allowed.***

Q1) a) Explain IEC 61850 communication standard list its functions. **[4]**

b) Explain the different functions of Adrance metering Infrastructure (AMI) **[6]**

c) Draw and explain functional Block diagram of smart meter **[8]**

OR

Q2) a) Explain IS 16444 standard comment on its Structure **[4]**

b) Explain the need of GIS in smart Grid **[6]**

c) Draw and explain functional Block diagram of smart substation **[8]**

Q3) a) List the important factors for assessment smart grid communication protocols **[3]**

b) With the help of neat diagram explain the communication Architecture of HAN with smart meter **[6]**

c) Explain the protocol Architecture of zigbee **[8]**

OR

Q4) a) List the important system constraints when developing security requirements in SG **[3]**

b) Explain the role of NAN with help of neat diagram **[6]**

c) Explain with the help of neat diagram WAMPAC **[8]**

P.T.O.

Q5) a) Differentiate between microgrid and smartgrid **[4]**

b) Explain with help of neat diagram microgrid to pology with storage Technologies **[6]**

c) What is centralized and decentralized control of microgrid explain with help of neat diagram. **[8]**

OR

Q6) a) Define microgrid List the applications of microgrid **[4]**

b) Discuss the various microgrid operation strategies with help of neat diagram **[6]**

c) Explain the microgrid Architecture with help of neat diagram **[8]**

Q7) a) List the power quality issues with smart grid **[3]**

b) Explain the different types of data analytics in smart grid **[6]**

c) What are the key performance indicators for load forecasting **[8]**

OR

Q8) a) List the various reliability indices of smart grid **[3]**

b) Write a note on smart appliances **[6]**

c) Explain the different principle areas of home automation **[8]**



Total No. of Questions: 8]

SEAT No. : ____

P6589

[Total No. of Pages :2

[6181]-140
B.E (Electrical)
SENSOR TECHNOLOGY
(2019 Pattern) (Semester-VIII) (403150 D) (Open Elective) (Elective-V)

Time : 2½ Hours] ***[Max. Marks : 70***

Instructions to the candidates:

1) ***Solve Q.1 or Q.2, Q.3 or Q.4, Q.5 or Q.6, Q.7 or Q.8.***
2) ***Figures to the right side indicate full marks.***
3) ***Assume suitable data if necessary.***

Q1) a) What is near infrared spectroscopy (NIRs) ? Explain working principle of NIRs. Why to use NIRs? **[10]**

b) Explain optical isolator, it's working and applications. **[7]**

OR

Q2) a) Explain 3D depth camera sensor with a sketch. **[7]**

b) Explain different types of depth sensor. Explain any one with neat sketch. **[10]**

Q3) Enlist types of Humidity sensors. Explain HDC 1080 humidity sensor with neat sketch. Compare HDC1010, HDC1080 and HDC2010 humidity sensors. **[18]**

OR

Q4) Explain INA240 current sense amplifier and DRV 5053 Hall effect sensor **[18]**

Q5) a) Explain fluid flow sensing using fiber optics with neat sketch. **[6]**

b) How to measure flow rate with level sensor? Explain flume and weir. **[7]**

c) What is the application of level sensors? **[4]**

OR

Q6) a) Explain mm Wave sensor. **[6]**

b) Explain AFE5805 ultrasonic sensor with application. **[7]**

c) Explain LVDT with its constructional details and working principle. **[4]**

P.T.O.

Q7) a) List different home appliance sensors. **[4]**

b) Explain types of laser sensors and explain any one of them **[6]**

c) Write short note on application of sensors in drone **[8]**

OR

Q8) a) Describe the principle of 'smart transmitter'. What and where does it transmit? Discuss some aspect of its development in recent years. **[10]**

b) What are the different deviations that need be compensated in sensor systems? How is a non linearity taken care of in a present day smart sensor? [8]



Total No. of Questions : 8]

SEAT No. :

P6590

[Total No. of Pages : 2

[6181]-141
B.E. (Electrical)
EHV AC TRANSMISSION
(2019 Pattern) (Semester - VIII) (Elective - VI) (403151 (A))

Time : 2½ Hours] *[Max. Marks : 70*

Instructions to the candidates:

1) ***Answer all questions.***
2) ***Answer Q.1 or Q.2 and Q.3 or Q.4 and Q.5 or Q.6 and Q.7 or Q.8.***
3) ***Neat diagram must be drawn wherever necessary.***
4) ***Figures to the right indicate full marks.***
5) ***Assume suitable data if necessary.***
6) ***Use of Calculator is allowed.***

Q1) a) Explain surface voltage gradient on single conductor. **[8]**

b) Explain Field of sphere gap and also derive equation as $S_1S_2=R^2$. **[8]**

OR

Q2) a) Derive the condition for maximum charge on EHV conductor of three phase line in terms of elements of matrix [M] where [M] = [P]-1 and [P] is maxwell's potential coefficient matrix. **[8]**

b) Determine Surface voltage Gradient on conductors under Mangoldt (Markt-Mengele) Formulae. **[8]**

Q3) a) Evaluate the horizontal, vertical and total value of electrostatic field components near the single circuit transmission line, which are energized by three phase voltages. **[9]**

b) Derive expression for electrostatic induction on un energized circuit of double circuit line. **[9]**

OR

Q4) a) Derive the expression for magnetic field calculation of horizontal configuration of Single circuit of three phase lines. **[9]**

b) Discuss effect of high electrostatic field on: **[9]**

i) Humans
ii) Animals
iii) Plants

P.T.O.

Q5) a) Explain the corona formation and methods to reduce the corona effects. **[9]**

b) Draw a charge-voltage diagram and derive and expression $Pc = 1/2\ KC\ (Vm^2\text{-}Vo^2)$ for corona loss. **[9]**

OR

Q6) a) With the help of simple block diagram, explain the audible noise measuring circuit in EHV AC lines. **[9]**

b) State and explain at least 4 formulae for power loss due to corona. **[9]**

Q7) a) Write note on various properties of XLPE used in EHV cables. **[9]**

b) Name the materials used for insulation in E.H.V cables; and state the properties of SF6 gas as an insulating in cables. **[9]**

OR

Q8) a) State and Explain at least four factors to be considered in the design of EHV lines based upon the steady state limits. Also state their limiting value. **[9]**

b) Define tan δ loss factor and derive an expression for insulation resistance of acable. **[9]**

Total No. of Questions: 8]

SEAT No. :

P6591

[Total No. of Pages :3

[6181]-142
B.E (Electrical Engineering)
ILLUMINATION ENGINEERING
(2019 Pattern) (Semester-VIII) (403151B) (Elective-VI)

Time : 2½ Hours] ***[Max. Marks : 70***

Instructions to the candidates:

1) ***Solve Q.1 or Q.2, Q.3 or Q.4, Q.5 or Q.6, Q.7 or Q.8.***
2) ***Figures to the right side indicate full marks.***
3) ***Neat diagram must be drawn wherever necessary.***
4) ***Assume suitable data jf necessary.***
5) ***Use of non-programmable calculator is allowed.***

Q1) a) Write a short note on **[4]**

i) Coefficient of utilization

ii) beam angle

b) What are the cavities to be considered in Indoor lighting design? Define and explain each of them. Also draw a cross section of a room showing these cavities. **[6]**

c) Explain the various factors to be considered for design of indoor illumination scheme **[8]**

OR

Q2) a) What is Light loss fctor? State its types and explain. **[4]**

b) What is Polar Curve? Describe its types. State its significance. **[6]**

c) What are different components of flux are considered in zonal cavity method Explain each of them **[8]**

Q3) a) Define following terms **[3]**

i) Refiection factor

ii) Lumen

b) State and explain the advantages of good illumination schemes **[6]**

c) Explain the procedure for design of illumination for an aquarium and swimming pool. **[8]**

OR

P.T.O.

Q4) a) Define following terms **[3]**

i) Depreciation factor

ii) Waste light factor

b) Explain briefly with respect to residential lighting the following: **[6]**

i) General lighting

ii) Decorative lighting

iii) Spot / Focus lighting

c) Explain the procedure for design of illumination for hospitals. **[8]**

Q5) a) Explain following terms with respect to road lighting — **[4]**

i) Uniformity ratio

ii) Field of vision

b) Explain the illumination design for advertisement/ hoardings. **[6]**

c) What are the key factors in designing an outdoor illumination scheme? Explain each in brief. **[8]**

OR

Q6) a) With suitable diagram explain isolux diagram for designing outdoor illumination scheme. **[4]**

b) Explain following terms with respect to road lighting — **[6]**

i) visual performance

ii) visual comfort

iii) Glare

c) Explain the various Road classifications according to BIS. **[8]**

Q7) a) Compare intelligent lighting for domestic and commercial use. **[3]**

b) Explain natural light conduiting system (any two) **[6]**

c) Explain the working principle and construction of OLED. Support the answer with a diagram. **[8]**

OR

Q8) a) What are intelligent LED Fixtures? Explain. **[3]**

b) Explain working of Laser arrangement with suitable diagram. State types of LASERs. **[6]**

c) Explain construction and working of Fiber optic cables. State and explain its types. (any two). Support your answer with diagram. **[8]**



Total No. of Questions: 8]

SEAT No. :

P6592

[Total No. of Pages :2

[6181]-144
B.E. (Electrical)
ARTIFICIAL INTELLIGENCE AND MACHINE LEARNING
(2019 Pattern) (Semester-VIII) (403151D) (Open Elective) (Elective-VI)

Time :2½ Hours] ***[Max. Marks : 70***

Instructions to the candidates:

1) ***Answer Q1 or Q2, Q3 or Q4, Q5 or Q6, Q7 or Q8.***
2) ***Neat diagrams must be drawn wherever necessary.***
3) ***Figures to the right side indicate full maths.***
4) ***Assume Suitable data if necessary.***

Q1) a) Define propositional logic and explain its significance in building a knowledge base. **[4]**

b) Discuss the process of constructing a knowledge base using first-order logic. **[6]**

c) Explain the concept of probabilistic reasoning over time and its importance in modeling dynamic systems. **[8]**

OR

Q2) a) Provide an example of converting a naturai language statement into a propositional logic representation. **[4]**

b) Discuss the limitations of first-order logic in representing uncertainty and incomplete information. **[6]**

c) Explain the concept of hidden Markov models (HMMs) and their application in modeling temporal uncertainty. **[8]**

Q3) a) Discuss the role of labeled training data in supervised learning and its significance. **[4]**

b) Define the VC dimension and its significance in the theory of supervised learning. **[6]**

c) Define the concept of Probably Approximately Correct (PAC) learning and its goals. **[7]**

OR

P.T.O.

Q4) a) Provide an example of a real-world application where learning a class from examples is used. **[4]**

b) Provide examples of hypothesis classes with low and high VC dimensions. **[6]**

c) Explain the importance of the sample size and the confidence parameter in PAC learning. **[7]**

Q5) a) Define linear regression and explain its basic principles in supervised learning. **[4]**

b) Describe the lasso regression method and its ability to perform variable selection. **[6]**

c) Explain the difference between linear regression and logistic regression. **[8]**

OR

Q6) a) Define shrinkage methods in the context of linear regression. **[4]**

b) Discuss the least angle regression (LARS) algorithm and its advantages over other methods. **[6]**

c) How does the concept of decision boundaries apply to logistic regression? **[8]**

Q7) a) Explain the concept of association rules and their significance in market basket analysis. **[4]**

b) Explain the concept of temporal difference (TD) learning in reinforcement learning. **[6]**

c) Define cluster analysis and its purpose in unsupervised learning. **[7]**

OR

Q8) a) What is the Apriori algorithm, and how does it help in generating association rules? **[4]**

b) Discuss the concept of centroid initialization and its impact on the K-means algorithm. **[6]**

c) Discuss the key components of a reinforcement learning problem. **[7]**



Total No. of Questions : 8]

SEAT No. : ____

P-6593

[Total No. of Pages : 2

[6181]-151

B.E. (Electronics Enginnering)

VLSI DESIGN

(2019 Pattern) (Semester - VII) (404201)

Time : 2½ Hours] ***[Max. Marks : 70***

Instructions to the candidates:

1) ***Answer Q1 or Q2, Q3 or Q4, Q5 or Q6, Q7 or Q8.***
2) ***Neat diagrams must be drawn wherever necessary.***
3) ***Figures to the right side indicate full marks.***
4) ***Use of calculator is allowed.***
5) ***Assume Suitable data, if necessary.***

Q1) a) Draw and explain DRAM cell and explain different types of DRAM. **[8]**

b) Write short notes on : **[10]**

i) Classification of memory

ii) Sense Amplifier

OR

Q2) a) Explain the organisation of memory in detail. **[6]**

b) Compare SRAM with DRAM. **[6]**

c) Why is periodic refresh necessary in DRAM and how are refresh circuits implemented? **[6]**

Q3) a) What is clock jitter and what are its sources? Mention differences between clock jitter and clock skew. **[9]**

b) Write a short note on Power Distribution and Clock Distribution. **[8]**

OR

Q4) a) Draw and explain the Global Routing and Switchbox Routing. **[9]**

b) Describe the Interconnect Properties and Wiring Plans in detail. **[8]**

P.T.O.

Q5) a) What do you mean by Shannon's decomposition? Implement logic gates like AND, XOR and NOT using 2:1 MUX. **[9]**

b) Explain fast carry chains and cascade carry chains in FPGA with neat sketch. **[9]**

OR

Q6) a) Draw and explain JTAG TAP controller states. **[9]**

b) What is need of boundary scan? Explain boundary scan 1149.1 standard in detail. **[9]**

Q7) a) What is scaling and scaling factor? Explain Constant field scaling in detail. **[9]**

b) Draw CMOS and Stick Diagram for a 2 input OR gate. List down different layout editors / tools available in VLSI Design. **[8]**

OR

Q8) a) Draw layout of CMOS inverter and mention at least 6 design rules. **[9]**

b) With diagram explain Modeling and extraction of circuit parameters from physical layout. **[8]**

⌘⌘⌘

Total No. of Questions : 8]

SEAT No. :

P-6594

[Total No. of Pages : 2

[6181]-152

B.E. (Electronics)

ADVANCED POWER ELECTRONICS

(2019 Pattern) (Semester - VII) (404202)

Time : 2½ Hours] ***[Max. Marks : 70***

Instructions to the candidates:

1) ***Answer Q1 or Q2, Q3 or Q4, Q5 or Q6, Q7 or Q8.***
2) ***Neat diagrams must be drawn wherever necessary.***
3) ***Figures to the right indicate full marks.***
4) ***Assume suitable data whenever necessary.***

Q1) a) Explain Motor Performance Parameter. **[8]**

b) Explain 1Φ converter fed drives for separately excited DC motor for continuous operation with the help of circuit diagram and waveforms. **[9]**

OR

Q2) a) A 15 hp, 220V, 2000 rpm, separately excited dc motor controls a load requiring a torque TL = 45 N-m at a speed of 1200 rpm. Field circuit resistance R_f = 147 Ω, armature circuit resistance Ra = 0.25Ω and the voltage constant of the motor is Kv = 0.7032 V/A-rad/S. The field voltage is 220v. Armature current can be assumes to be continuous and ripple free. Determine, **[12]**

i) Back emf Eg

ii) Required armature voltage Ea and

iii) The rated armature current of the load.

b) Explain working principle of chopper fed drives with the help of circuit diagram and waveforms. **[5]**

Q3) a) Draw and Explain characteristics of Induction motor. **[9]**

b) Explain working of variable frequency PWM VSI drives. **[8]**

OR

P.T.O.

Q4) a) Explain stator voltage control, stator voltage and frequency control, rotor resistance control method for controlling speed of induction motor. **[10]**

b) Explain braking of induction motors. **[8]**

Q5) a) Explain with neat circuit diagram and waveforms working of permanent Magnet brushless DC motor drive. **[9]**

b) Explain operation of servo motor drive with neat circuit diagram and waveforms. **[9]**

OR

Q6) a) Explain working of switched reluctance motor drive with neat circuit diagram and waveforms. **[9]**

b) Explain working of synchronous reluctance motor drive with neat circuit diagram and waveforms. **[9]**

Q7) a) Explain PV characteristics of solar. **[4]**

b) Explain the working of solar power system. **[6]**

c) Explain types of PV system : **[8]**

i) Stand-alone PV system.

ii) Grid connected PV system.

OR

Q8) a) Explain working of Wind power system. **[4]**

b) Compare Standalone wind energy system and Grid connected wind energy system. **[8]**

c) Explain types of wind generator control of wind turbines. **[6]**



Total No. of Questions : 8]

SEAT No. :

P6595

[Total No. of Pages : 2

[6181]-153

B.E. (Electronics Engineering)

ELECTRONIC SYSTEM DESIGN

(2019 Pattern) (Semester - VII) (404203)

Time : 2½ Hours] *[Max. Marks : 70*

Instructions to the candidates:

1) ***Answer Q1 or Q2, Q3 or Q4, Q5 or Q6, and Q7 or Q8.***
2) ***Figures to the right side indicate full marks..***
3) ***Assume suitable data, if necessary.***

Q1) a) Compare CISC & RISC microcontroller architecture. **[6]**

b) Explain interfacing of ADC with microcontroller. **[6]**

c) Explain in detail :1) LIN 2)Flex Ray protocol. **[6]**

OR

Q2) a) Compare Harvard & Von- Neuman architecture in detail. **[6]**

b) Explain interfacing of humidity sensor with microcontroller. **[6]**

c) Write a short note on SPI & CAN bus. **[6]**

Q3) a) With the help of neat diagram, explain different phases of software design. **[9]**

b) What are the features of simulators, what is the role of documentation in product design & development? **[8]**

OR

Q4) a) What is the need of software testing? State and explain different tools used for software testing. **[9]**

b) Explain factors affecting the choice of assembly language & high level language. **[8]**

Q5) a) Explain PCB design rules for analog circuits. **[9]**

b) Explain the following phenomenon in high speed PCB design & how it can be prevented. i) Crosstalk ii) Reflection. **[8]**

OR

P.T.O.

Q6) a) Explain in details : Shielding & Guarding in precision circuits. **[9]**

b) Explain rules of PCB Design for mixed signal circuits. **[8]**

Q7) a) Explain different types of temperature test to be carried out to test electronic product. **[6]**

b) Explain the importance of DC analysis with example. **[6]**

c) List different features of MSO. Draw and explain it with the help of block diagram. **[6]**

OR

Q8) a) Explain any two analysis used in finding fault in circuit. **[6]**

b) What is the need of probes & what are the different probes used in logic analyzer? **[6]**

c) Explain the terms & their significance in DSO : Band width, sampling rate, probe impedance, memory depth. **[6]**



Total No. of Questions : 8]

SEAT No. :

P-6596

[Total No. of Pages : 2

[6181]-154

B.E. (Electronics/E & TC)

SPEECH PROCESSING

(2019 Pattern) (Semester - VII) (Elective - III) (404184-A)

Time : 2½ Hours] ***[Max. Marks : 70***

Instructions to the candidates:

1) ***Attempt Q1 or Q2, Q3 or Q4, Q5 or Q6, Q7 or Q8.***
2) ***Neat diagram must be drawn wherever necessary.***
3) ***Figures to the right indicate full marks.***
4) ***Make Suitable assumptions wherever necessary.***
5) ***Use of Calculator is allowed.***

Q1) a) Explain the method of finding LPC coefficients using autocorrelation method. **[6]**

b) Compare mel scale and bark scale. **[4]**

c) Explain in detail estimation of formant and pitch parameters using cepstrum. **[8]**

OR

Q2) a) Explain Levinson-Durbin recursive algorithm for calculation of Predictor Coefficients? **[9]**

b) What is MFCC? Explain the method to calculate MFCC using block diagram? **[9]**

Q3) a) With the help of block diagram explain homomorphic speech processing? **[8]**

b) What is APCM? Compare APCM with companded PCM. Explain how companded PCM will improve the SNR of the signal? **[9]**

OR

Q4) a) Explain Sub-Band Coding of speech. **[8]**

b) Explain Linear Prediction Based Vocoders. **[9]**

P.T.O.

Q5) a) Explain speech synthesis and Compare Speaker identification and Speaker verification. **[9]**

b) Draw a block diagram and explain the operation of Text-To-Speech (TTS) converter. **[9]**

OR

Q6) a) What is prosody in speech production? What is the importance of prosody in speech? **[9]**

b) What is concatenative synthesis? State and explain sub types of concatenative synthesis. **[9]**

Q7) a) Explain the following performance parameters :- **[8]**

i) True Positives

ii) True negatives

iii) False Positive

iv) False negatives

b) Explain Recurrent Neural Network, State its advantages and disadvantages. **[9]**

OR

Q8) a) Explain the following performance parameters :- **[8]**

i) Sensitivity

ii) Specificity

iii) Area under curve

iv) Receiver Operating Characteristics.

b) Explain Text to speech synthesis using support vector machine. **[9]**

Total No. of Questions : 8]

SEAT No. :

P-6597

[Total No. of Pages : 2

[6181]-155

B.E. (Electronics Engineering)

INTERNET OF THINGS

(2019 Pattern) (Semester - VII) (404204A) (Elective - III)

Time : 2½ Hours] ***[Max. Marks : 70***

Instructions to the candidates:

1) ***Answer Q1 or Q2, Q3 or Q4, Q5 or Q6 and Q7 or Q8.***
2) ***Figures to the right indicate full marks.***
3) ***Assume suitable data, if necessary.***

Q1) a) What is WSN? Explain history of WSN. State the characteristics of WSN. **[6]**

b) State the difference between PaaS and SaaS. **[6]**

c) Explain with the help of neat diagram how WSN can be used in Smart Home application. **[8]**

OR

Q2) a) What is full form of IaaS? Explain what is IaaS? What are merits and demerits of IaaS. **[6]**

b) What are challenges of cloud computing? Explain each challenge in brief. **[6]**

c) With the help of neat diagram explain how WSN can be used in Healthcare system. **[8]**

Q3) a) What is ultrasonic sensor? Draw interfacing diagram of ultrasonic sensor with Raspberry Pi. Also write the program for same. **[8]**

b) Explain the principle of LDR sensor. Draw the interfacing diagram of LDR sensor with Arduino Board. Also write the program for same. Any one application where LDR sensor can be used. **[8]**

OR

P.T.O.

Q4) a) Draw interfacing diagram of LM35 with Arduino Board. Also write the program to read temperature and display on serial monitor screen. Also draw its flowchart. **[8]**

b) Draw interfacing diagram of LED with Raspberry Pi. Also write the program for blinking LED with a delay of one second. Also draw its flowchart. **[8]**

Q5) a) What are different types of data analytics? Explain each type by giving appropriate example. **[8]**

b) Explain the following terms : **[8]**

i) Analysis of Variance

ii) Data Dispersion

OR

Q6) a) Draw basic architecture of Big Data and explain the function of each block. **[8]**

b) Define Big Data. What are the characteristics of Big data? Explain any two types of Big Data. **[8]**

Q7) a) Write short note on IoT for Industrial Automation. **[6]**

b) With the help of neat diagram explain IoT based Smart Car Parking system. **[6]**

c) Explain Smart Agriculture system using IoT. **[6]**

OR

Q8) a) Explain how wearable technologies are partnering with smart cities to address social issues. **[6]**

b) Draw and explain Air pollution Monitoring system using IoT. **[6]**

c) With the help of neat diagram explain IoT based Greenhouse Monitoring system. **[6]**

⌘⌘⌘

Total No. of Questions : 8]

SEAT No. :

P-8687

[Total No. of Pages : 2

[6181]-156
B.E. (Electronics Engineering)
SOFTWARE DEFINED RATIO
(Semester-VII) (2019 Pattern) (404204B) (Elective-III)

Time : 2½ Hours] ***[Max. Marks : 70***

Instructions to the candidates :

1) ***Solve question Q1 or Q2, Q3 or Q4, Q5 or Q6 and Q7 or Q8.***
2) ***Figures to the right side indicate full marks.***
3) ***Assume the suitable data, if necessary.***

Q1) a) Explain the significance of sample timing algorithms in digital signal processing and explain one of the techhiques used for sample timing synchronization. **[9]**

b) State the importance of channel estimation in communication systems and explain techniques used for channel estimation in wireless communication. **[9]**

OR

Q2) a) Why is frequency offset estimation important in wireless communication? What are some common methods for frequency offset correction in software-defined radio? **[9]**

b) Explain how OFDM is implemented in software-defined radio systems, state its advantages and give one key challenge in OFDM implementation in SDR. **[9]**

Q3) a) With an example explain the role of computational platform in implementation of cognitive radio system. **[9]**

b) Explain elastic spectrum management and compare it with traditional spectrum management. **[9]**

OR

P.T.O.

Q4) a) Describe the historical development of Cognitive Radio and explain two applications where Cognitive Radio technology is beneficial. **[9]**

b) Briefly explain the significance of IEEE 1900.x standards in Cognitive Radio terminology standardization. How do these standards contribute to in the field of Cognitive Radio? **[9]**

Q5) a) Describe a common architecture for spectrum sensing in Cognitive Radio networks and explain the importance of spectrum sensing in Cognitive Radio Networks? **[9]**

b) Explain the concept of the "Value of Perfect Information" in Cognitive Radio and How does perfect information enhance decision-making in a CRN. **[9]**

OR

Q6) a) Explain Publish-Subscribe architecture in CRNs and state its advantages. **[9]**

b) Explain how is the statistical characterization of node locations utilized in topology-aware CRN architectures. **[9]**

Q7) a) Explain Public Safety Communication - TETRA, C2000: **[8]**

b) With reference to Cognitive Radio - Write a note on **[8]**

i) System Spectral Efficiency

ii) Anti-jamming

OR

Q8) a) Briefly describe the characteristics of commercial wireless communication networks and How Cognitive Radio improves the performance of commercial wireless networks? **[8]**

b) Write a note on **[8]**

i) White space Assessment

ii) Application of cognitive radio in spectrum organization

Total No. of Questions : 8]

SEAT No. :

P-6598

[Total No. of Pages : 2

[6181]-157

B.E. (Electronics)

TESTING AND VERIFICATION FOR SOC DESIGN

(2019 Pattern) (Semester - VII) (404204C) (Elective - III)

Time : 2½ Hours] *[Max. Marks : 70*

Instructions to the candidates:

1) ***Answer Q1 or Q2, Q3 or Q4, Q5 or Q6, Q7 or Q8.***
2) ***Neat diagrams must be drawn wherever necessary.***
3) ***Figures to the right side indicate full marks.***
4) ***Use of calculator is allowed.***
5) ***Assume suitable data if necessary.***

Q1) a) With suitable diagram. Explain in detail about simulation for design verification. **[8]**

b) Explain following Testing techniques with respect to test equipment : **[9]**

i) Electrical parameter Testing

ii) Automatic Test equipment

iii) Chip testing technique

OR

Q2) a) Explain what action an event-driven true-value simulator will take when it Evaluates a zero-delay gate. **[8]**

b) Design algorithm for True Value Simulation with example. **[9]**

Q3) a) Explain the difference between structural and functional test. **[8]**

b) What are the benefits of combinational ATPG algorithm? Explain redundancy identification algorithm in detail with example. **[9]**

OR

Q4) a) Differentiate between testing methodology for Combinational and sequential circuits. **[8]**

b) What is Simulation-Based Sequential Circuit ATPG? Explain the GENETIC algorithm. **[9]**

P.T.O.

Q5) a) Explain Random Logic Built in self test (BIST). **[10]**

b) Explain the Ad-hoc DFT method that aim at improving the testability of stuck-at faults. **[8]**

OR

Q6) a) Why physical design of scan chain requires timing verification? What are several problem that should be checked while scan test? **[10]**

b) What are the importance of Digital DFT scanning methods? Explain In brief. **[8]**

Q7) a) What is memory BIST? Explain counter test technique for RAM BIST. **[10]**

b) Explain system configuration steps with boundary scan. **[8]**

OR

Q8) a) How does boundary scan work? Explain major modes of operation that boundary scan provide. **[10]**

b) Explain automated circular BIST approach with suitable diagram. **[8]**

Total No. of Questions : 8]

SEAT No. :

P-6599

[Total No. of Pages : 2

[6181]-158

B.E. (Eelectronics/E&TC)

JAVA SCRIPT

(2019 Pattern) (Semester - VII) (404184C) (Elective - III)

Time : 2½ Hours] ***[Max. Marks : 70***

Instructions to the candidates :

1) ***Answer Q.1 or Q.2, Q.3 or Q.4, Q.5 or Q.6, Q.7 or Q.8.***
2) ***Neat diagrams must be drawn wherever necessary.***
3) ***Figures to the right side indicate full marks.***
4) ***Use of calculator is allowed.***
5) ***Assume suitable data, if necessary.***

Q1) a) What is function? Explain with example how to pass and return parameters and arguments from called function to the calling function. **[6]**

b) What are Common properties and methods of object in JavaScript? **[6]**

c) Write a JavaScript program to pass the function by reference, perform addition of two objects inside the function and display the result in calling function. **[6]**

OR

Q2) a) What is Anonymous Functions in JavaScript? Explain its use with an example. **[6]**

b) Write a JavaScript program that will append an object to an array and will check if an object is an array data types. **[6]**

c) Explain data types in JavaScript? Differentiate between primitive and non-primitive. **[6]**

Q3) a) What is Regular Expression in JavaScript and explain the need of regular expressions. **[6]**

b) Explain Look ahead and Look behind concepts in JavaScript. **[6]**

c) Write a program to study string related built-in methods in JavaScript. **[5]**

OR

P.T.O.

Q4) a) Explain string methods for Regular Expression in JavaScript. **[6]**

b) Explain Character Classes in JavaScript. **[6]**

c) What are the limitations of Regular Expression? **[5]**

Q5) a) Define JavaScript object model and explain four distinct object models used in JavaScript. **[6]**

b) Explain event and event handler with an example. **[6]**

c) Write a JavaScript program to create a Home page of any website and change background color using. **[6]**

On mouse over event (mouse over)

On focus event (focus)

OR

Q6) a) Describe Document properties and methods with their HTML relationship. **[6]**

b) Differentiate between HTML and DHTML. **[6]**

c) Explain DOM and CSS Elements with example. **[6]**

Q7) a) Explain Various methods to control windows and list out window features. **[6]**

b) Explain the form handling and the terms form fields, validations, Dynamic forms, Form usability with an example. **[5]**

c) Design and implement a simple calculator using Java script for operations like **addition, multiplication, subtraction, division, square of a number**. **[6]**

OR

Q8) a) List and explain various popular windows events? **[6]**

b) What is frame and explain the HTML tags to create frames and how to change the properties of the frame. **[5]**

c) Create a student information Form to accept information like Name, Address, City, State, Gender, Mobile Number and email id. Perform validations for: **[6]**

- Correct Names
- Mobile Names
- Email I.D.'s

▽▽▽▽

Total No. of Questions : 8]

SEAT No. : ____

P-6600

[Total No. of Pages : 2

[6181]-159
B.E. (Electronics Engineering)
MOBILE COMMUNICATION
(2019 Pattern) (Semester - VII) (Elective-IV) (404205A)

Time : 2½ Hours] ***[Max. Marks : 70***

Instructions to the candidates :

1) ***Answer the Q1 Or Q2, Q3 or Q4, Q5 or Q6, Q7 or Q8.***
2) ***Neat diagram must be drawn wherever necessary.***
3) ***Figures to the right side indicate full marks.***
4) ***Use of Calculator is allowed.***
5) ***Assume suitable data if necessary.***

Q1) a) Explain in details lattice equalization technique. **[6]**

b) With neat diagram explain the operation of RAKE receiver. **[6]**

c) What is mean by diversity technique? Explain any two space diversity methods. **[8]**

OR

Q2) a) What is mean by Equalizers? Classify the equalizers. **[6]**

b) Differentiate between equalizer and diversity techniques. **[6]**

c) Explain with neat diagram DPSK transmitter & receiver. **[8]**

Q3) a) Explain in details call processing of Mobile originated call in AMPS. **[8]**

b) Draw and explain GSM Architecture in details. **[8]**

OR

Q4) a) What are the different logical channel in GSM & explain each channel. **[8]**

b) Explain in details AMPS radio interface with diagram. **[8]**

Q5) a) Explain the concept packet data transport process flow. Explain with diagram Mobile IP. **[8]**

b) Write short note on EVDV. **[8]**

OR

P.T.O.

Q6) a) Explain different radio network components use in CDMA 2000. **[8]**

b) Draw & explain GSM Time Hierarchy. **[8]**

Q7) a) With neat diagram explain network architecture for UMTS. **[6]**

b) Explain in details with diagram Circuit Switching method. **[6]**

c) Explain with diagram cellular packet-switched architecture. **[6]**

OR

Q8) a) Compare wirelessnetwork & fixed telephone network. **[6]**

b) Explain with figurepacket switching method. **[6]**

c) Draw and explain X.25 protocol in details. **[6]**



Total No. of Questions : 8]

SEAT No. :

P-6601

[Total No. of Pages : 2

[6181]-160

B.E. (Electronics Engineering)

EMBEDDED SYSTEMS

(2019 Pattern) (Semester - VII) (404205B) (Elective - IV)

Time : 2½ Hours] ***[Max. Marks : 70***

Instructions to the candidates:

1) ***Attempt Q.1 or Q.2, Q.3 or Q.4 Q.5 or Q.6, Q.7 or Q.8.***
2) ***Figures to the right indicate full marks.***

Q1) a) What is the purpose of shared resources in an operating system and how can they be accessed? **[8]**

b) Elaborate Interrupts: ISR, Latency, Response and Recovery, Memory management in Embedded System. **[9]**

OR

Q2) a) Explain Pre-emptive and non-preemptive Schedulers. **[8]**

b) Define the term ‘‘semaphore’’ and describe its use in synchronization. **[9]**

Q3) a) Explain Embedded Linux, overview, advantages, disadvantages. **[9]**

b) Differentiate QNX Neutrino, VxWorks, MicroC/OS. **[9]**

OR

Q4) a) Differentiate between OS and RTOS. **[9]**

b) What are different types of RTOS? Elaborate Selection criteria for RTOS. **[9]**

Q5) a) Elaborate use of Software tools for development of an Embedded System. **[8]**

b) List the different phases of the design cycle in the development of an embedded system. **[9]**

OR

P.T.O.

Q6) a) Explain Design and Co-design issues in the development Process of Embedded System. **[8]**

b) What are the functions of a logic analyzer and a scope in the development of an embedded system? **[9]**

Q7) a) Explain a case study of Coding steps for Smart Card. **[9]**

b) Elaborate Case study of Coding steps for transmission of stream on a TCP/IP Network using RTOS. **[9]**

OR

Q8) a) Explain Case study of Coding steps for Adaptive Cruise Control System in a car. **[9]**

b) Elaborate Case study of Coding steps for an Automatic Chocolate Vending Machine. **[9]**

⌘⌘⌘

Total No. of Questions : 8]

SEAT No. :

P-8781

[Total No. of Pages : 2

[6181]-163

B.E. (Electronics/Electronics and Telecommunication Engineering)

SMART ANTENNAS

(2019 Pattern) (Semester - VII) (404185-E) (Elective - IV)

Time : 2½ Hours] ***[Max. Marks : 70***

Instructions to the candidates:

1) ***Answer Q1 or Q2, Q3 or Q4, Q5 or Q6, Q7 or Q8.***
2) ***Figures to the right side indicate full marks.***
3) ***Assume suitable data, if necessary.***

Q1) a) What are the features of a smart antenna system? Write benefits of smart antennas. Also mention few applications of smart antennas in wireless systems. **[6]**

b) Explain the following smart antenna systems in detail : **[6]**

i) Switch Beam System ii) Adaptive Array System

c) With the help of block diagram explain components present in smart antenna system. **[6]**

OR

Q2) a) Explain following terms related to smart antenna : **[6]**

i) Beam Forming

ii) Beam Steering

iii) Degree of Freedom

b) Draw and explain the transmitter and receiver architecture of smart antenna. **[6]**

c) Explain in detail about mutual coupling effect of smart antenna. **[6]**

Q3) a) Explain in detail linear prediction method for direction of arrival Estimation (DOA). **[6]**

b) Explain Maximum Likelihood method used for DOA estimation. **[5]**

c) Explain the following Multiple Signal Classification (MUSIC) algorithms in detail : **[6]**

i) Root Music ii) Cyclic Music

P.T.O.

OR

Q4) a) Explain in detail Maximum entropy method for DOA. **[6]**

b) Write short note on ESPRIT algorithm, **[5]**

c) Explain Eigen Structure method used for DOA estimation. **[6]**

Q5) a) With the help of block diagram explain concept of Beam Forming in Smart Antenna Systems. **[6]**

b) List out & explain any one adaptive algorithm for Beam Forming. **[6]**

c) Write short note on Minimum Mean Square Error (MMSE) method for Beam Forming. **[6]**

OR

Q6) a) Explain in detail Direct Matrix Inversion (DMI). **[6]**

b) With the help of block diagram explain Multiple Sidelobe Canceler. **[6]**

c) Write short note on Classical Beam former used in smart antenna system. **[6]**

Q7) a) Explain with block diagram Multiple Input Multiple Output Communication System. **[6]**

b) Explain the concept of massive MIMO. Also list out applications of massive MIMO. **[5]**

c) Explain different MIMO diversity methods and formats. **[6]**

OR

Q8) a) Explain following MIMO configurations in detail : **[6]**

i) SISO ii) MISO

b) Explain with block diagram Hybrid antenna array architecture for mm wave. **[6]**

c) Compare between MIMO and massive MIMO system. **[5]**



Total No. of Questions : 8]

SEAT No. :

P 6602

[Total No. of Pages :2

[6181] -164
B.E. (Electronics)
Process instrumentation
(2019 Pattern) (Semester-VIII) (404210)

Time : 2½ Hours] *[Max. Marks : 70*

Instructions to the candidates:

1) ***Answer Q1 or Q2, Q3 or Q4, Q5 or Q6, Q7 or Q8.***
2) ***Neat diagrams must be drawn wherever necessary.***
3) ***Figures to the right indicate full marks.***
4) ***Assume suitable data if necessary.***
5) ***Use of non-programmable scientific calculator is allowed.***

Q1) a) A proportional derivative controller has a 0.4 to 2.0 V input measurement range, a 0 to 5V output, Kp = 5% per% and Kd = 0.08% per (%/min). The period of the fastest expected signal change is 1.5 sec. Implement this controller with an op-amp circuit. **[9]**

b) State the equation and Explain OP-AMP realization of P+I control mode with neat circuit diagram. **[8]**

OR

Q2) a) In the Ziegler-Nichols method, the critical gain was found to be 4.2, and the critical period was 2.21 min. find the standard settings for **[9]**

i) Proportional mode control

ii) PI control

iii) PID control.

b) Explain Open-Loop Transient Response Method of process loop tuning with neat graph. State equations for three mode controller. **[8]**

Q3) a) Explain the concept of feedforward control scheme with a neat block diagram. **[9]**

b) Explain Cascade control with block diagram. Give suitable example. **[8]**

OR

Q4) a) Explain with suitable example the split range control scheme. **[9]**

b) Explain combined Feedback and Feed-forward control scheme for steam heated heat exchanger. **[8]**

P.T.O.

Q5) a) What is Adaptive control? Explain Programmed or Scheduled Adaptive Control System. **[9]**

b) Explain Model Predictive Control (MPC) in detail. **[9]**

OR

Q6) a) Explain Model reference Adaptive Control (MRAC) in detail. **[9]**

b) Explain internal Model Control (IMC) in detail. **[9]**

Q7) a) Explain different measures to ensure safety in process plants/process industry. **[9]**

b) Explain the sequence of design steps for managing the design process. **[9]**

OR

Q8) a) Explain how control structure is selected for a particular process control application. **[9]**

b) What is process operability? Expalin important factors that influence process operability. **[9]**



Total No. of Questions : 8]

SEAT No. :

P6603

[Total No. of Pages : 2

[6181]-165
B.E. (Electronic Engineering)
BIOMEDICAL ELECTRONICS
(2019 Pattern) (Semester - VIII) (Elective - V) (404211 A)

Time : 2½ Hours] *[Max. Marks : 70*

Instructions to the candidates:

1) ***Answer Q.1 or Q.2, Q.3 or Q.4, Q.5 or Q.6, Q.7 or Q.8.***
2) ***Figures to the right indicate full marks.***
3) ***Assume suitable data, if necessary.***

Q1) a) Draw and explain block diagram of EEG Machine. **[6]**

b) Draw and explain 10-20 electrode system for EEG recording. **[6]**

c) Draw and explain block diagram of EMG Machine. **[6]**

OR

Q2) a) Draw and explain 10-20 electrode system for EEG recording. **[6]**

b) List various EEG waves with their frequency. **[6]**

c) What are the different components of central nervous system? Explain in detail. **[6]**

Q3) a) Describe operation of DC defibrillator with circuit diagram and wave form? **[9]**

b) Write short note on finger plethysmography and echocardiography? **[8]**

OR

Q4) a) Draw the block diagram central monitoring system. Explain it in detail. **[9]**

b) Explain electromagnetic blood flow meter with its salient features. **[8]**

Q5) a) Name different methods for blood cell counting. Explain coulter counters in detail. **[9]**

b) Describe the working of Flame Photometer. **[8]**

OR

P.T.O.

Q6) a) Write short note on colorimeter. **[9]**

b) Discuss various issue of noise pollution around Hospital. **[8]**

Q7) a) Write a working principle of MRI. How does an MRI scanner work? **[6]**

b) Explain CT scanner working principle and scanning system. **[6]**

c) Explain Telemetry System for Biomedical application in detail? **[6]**

OR

Q8) a) Explain operation of X-ray machine with help of neat block diagram. **[6]**

b) Give advantages & disadvantages of LASER in medicine. **[6]**

c) Explain application of Telemetry in patient caring. **[6]**



Total No. of Questions : 8]

SEAT No. :

P6604

[Total No. of Pages : 2

[6181]-166
B.E. (Electronics)
ARTIFICIAL INTELLIGENCE AND NEURAL NETWORK
(2019 Pattern) (Elective - V) (Semester - VIII) (404211 B)

Time : 2½ Hours] *[Max. Marks : 70*

Instructions to the candidates:

1) ***Answer Q.1 or Q.2, Q.3 or Q.4, Q.5 or Q.6, Q.7 or Q.8.***
2) ***Neat diagrams must be drawn whenever necessary.***
3) ***Assume suitable data, if necessary.***
4) ***Use of non-programmable scientific calculator is allowed.***

Q1) a) With the help of neat diagram explain Back Propagation Networks. **[6]**

b) Explain Normalization technique in Deep learning. **[6]**

c) Explain Artificial Neural Network in detail. **[6]**

OR

Q2) a) Describe Overfitting and Under fitting in deep feed forward networks. **[6]**

b) Explain Regularization technique in Deep learning. **[6]**

c) Explain Vanishing Gradient Problem in Deep feed forward network. **[6]**

Q3) a) Explain Stride and Padding in Convolutional Neural Network. **[6]**

b) Write short note on Sigmoid Function, ReLU (Rectified Linear Unit). **[6]**

c) Describe Classification in Convolutional Neural Network. **[6]**

OR

Q4) a) Draw and explain Architecture of Convolutional Neural Network. **[6]**

b) Explain application of Convolutional Neural Network in detail. **[6]**

c) Describe Pooling layer in Convolutional Neural Network. **[6]**

Q5) a) Draw and explain Architecture of Recurrent Neural Network. **[9]**

b) Describe Bidirectional Recurrent Neural Network (BRNN) **[8]**

OR

P.T.O.

Q6) a) Describe Long short term Memory (LSTM) **[9]**

b) Explain Two issues of Standard Recurrent Neural Network. **[8]**

Q7) a) Explain How to Build and Train of Convolutional Neural Network in python. **[9]**

b) Describe Deep learning application in Agriculture. **[8]**

OR

Q8) a) Explain application of Deep learning in detail. **[9]**

b) Describe Handwritten Digit Recognition using CNN. **[8]**

Total No. of Questions : 8]

SEAT No. :

P6605

[Total No. of Pages : 2

[6181]-167
B.E. (Electronics/E & T.C)
ANDROID DEVELOPMENT
(2019 Pattern) (Elective - V) (Semester - VIII) (404191 C)

Time : 2½ Hours] *[Max. Marks : 70*

Instructions to the candidates:

1) ***Answer Q.1 or Q.2, Q.3 or Q.4, Q.5 or Q.6, Q.7 or Q.8.***
2) ***Neat diagrams must be drawn whenever necessary.***
3) ***Figures to the right side indicate full marks.***
4) ***Use of a Calculator is allowed.***
5) ***Assume suitable data if necessary.***

Q1) a) Explain basic building blocks of Android. **[8]**

b) Briefly explain Android API levels. **[6]**

c) What is Dalvik Virtual Machine. **[4]**

OR

Q2) a) Explain components of communication in Android. **[8]**

b) List out UI Components. **[4]**

c) Explain following terms: **[6]**

i) Assets

ii) Layouts

iii) Drawable Resource

Q3) a) What are activities and explain, what is Lifecycle? **[7]**

b) Explain following. **[10]**

i) Components of a screen

ii) Adapting to Display Orientation

OR

Q4) a) What is Intents? Explain Linking activities. **[7]**

b) Explain following **[10]**

i) Fragment Lifecycle

ii) Split / Multi screen Activities.

P.T.O.

Q5) a) Explain following user interfaces. **[10]**

i) Text view

ii) Progress bar View

b) Explain Animation in Android **[8]**

OR

Q6) a) Briefly explain Android Menus. **[10]**

b) Explain Graphics in Android. **[8]**

Q7) a) Explain Storage in Android. **[7]**

b) Write a short note on SQLite. **[10]**

OR

Q8) a) Explain database in Android. **[7]**

b) Short note on **[10]**

i) Google Maps

ii) Monitoring a Location



Total No. of Questions : 8] **SEAT No. :**

P6606 **[Total No. of Pages : 2**

[6181]-168
B.E. (Electronics Engineering)
AUDIO VIDEO ENGINEERING
(2019 Pattern) (Elective - V) (Semester - VIII) (404211 C)

Time : 2½ Hours] ***[Max. Marks : 70***

Instructions to the candidates:

1) ***Answers the Q.1 or Q.2, Q.3 or Q.4, Q.5 or Q.6, Q.7 or Q.8.***
2) ***Neat diagrams must be drawn whenever necessary.***
3) ***Figures to the right indicate full marks.***
4) ***Use of logarithmic tables slide rule, Electronic pocket Calculator is allowed.***
5) ***Assume suitable data, if necessary.***

Q1) a) Compare 4K and 8K standers of UHDTV. **[8]**

b) Write a short note on Camcorder and Webcam. **[9]**

OR

Q2) a) Explain 3D TV in detail. **[8]**

b) Draw and explain block diagram of smart TV. **[9]**

Q3) a) Explain MPEG-2 video compression standards in detail. **[6]**

b) Write a short note on video streaming. **[6]**

c) Draw and explain block diagram of DTH. **[6]**

OR

Q4) a) Explain with block diagram of digital TV Transmitter. **[6]**

b) Compare EDTV, SDTV, HDTV. **[6]**

c) Explain MAC receiver of digital TV with suitable diagram. **[6]**

Q5) a) Explain working principle of cone type loudspeaker with neat diagram. **[8]**

b) Draw and explain the block diagram of PA system. **[9]**

OR

P.T.O.

Q6) a) Explain PA system installation plan for an auditorium having large capacity. **[8]**

b) Explain with neat diagram working of condenser microphone? State its applications. **[9]**

Q7) a) Draw and explain the block diagram of a CD player. **[6]**

b) Compare CD, DVD and Blue Ray DVD. **[6]**

c) Write a short note on MP3 Player. **[6]**

OR

Q8) a) Explain with neat block diagram and working of DVD Player. What are the various output connecters available for DVD? Enlist the capacities of DVD available in market. **[9]**

b) With the help of neat diagram explain the variable density method of recording of sound on films. **[9]**

Total No. of Questions : 8]

SEAT No. : ____

P6607

[Total No. of Pages : 2

[6181]-169

B.E. (Electronics)

AUTOMOTIVE ELECTRONICS

(2019 Pattern) (Semester-VIII) (Elective-V) (404211D)

Time : 2½ Hours] ***[Max. Marks : 70***

Instructions to the candidates:

1) ***Solve Q1 or Q.2, Q.3 or Q.4, Q.5 or Q.6, Q.7 or Q.8.***
2) ***Neat diagrams must be drawn wherever necessary.***
3) ***Assume suitable data if necessary.***

Q1) a) Compare between 16 bit and 32 bit microcontrollers through automotive perspective & explain how interrupts work in PIC microcontroller. **[10]**

b) Explain the process of engine calibration in detail. **[8]**

OR

Q2) a) Explain the selection criteria of microcontrollers in automotive domain, why automotive grade processors are preferred in automobiles. **[10]**

b) State the advantages and limitations of multicore architecture in ECUs.**[8]**

Q3) a) Write a note about wireless LAN standards and their applications in automobiles. **[10]**

b) What way Flex Ray is superior to CAN? State key features of it. **[8]**

OR

Q4) a) With respect to CAN explain error handling and protocol extension.**[10]**

b) Compare various types of automotive buses. **[8]**

Q5) a) Comment on anti-jerking control for passenger cars. Draw standard vehicle driver road control loop. **[10]**

b) Discuss superset of variable sensed in engine control system. **[8]**

OR

P.T.O.

Q6) a) State and explain reasons of using model based development in automotive sector. **[10]**

b) Compare analog & digital cruise control system. **[8]**

Q7) a) With neat sketch explain electric window control circuit & door lock circuit. **[8]**

b) Explain various types of diagnostics techniques. Enlist various diagnostic tools & equipment. **[8]**

OR

Q8) a) Explain necessity of functional safety. Compare active safety & passive safety. **[8]**

b) What is on-board Diagnostics? Explain operation cycles in on-board diagnostics. **[8]**

● ● ●

Total No. of Questions : 8]

SEAT No. :

P6608

[Total No. of Pages : 2

[6181]-170
B.E. (Electronics Engineering)
RENEWABLE ENERGY SYSTEM AND DSM
(2019 Pattern) (Semester - VIII) (Elective - VI) (404212 A)

Time : 2½ Hours] *[Max. Marks : 70*

Instructions to the candidates:

1) ***Solve Q.1 or Q.2, Q.3 or Q.4, Q.5 or Q.6, Q.7 or Q.8.***
2) ***Figures to the right indicate full marks.***
3) ***Assume suitable data, if necessary.***

Q1) a) Draw and explain characteristics of Power vs Speed and TSR. Explain Maximum power operation of wind power system. **[6]**

b) List the various types of Wind Energy Conversion System (WECS). Explain Hybrid WECS System in detail. **[6]**

c) Compare fixed speed and variable speed wind power system. **[6]**

OR

Q2) a) Explain the principle of wind energy conversion system. State the basic Components of WECS and their role in WECS. **[6]**

b) Explain following mechanical controls used in Wind Energy **[6]**

Conversion System (WECS)

i) Pitch Control

ii) Yaw Control

c) Enlist the different types of wind generators. Explain working of any one in detail. **[6]**

Q3) a) Explain Municipal Solid Waste Management in Detail. **[8]**

b) With suitable sketch explain an anaerobic digestion method of producing biogas from resources **[9]**

OR

Q4) a) Explain the operation of Biofuel Production with the help of suitable schematic diagram.fermentation process. **[9]**

b) What are the biomass conversion technologies? Explain any one in detail. **[8]**

P.T.O.

Q5) a) Write three important components of a tidal power plant. Briefly explain the Kaplan type turbine with working range of water head. **[9]**

b) Discuss the various ways of geothermal power generation. **[8]**

OR

Q6) a) Describe the closed cycle Ocean Thermal Energy Conversion system (OTEC) and mention its advantages and limitations. **[9]**

b) Write short notes on: **[8]**

i) Tidal energy

ii) Wave energy

Q7) a) What is DSM? Explain various components of DSM and their role. **[6]**

b) Explain Technology options for DSM in **[6]**

i) Lightning

ii) Space cooling (Ceiling Fan, AC system)

iii) Refrigeration and water cooling

c) Explain architecture for DR implementation, Energy management system. **[6]**

OR

Q8) a) Explain various load shape curves with suitable graphical representation. **[6]**

b) What is Demand Response? Classify various DR options. **[6]**

c) What is the role of communication infrastructure? Explain MDMS, DRAS (Server & client) **[6]**

Total No. of Questions : 8] **SEAT No. :**

P6609 **[Total No. of Pages : 2**

[6181]-171
B.E. (Electronics Engineering)
WIRELESS SENSOR NETWORK
(2019 Pattern) (Semester - VIII) (404212 B) (Elective - VI)

Time : 2½ Hours] ***[Max. Marks : 70***

Instructions to the candidates:

1) ***Solve Q.1 or Q.2, Q.3 or Q.4, Q5 or Q6, Q.7 or Q.8.***
2) ***Figures to the right indicate full marks.***
3) ***Assume suitable data, if necessary.***

Q1) a) List key features of Wibree protocol/standard. State advantages, disadvantages of Wibree protocol/standard. **[6]**

b) Explain architecture of Wireless HART protocol/standard. **[6]**

c) Write a short note on: **[8]**

i) IEEE802.15.4 Low rate WPAN

ii) 6LoWPAN

OR

Q2) a) State key features of Bluetooth Low Energy (BLE) protocol. State advantages, disadvantages of Bluetooth Low Energy (BLE) protocol.**[6]**

b) Draw and explain cross layer protocol stack architecture. **[6]**

c) Write short note on: **[8]**

i) Z - Wave Protocol

ii) ISA 100.11 a protocol/standard

Q3) a) What is localization in wireless sensor network? Explain types of location information in WSN. Explain localization precision and localization accuracy. **[8]**

b) Explain the proximity schemes and ranging schemes for localization in wireless sensor networks. **[8]**

OR

P.T.O.

Q4) a) What is routing in wireless sensor network? Explain full-network broadcast routing protocol with flow diagram. **[8]**

b) Explain collection tree routing protocol and Zigbee routing protocol in wireless sensor networks. **[8]**

Q5) a) With the help of diagram explain random clustering technique in WSN. **[8]**

b) Explain defensive measures for attacks in physical layer and data link layer in WSN. **[8]**

OR

Q6) a) Explain goal oriented attacks and layer oriented attacks in wireless sensor networks. **[8]**

b) Explain Statistical analysis in wireless sensor network. Explain compressive sampling in statistical analysis in wireless sensor network. **[8]**

Q7) a) What is deployment in wireless sensor network. Explain early WSN deployment with example. **[6]**

b) Explain the Bottom-up design process of deployment of WSN. **[6]**

c) Explain link/path problems and topology problems in deployments of wireless sensor network. **[6]**

OR

Q8) a) Explain semantic problems and global problems in deployments of wireless sensor network. **[6]**

b) Explain the Top-down design process of deployment of WSN. **[6]**

c) Explain early WSN deployments in brief. Explain the requirement analysis in WSN. **[6]**

Total No. of Questions : 8]

SEAT No. :

P6610

[Total No. of Pages : 2

[6181]-172
B.E. (Eletronics /E& TC)
REMOTE SENSING
(2019 Pattern) (Semester - VIII) (Elective - VI) (404192C) (Theory)

Time : 2½ Hours] ***[Max. Marks : 70***

Instructions to the candidates:

1) ***Solve Q.1 or Q.2, Q.3 or Q.4, Q5 or Q6, Q.7 or Q.8.***
2) ***Figures to the right indicate full marks.***

Q1) a) Explain the Geometric corrections and atmospheric corrections and how they are removed during the pre-processing stage of satellite images. **[8]**

b) Explain various value added products offered by the space agencies to the end user for satellite data processing. **[8]**

OR

Q2) a) Write short notes on : **[8]**

i) True Color Composite

ii) False Color Composite

b) Describe the significance of NDVI. Calculate NDVI of a plant with NIR = 0.50 and RED = 0.08 and determine whether the plant is healthy or stressed. **[8]**

Q3) a) Differentiate between active and passive microwave remote sensing. **[8]**

b) What is SAR and SLAR. Brief about the characteristics and interpretation of SAR data. **[10]**

OR

Q4) a) Explain Radar equation and determine ground based resolution and azimuth resolution of SLAR with suitable illustrations. **[8]**

b) Explain LIDAR concept and its key characteristics with applications. **[10]**

P.T.O.

Q5) a) Name India's own navigation system and its key features and application areas with suitable diagram of satellite positioning. **[10]**

b) Explain the principles of satellite positioing and GNSS orbits. **[8]**

OR

Q6) a) What is an augmentation system? Differentiate between Space based and Ground based augmentation system. **[10]**

b) Write short notes on LBS with suitable real life examples. **[8]**

Q7) a) Brief the application of remote sensing in Landuse and Land cover with use cases and methodology. **[8]**

b) Brief the application of remote sensing in water resource management with use ceses and methodology. **[10]**

OR

Q8) a) Brief the application of remote sensing in precision agriculture with use cases and methodology. **[10]**

b) Brief the application of remote sensing in Urban planning and management with use cases and methodology. **[8]**

Total No. of Questions : 8]

SEAT No. :

P-6611

[Total No. of Pages : 2

[6181]-173

B.E. (Electronics)/(E & TC)

DIGITAL MARKETING

(2019 Pattern) (Semester - VIII) (Elective - VI) (404192D)

Time : 2½ Hours] ***[Max. Marks : 70***

Instructions to the candidates:

1) ***Answer Q. No. 1 or 2, Q.No. 3 or 4, Q5 or Q6, Q7 or Q8.***
2) ***Neat diagrams to be drawn wherever necessary.***
3) ***Figures to the right indicate full marks.***
4) ***Use of calculator is allowed.***
5) ***Assume suitable data if necessary.***

Q1) a) Explain the importance of AdWords and Google Ads in SEM and how they enable businesses to reach their target audience effectively. **[9]**

b) Explain the concept of PPC (Pay-Per-Click) cost formula in search engine marketing and its significance in calculating campaign expenses. **[8]**

OR

Q2) a) Describe the steps involved in setting up the Google Analytics tracking code on a website or blog to start collecting data for SEM analysis. **[9]**

b) State the difference between SEO and SEM. **[8]**

Q3) a) Write short notes on Facebook app and shopping marketing? **[9]**

b) Explain the different social media platforms for marketing & the development data driven audience and campaign insight? **[8]**

OR

Q4) a) Explain the process of creating your first ad on Facebook for social media marketing and its significance for businesses? **[9]**

b) List out the benefits of social media marketing. **[8]**

P.T.O.

Q5) a) List out different types of Linkedln advertising and explain any one in detail. **[9]**

b) What are the different social media platforms. Explain any one in detail. **[9]**

OR

Q6) a) Write down the steps for email campaigning through HTML. **[9]**

b) Discuss the benefits of importing email lists into social media platforms for targeted advertising and audience segmentation. **[9]**

Q7) a) Discuss role of chatbots in digital marketing and theirimpact on customer engagement. **[9]**

b) Discuss the ethical consideration and potential challenges in affiliate marketing, such as fraud, compliance and maintaining transparency with consumers. **[9]**

OR

Q8) a) What are podcasts? Explain the types of podcasts in detail. **[9]**

b) Discuss the process of obtaining Google verified listing and the necessary steps involved. **[9]**

Total No. of Questions : 8]

SEAT No. :

P-6612

[Total No. of Pages : 3

[6181]-175

B.E. (E & TC)

RADIATION AND MICROWAVE THEORY

(2019 Pattern) (Semester - VII) (404181)

Time : 2½ Hours] *[Max. Marks : 70*

Instructions to the candidates:

1) ***Answer Q1 or Q2, Q3 or Q4, Q5 or Q6, Q7 or Q8.***
2) ***Neat diagrams must be drawn wherever necessary.***
3) ***Figures to the right carries full marks.***
4) ***Assume suitable data, if necessary.***

Q1) a) State the properties of S-matrix and derive S matrix for H plane Tee. **[6]**

b) Explain the operating principle of two hole directional coupler with its S-matrix. **[6]**

c) An isolator has an insertion loss of 0.5 dB and an isolation of 30 dB. Determine the scattering matrix of the isolator if the isolated ports are perfectly matched to the junction. **[6]**

OR

Q2) a) Explain how Magic Tee is used for impedance measurement. **[6]**

b) Explain in brief the working principle of a circulator. **[6]**

c) A symmetric directional coupler with infinite directivity and a forward attenuation of 20Db is used to monitor the power delivered to a load Z_L in below Fig. 4.27. Bolometer 1 introduces a VSWR of 2.0 on arm4; bolometer 2 is matched to arm 3. If bolometer 1 reads 8mW and bolometer 2 reads 2 mW, find:(a) the amount of power dissipated in the load Z_L; (b) the VSWR on arm 2. **[6]**

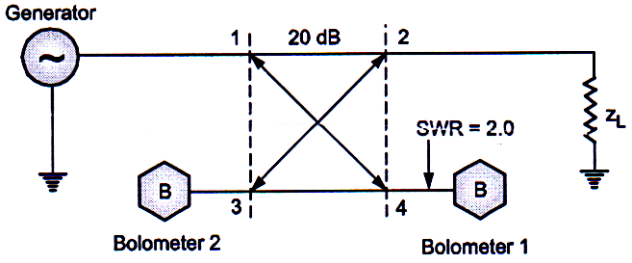

P.T.O.

Q3) a) Explain a TWT amplifier. Which type of slow wave structure is used in TWTA and Why? **[6]**

b) How bunching is achieved in cavity Magnetron. Explain the phase focusing effect. **[6]**

c) Distinguish between TWTA and Klystron Tube. **[6]**

OR

Q4) a) With the help of suitable diagram explain the operating principle of single cavity Reflex Klystron. **[6]**

b) Explain construction, operation of Two Cavity Klystron amplifier. **[6]**

c) Give the limitation of conventional tubes at microwave frequencies? **[6]**

Q5) a) Explain the principle of operation, construction, characteristics of Microwave transistors. **[6]**

b) Explain the operation of PIN diode as a) Amplitude Modulator b) Switch. **[6]**

c) Explain the constructional details and VI characteristics of Schottky barrier diode. **[5]**

OR

Q6) a) Explain the working principle of Varactor diode **[6]**

b) Explain the following modes in the Gunn Oscillator : **[6]**

i) Transit time domain mode.

ii) Delayed or Inhibited domain mode.

iii) Quenched domain mode.

iv) Limited space charge. Accumulation LSA mode.

c) Write a short note on IMPATT diode. **[5]**

Q7) a) Differentiate between Satellite and Terrestrial Communication System. **[6]**

b) Calculate the maximum range of a radar system which 3 cm with a peak pulse power of 600 kW if its antenna is 5 m^2, minimum detectable signal is 10^{-13} W and the radar cross sectional area of the target is 20 m^2. **[6]**

c) Write a note on radiation hazard levels for personnel. **[5]**

OR

Q8) a) In light on the Industrial applications of microwaves : Microwave Heating. **[6]**

b) Explain reflectometer method for measurement of impedance. **[6]**

c) How Calorimeter technique is used for measurement of Medium power at Microwave frequency. **[5]**



Total No. of Questions : 8]

SEAT No. : ____

P6613

[Total No. of Pages : 2

[6181]-176

B.E. (Electronics & Telecommunication Engineering)
VLSI DESIGN & TECHNOLOGY
(2019 Pattern) (Semester-VII) (404182)

Time : 2½ Hours] ***[Max. Marks : 70***

Instructions to the candidates:

1) ***Answer Q.1 or Q.2, Q.3 or Q.4, Q.5 or Q.6, Q.7 or Q.8.***
2) ***Neat diagrams must be drawn wherever necessary.***
3) ***Figures to the right indicate full marks.***
4) ***Use of electronic pocket calculator is allowed.***
5) ***Assume suitable data, if necessary.***

Q1) a) Distinguish between FPGA and CPLD. **[6]**

b) Explain with diagram SRAM and Anti-fuse programming techniques used in FPGA? **[6]**

c) Write short note on VLSI Design flow with respect to PLDs. **[6]**

OR

Q2) a) Write short note on CPLD. **[6]**

b) Explain synthesis and simulation tools in brief. **[6]**

c) Give typical features and specifications of FPGA. **[6]**

Q3) a) Draw and explain CMOS Inverter transfer characteristics with all regions in detail. **[7]**

b) Draw CMOS logic for $Y = \overline{AB + CD + E}$. Calculate W/L ratio for NMOS and PMOS & area needed on the chip. **[10]**

OR

Q4) Write short note on:

a) Body effect. **[4]**

b) Channel length modulation. **[4]**

c) Draw NAND, NOR, AND, OR gates using CMOS. **[9]**

P.T.O.

Q5) a) Explain Antenna effect. **[5]**

b) Explain Electro migration effect in detail. **[5]**

c) Draw stick diagram of CMOS inverter, 2 input NAND and NOR gates. **[8]**

OR

Q6) a) Explain LAMBDA rules used for CMOS layout design. **[6]**

b) Write short note on Drain punch through. **[6]**

c) Write SPICE code for CMOS invertor for AC analysis. **[6]**

Q7) a) Write short note need of design for Testability & Adhoc DFT techniques. **[8]**

b) Explain stuck at fault models with suitable examples. **[9]**

OR

Q8) a) Write short note on BIST with block diagram. **[8]**

b) Explain JTAG boundary scan method for testing. **[9]**



Total No. of Questions : 8]

SEAT No. :

P6614

[Total No. of Pages : 2

[6181]-177
B.E. (E & TC)
CLOUD COMPUTING
(2019 Pattern) (End-Semester) (Semester - VII) (404183)

Time : 2½ Hours] *[Max. Marks : 70*

Instructions to the candidates:

1) ***Answer Q1 or Q2, Q3 or Q4, Q5 or Q6, Q7 or Q8.***
2) ***Neat diagrams must be drawn wherever necessary.***
3) ***Figures to the right carry full marks.***
4) ***Assume suitable data, if necessary.***

Q1) a) Describe the structure and types of virtualization. **[6]**

b) Explain in brief Virtual Clusters. **[6]**

c) Write short notes on: **[6]**

i) Desktop virtualization.

ii) Network virtualization.

OR

Q2) a) Describe the components of virtual machine. **[6]**

b) Describe the various methods of implementing storage virtualization. **[6]**

c) Compare Type I and Type II hypervisors with the help of diagram. **[6]**

Q3) a) Explain the design principles of cloud computing services. **[6]**

b) Draw and explain cloud computing life cycle. **[6]**

c) Enlist the elements of cloud security architecture with suitable diagram. **[5]**

OR

Q4) a) Elaborate the cloud computing reference architecture. **[6]**

b) Explain the types and functions of firewall. **[6]**

c) Describe the security challenges for cloud service customers. **[5]**

P.T.O.

Q5) a) Explain the steps to create and manage associated objects for Amazon S3 Bucket. **[6]**

b) Explain Google App Engine application life cycle. **[6]**

c) Explain the different cost models in cloud computing. **[6]**

OR

Q6) a) Describe Amazon EC2 cloud in brief considering following points: **[6]**

i) Amazon Machine Image

ii) Amazon Cloud Watch

b) Write short on Microsoft Azure. **[6]**

c) Explain different services provided by Google Cloud Platform. **[6]**

Q7) a) Draw and explain the architecture of the IoT. **[6]**

b) Define Distributed Computing and discuss the different types of Distributed System. **[6]**

c) Explain any two enabling technologies for IoT. **[5]**

OR

Q8) a) Explain any three innovative applications of IoT. **[6]**

b) Differentiate between Distributed Computing and Cloud Computing. **[6]**

c) Write short note on: Online social and Professional Networking. **[5]**



Total No. of Questions : 8]

SEAT No. : ____

P-6615

[Total No. of Pages : 2

[6181]-178
B.E. (Electronics and Telecommunication)
PLC, SCADA AND AUTOMATION
(2019 Pattern) (Semester-VII) (404184 B) (Elective - III)

Time : 2½ Hours] ***[Max. Marks : 70***

Instructions to the candidates :

1) ***Attempt Q.1 or Q.2, Q.3 or Q.4, Q.5 or Q.6, Q.7 or Q.8.***
2) ***Neat diagrams must be drawn wherever necessary.***
3) ***Figures to the right indicate full marks.***
4) ***Assume suitable data, if necessary.***

Q1) a) List and explain different types of programming languages used for PLC. **[7]**

b) Draw the ladder diagram for the following function table - **[7]**

I1, I2, I3-inputs

Cl, C2 outputs

I1	I2	I3	Cl	C2
0	0	0	0	0
0	0	1	1	0
0	1	0	1	0
0	1	1	0	1
1	0	0	1	0
1	0	1	0	1
1	1	0	0	1
1	1	1	1	1

c) Explain the functions in a Timer. **[4]**

OR

Q2) a) Give one example for the use of PLC Counter & and draw the related ladder diagram. **[7]**

b) Draw and explain bottle filling plant. Construct ladder diagram for the same. **[7]**

c) Explain data handling instructions in PLC Programming with suitable example. **[4]**

P.T.O.

Q3) a) Explain functional levels of a manufacturing control operation with reference to SCADA. **[7]**

b) Explain SCADA system components. **[7]**

c) Explain functions of RTU. **[4]**

OR

Q4) a) Define SCADA. State applications of SCADA. Write desirable properties of SCADA. **[9]**

b) Explain how SCADA system is used in Petroleum Refining process. **[9]**

Q5) a) Explain the application of DCS in "Water Treatment Plant." **[7]**

b) What factors makes DCS different from other control systems? Justify. **[5]**

c) State the concept of DCS system. **[5]**

OR

Q6) a) Explain DCS architecture in detail. **[9]**

b) Compare PLC, SCADA and DCS. **[8]**

Q7) a) Explain advantages & disadvantages of CNC machine. **[7]**

b) State the classifications of CNC machine. **[5]**

c) Explain in brief: Foundation Fieldbus. **[5]**

OR

Q8) a) Explain CNC machine with the help of block diagram. **[8]**

b) Explain DeviceNet in detail. **[4]**

c) What do you understand by Industry 4.0 Standard? **[5]**

Total No. of Questions : 8]

SEAT No. :

P-6616

[Total No. of Pages : 2

[6181]-179

B.E. (E & TC)

EMBEDDED SYSTEM & RTOS

(2019 Pattern) (Semester - VII) (Elective - III) (404184(D))

Time : 2½ Hours] ***[Max. Marks : 70***

Instructions to the candidates:

1) ***Attempt Q1 or Q2, Q3 or Q4, Q5 or Q6, Q7 or Q8.***
2) ***Neat diagrams must be drawn wherever necessary.***
3) ***Figures to the right indicate full marks.***
4) ***Assume suitable data if necessary.***

Q1) a) State the features of μCOS-II. Explain with state diagram the states of a task in RTOS. **[8]**

b) What is intertask communication in RTOS? Explain the use of semaphore for event signaling using following functions:

OS SemPost() and OSSemPend(). **[8]**

OR

Q2) a) Explain the time management functions in RTOS. What is clock tick? **[8]**

b) Explain the following μC/OS-II functions **[8]**

i) OSTaskCreate()
ii) OSTimeDel()
iii) OSTaskChangePrio()
iv) OSTaskResume()

Q3) a) Explain in detail the concept of Embedded Linux Distributions. Explain the various binary utilities. **[9]**

b) Draw a typical embedded Linux development set up and explain how it works. **[9]**

OR

Q4) a) Differentiate between BIOS and Boot-loader. **[9]**

b) What do meant by cross development environment? Explain in detail the role of GNU debugger. **[9]**

P.T.O.

Q5) a) What is Linux kernel configuration? Explain the steps in Linux kernel configuration. **[9]**

b) What is role of a boot-loader? What are its challenges? **[9]**

OR

Q6) a) Explain the file structure used in Embedded Linux. **[9]**

b) Explain need of device drivers and different parts in device driver. Which are different types of device driver? **[9]**

Q7) a) Explain the development platform of Arduino with reference to IDE, Board details and application. **[9]**

b) Explain the embedded software development process and tool chain. **[9]**

OR

Q8) a) Explain the development platform of Raspberry Pi with reference to IDE, Board details and application. **[9]**

b) How the testing and debugging is done using Simulator. Emulator. Logic analyzer tools? What is meant by porting of Embedded software into target system? **[9]**

Total No. of Questions : 8]

SEAT No. :

P-6617

[Total No. of Pages : 2

[6181]-180

B.E. (E & TC)

MODERNIZED IoT

(2019 Pattern) (Semester - VII) (404184E) (Elective - III)

Time : 2½ Hours] ***[Max. Marks : 70***

Instructions to the candidates:

1) ***Answer Q1 or Q2, Q3 or Q4, Q5 or Q6 and Q7 or Q8.***
2) ***Figures to the right side indicate full marks.***
3) ***Assume suitable data, if necessary.***

Q1) a) Explain the RFID middleware architecture. **[6]**

b) What is Z-Wave? Explain the two types of nodes in Z-Wave. **[6]**

c) What is MQTT? Describe components and methods in MQTT. **[8]**

OR

Q2) a) What is RPL? Explain how it is useful in loT implementations. **[6]**

b) What is Bluetooth Low Energy? Explain its architecture. **[6]**

c) What is 6 LowPAN? Write a brief overview of 6 LowPAN adaptation Layer. **[8]**

Q3) a) Describe various features of an aurdino board. **[8]**

b) Describe how do you sense the data and upload on the cloud using Rasberry Pi? **[8]**

OR

Q4) a) Describe various ports available on Raspberry Pi board. **[8]**

b) Write a program to display temperature and humidity for aurdino board interfaced with DHT 11 Sensor. **[8]**

P.T.O.

Q5) a) What are the IoT key technologies? Why security is important in IoT? **[8]**

b) What are various types of Big Data? Explain in detail. **[8]**

OR

Q6) a) What are the precursors of IoT? **[3]**

b) What are criteria for selection of sensors in IoT system Design. **[7]**

c) Write difference between IoT & IoT. **[6]**

Q7) a) Write about home automation using IoT. **[10]**

b) Describe use of loT in plant automation. **[8]**

OR

Q8) a) How IoT will be used to protect environmental loss? **[8]**

b) Describe use & loT in Health care. **[10]**

⌘⌘⌘

Total No. of Questions : 8]

SEAT No. : ____

P-6618

[Total No. of Pages : 2

[6181]-181

B.E. (E & TC)

DATA MINING

(2019 Pattern) (Semester - VII) (404185A) (Elective - IV)

Time : 2½ Hours] ***[Max. Marks : 70***

Instructions to the candidates:

1) ***Answer Q.1 or Q.2, Q.3 or Q. 4, Q.5 or Q.6, Q.7 or Q.8.***
2) ***Neat diagrams to be drawn wherever necessary.***
3) ***Figures to the right indicate full marks.***
4) ***Use of calculator is allowed.***
5) ***Assume suitable data if necessary.***

Q1) a) Discuss on the basic concept of Bayes Classification Methods. **[9]**

b) What are the different methods of Frequent Item set Mining Methods? **[9]**

OR

Q2) a) Compare and contrast FP growth algorithm with Apriori algorithm. **[9]**

b) Describe different data visualization techniques. **[9]**

Q3) a) Write in detail on CART algorithm. **[9]**

b) Explain Regression. Detail linear regression with an example. **[9]**

OR

Q4) a) Explain use of K-Nearest Neighbour Classification algorithm with suitable example. **[9]**

b) Write short notes on Support Vector Machines. **[9]**

Q5) a) What is outlier? Elaborate different methods used for outlier analysis. **[9]**

b) Elaborate DBSCAN clustering algorithm with example. **[8]**

P.T.O.

OR

Q6) a) What are different types of data in cluster analysis? **[9]**

b) Give the point of differences between classification and clustering. **[8]**

Q7) a) Explain the Page ranking technique in detail. **[9]**

b) Write short notes on web usage mining. **[8]**

OR

Q8) a) Explain web structure mining along with list of approaches used to structure the web pages to improve effectiveness of search engines and crawlers. **[9]**

b) Discuss on spatial data mining. **[8]**



Total No. of Questions : 8]

SEAT No. :

P-6619

[Total No. of Pages : 2

[6181]-182

B.E. (E & TC)

ELECTRONIC PRODUCT DEVELOPMENT

(2019 Pattern) (Semester - VII) (404185B) (Elective - IV)

Time : 2½ Hours] *[Max. Marks : 70*

Instructions to the candidates :

1) ***Answer Q.1 or Q.2, Q.3 or Q.4, Q.5 or Q.6, Q.7 or Q.8.***
2) ***Neat diagrams must be drawn wherever necessary.***
3) ***Figures to the right indicate full marks.***
4) ***Use of logarithmic tables slide rule, Mollier charts, electronic pocket calculator and steam tables is allowed.***
5) ***Assume suitable data, if necessary.***

Q1) a) Explain in detail Software Bugs and Testing? **[8]**

b) What are the types of Software? Explain Traditional Software Life Cycle. **[9]**

OR

Q2) a) Explain Risk Abatement and Failure Preventions in Software Design and Testing Methods. **[8]**

b) What are software bugs introduced how to locate and eliminate them. **[9]**

Q3) a) What is PCB? Elaborate PCB standards. What are the grounding Methodologies? **[9]**

b) Define/explain the following terms associated with PCB design **[9]**

i) Containment

ii) Electromagnetic interference (EMI)

iii) Electromagnetic compatibility (EMC)

OR

Q4) a) Explain configurations of routing topologies in PCB layout designing. **[9]**

b) Explain **[9]**

i) Power Conversion Choices

ii) Power Distribution

iii) Line Conditioning

P.T.O.

Q5) a) Explain Analog-Digital conversion in detail? **[9]**

b) Compare Electromechanical, Active and Passive Components? **[9]**

OR

Q6) a) Explain techniques for Trouble shooting, of electronic device. **[9]**

b) Write a note on Good Programming Practice. **[9]**

Q7) a) What do you mean by documentation? What are the different types of documentations? **[8]**

b) Discuss about records, accountability and liability with respect to documentation. **[9]**

OR

Q8) a) What is concept of Bill of Material (BOM)? Explain with suitable example. **[9]**

b) Write a short note on followings : **[8]**

i) Layout of documentation.

ii) Need of documentation.

▽▽▽▽

Total No. of Questions : 8]

SEAT No. :

P-6620

[Total No. of Pages : 2

[6181]-183
B.E. (E & TC Engineering)
DEEP LEARNING
(2019 Pattern) (Semester - VII) (Elective-IV) (404185C)

Time : 2½ Hours] ***[Max. Marks : 70***

Instructions to the candidates :

1) ***Figures to the right indicate full marks.***
2) ***Neat diagrams must be drawn whenever necessary.***
3) ***Assume suitable data, if necessary.***

Q1) a) What is batch normalization? How batch normalization works? **[8]**

b) Explain Dropout Technique. What is intuition behind dropout? **[9]**

OR

Q2) a) Write note on Auto Encoder. Explain Architecture of Autoencoders. **[9]**

b) Distinguish between Autoencoders and Restricted Boltzmann Machine.**[8]**

Q3) a) What is VGG architecture? How Speed and Accuracy of VGG is greater than AlexNet. Explain. **[11]**

b) Explain any 3 Regularization techniques for Neural Networks. **[6]**

OR

Q4) a) Explain DenseNet architecture with its advantages and disadvantages.**[10]**

b) How does Batch Normalization work? **[7]**

Q5) a) What Recurrent neural network? Explain it's architecture in detail? **[10]**

b) What is LSTM and it's working? **[8]**

OR

P.T.O.

Q6) a) How does Vanishing Gradient problem occurs in RNN. **[8]**

b) What Are Generative Models? What Are Generative Adversarial Networks? Why Generative Adversarial Networks? **[10]**

Q7) a) Explain Image classification applications using Transfer leaning architect. **[12]**

b) Explain Image recognition using deep learning. **[6]**

OR

Q8) a) Explain sentiment analysis of any social media application? **[9]**

b) Explain spam mail classification applications using NLP? **[9]**



Total No. of Questions : 8]

SEAT No. :

P6621

[Total No. of Pages : 3

[6181]-184
B.E. (E & TC)
FIBER OPTIC COMMUNICATION
(2019 Pattern) (Semester - VIII) (404190)

Time : 2½ Hours] *[Max. Marks : 70*

Instructions to the candidates:

1) ***Answer Q1 or Q2, Q3 or Q4, Q5 or Q6, Q7 or Q8.***
2) ***Neat diagrams must be drawn wherever necessary.***
3) ***Figures to the right indicate full marks.***
4) ***Assume suitable data if necessary.***

Q1) a) When 3×10^{11} photons each with a wavelength of 0.85 μm are incident on a photo diode, on average. 1.2×10^{11} electrons are collected at the terminals of the device. Determine the quantum efficiency and the responsivity of the photodiode at 0.85μm. **[6]**

b) Explain the detection process in the p-n photodiode. **[6]**

c) Define and explain the important performance and compatibility requirements for detectors. **[6]**

OR

Q2) a) A p-n photodiode has a quantum efficiency of 50% at a wavelength of 0.9 μm. **[6]**

Calculate:

i) its responsivity at 0.9 μm;

ii) the received optical power if the mean photocurrent is 10^{-6} A;

iii) the corresponding number of received photons at this wavelength

b) Enlist various noises in photodetector. Explain one of them in detail. **[6]**

c) With the help of diagram explain working of APD. **[6]**

P.T.O.

Q3) a) Let the data rate of 20Mb/s and BER of 10^{-9} For the receiver PIN photodiode operating at 850 nm, the required receiver input signal is –42dBm .The LED is used as a source can couple 50uW(–l3dBm) average optical power into a fiber flylead with a 50 μm core diameter. Assume 1dB loss occurs when the fiber flylead is connected to the cable and another 1dB connector loss at the cable-photo detector interface. System margin of 6dB. Let attenuation per km is 3.5dB/km. Estimate link length. **[8]**

b) Draw and explain Fiber Bragg Grating. **[6]**

c) Explain EDFA in detail. **[4]**

OR

Q4) a) Explain Rise time budget. Give equation for the same. **[6]**

b) A 2×2 biconical tapered fiber coupler has an input optical power level of P_0 = 200 mW. The output powers at the other three ports are P_1= 90 mW, P_2= 85 mW, and P_3 = 6.3 nW. What are the coupling ratio, excess loss, insertion losses, and return loss for this coupler? **[8]**

c) With the help of diagram explain optical Isolator. **[4]**

Q5) a) Explain SONET structure in details. **[5]**

b) Enlist and explain advantages and applications of SONET. **[6]**

c) With the help of diagram explain AON. **[6]**

OR

Q6) a) Explain long haul networks. **[7]**

b) Explain w.r.t. FDDI the following: **[10]**

i) FDDI model

ii) Frame structure

iii) Ring structure

Q7) a) Enlist widely used optical system test instruments and explain their functions. **[6]**

b) Draw Schematic experimental setup for determining fiber attenuation by the cutback technique. Explain the same. **[6]**

c) Explain Dispersion measurement technique in detail. **[5]**

OR

Q8) a) Explain OTDR in detail. **[6]**

b) Explain Eye diagram test. Define fundamental measurement parameters. **[6]**

c) With the help of diagram explain NA measurement technique. **[5]**



Total No. of Questions : 8]

SEAT No. : ____

P6622

[Total No. of Pages : 2

[6181]-185

B.E. (E&TC)

BIOMEDICAL SIGNAL PROCESSING

(2019 Pattern) (Semester-VIII) (Theory) (404191 A) (Elective-V)

Time : 2½ Hours] ***[Max. Marks : 70***

Instructions to the candidates:

1) ***Solve Q1 or Q.2, Q.3 or Q.4, Q.5 or Q.6, Q.7 or Q.8.***
2) ***Neat diagrams must be drawn wherever necessary.***
3) ***Figures to the right side indicate full marks.***
4) ***Assume suitable data wherever necessary.***

Q1) a) Illustrate the following EEG signal analysis approaches : Frequency, Time, and wavelet-Domain analysis. **[9]**

b) Paraphrase the human brain and its functions. Comment on EEG Frequency Spectrum and significance of EEG. **[9]**

OR

Q2) a) Summarize the neurological evoked potential with respect to Auditory, somatosensory, Visual and Event-Related Potentials. **[10]**

b) Articulate the feature extraction techniques of EEG. What are the possible sources of noise in EEG Acquisition? **[8]**

Q3) a) Illustrate the following EMG signal analysis approaches: Frequency, Time, and Wavelet-Domain Analysis. **[10]**

b) Describe Motor Unit, Muscle Contraction, Signal of Muscles and significance of EMG. **[7]**

OR

Q4) a) Articulate the feature extraction techniques of EMG. What are the possible sources of noise in EMG Acquisition. **[9]**

b) Summarize the neuromuscular transmission in Motor Units and defects in Muscle Cell Membrane. **[8]**

P.T.O.

Q5) a) Explain Magnetoencephaloraphy (MEG). What is Magnetoencephalography used for? What is an MEG test used to diagnose? **[9]**

b) What is the relationship between blood flow and blood pressure? How is blood pressure measured? **[8]**

OR

Q6) a) Describe electrooculogram (EoG). How is an Electrooculogram recorded? what is EOG used to measure? What is the frequency band of EOG?**[9]**

b) Describe respiratory signals. How is it measured? Summarize the significance. What are the abnormalities associated with it? **[8]**

Q7) a) Illustrate adaptive noise canceller for the cancellation of 50 Hz signal in ECG with an algorithm/ flowchart. **[9]**

b) Paraphrase in detail

i) LMS adaptive algorithm

ii) Steepest descent algorithm. **[9]**

OR

Q8) a) Describe the following digital filters with mathematical equations and response diagram.

i) IIR and FIR

ii) Notch filters

iii) Optimal and adaptive filters

iv) Weiner filters. **[12]**

b) Summarize types of noises in bio signals. **[6]**



Total No. of Questions : 8]

SEAT No. : ____

P6623

[Total No. of Pages : 2

[6181]-186

B.E. (E&TC Engineering)
INDUSTRIAL DRIVES & AUTOMATION
(2019 Pattern) (Semester-VIII) (Elective-V) (404191 B)

Time : 2½ Hours] ***[Max. Marks : 70***

Instructions to the candidates:

1) ***Solve Q1 or Q.2, Q.3 or Q.4, Q.5 or Q.6, Q.7 or Q.8.***
2) ***Neat diagrams must be drawn wherever necessary.***
3) ***Figures to the right side indicate full marks.***
4) ***Use of nonprogrammable calculator is allowed.***
5) ***Assume suitable data if necessary.***

Q1) a) Explain the Chopper Control of Separately excited DC Motor for motoring control and regenerative braking. Draw the speed torque curves for the same. **[9]**

b) What is the necessity of anti wind up circuit and explain anti winder circuit with P-I speed controller. **[8]**

OR

Q2) a) Draw the gating pulses for each of the four quadrants of operation of chopper controlled DC motor drive. **[9]**

b) State and explain the factors that limit high frequency operation of chopper **[8]**

Q3) a) Explain in detail the static Scherbius methods for controlling speed using solid state devices. **[9]**

b) Derive the torque equation and obtain the condition for maximum torque of three phase induction motor. **[9]**

OR

Q4) a) A 4 pole, 50 Hz, slipping induction motor has rotor resistance of 0.24 Ω/ phase and runs at 1440 rpm. Calculate external resistance per phase that must be added to lower the speed to 1250 rpm, torque being constant**[9]**

b) Draw the torque-slip characteristics of three phase induction motor. Indicate stable and unstable regions in it. , also indicate positions of starting torque, break down torque and full load torque on the characteristics. **[9]**

P.T.O.

Q5) a) Explain the working of Synchronous motor drives. **[9]**

b) Explain following control strategies for the permanent magnet synchronous motor drive system **[8]**

i) Constant torque-angle control

ii) Unity power factor control

OR

Q6) a) Explain with neat diagram variable frequency control mode of synchronous motor. **[9]**

b) A 6 MW , 3 phase ,11 KV star connected , 6 pole 50 Hz, 0.9 leading power factor synchronous motor has X =9Ω and R=0. Rated field current is 50 A. Machine is Controlled by variable frequency control at the constant v/f ratio upto the base speed and at the constant V above the base speed determine:

i) Torque and field current for the rated armature current, 750 rpm and 0.8 leading power factor.

ii) Armature current and power factor for half the motor torque, 1500 rpm and rated field current. **[8]**

Q7) a) Draw and explain stepper motor dynamic characteristics (Torque vs stepping rate characteristics) **[9]**

b) Compare between variable reluctance stepper motor and permanent magnet stepper motor. **[9]**

OR

Q8) a) Describe different operating modes of excitation of Stepper Motor. **[9]**

b) With block diagram explain the working of microprocessor based controller for Stepper Motor. **[9]**

● ● ●

Total No. of Questions : 8]

SEAT No. :

P-6624

[Total No. of Pages : 2

[6181]-187

B.E. (E & TC)

EMBEDDED SYSTEM DESIGN

(2019 Pattern) (Semester - VIII) (404191D) (Elective - V)

Time : 2½ Hours] *[Max. Marks : 70*

Instructions to the candidates:

1) ***Answer any one Questions out of Q. No. 1 or 2, Q. No. 3 or 4, Q. No. 5 or 6, Q. No. 7 or 8.***
2) ***Neat diagrams must be drawn wherever necessary.***
3) ***Figures to the right indicate full marks.***
4) ***Assume suitable data; if necessary.***
5) ***Use of scientific calculator is allowed.***

Q1) a) Describe configuration of GPIO. **[9]**

b) Summarize the use of HAL library for SPI, 12C and CAN module. **[8]**

OR

Q2) a) Describe Hardware Abstraction Layer (HAL) drivers. **[9]**

b) Illustrate USB Modules in the STM32F4 Microcontroller. **[8]**

Q3) a) What is FreeRTOS? How FreeRTOS is configured using STM32CubeMX? **[9]**

b) What are the various binary utilities in tool chain? Describe each. **[9]**

OR

Q4) a) How thread Management is done in FreeRTOS? **[9]**

b) Identify in detail the role of GNU debugger. **[9]**

Q5) a) Describe procedure of GUI Formation with TouchGFX for any two applications. **[9]**

b) Design an embedded system for Image transfer between PC and STM32F4. **[8]**

P.T.O.

OR

Q6) a) How to Interface of SPI based graphical LCD with STM32F4? **[9]**

b) Illustrate procedure of GUI Formation with TouchGFX for any two applications. **[8]**

Q7) a) Describe Linux Kernel. **[9]**

b) What is Hardware Abstraction Layer (HAL)? Explain. **[9]**

OR

Q8) a) Classify different android platforms used in embedded system in detail. **[9]**

b) Summarize File system layout and libraries within ASOP and imported into the AOSP (Android Open Source Project). **[9]**

⌘⌘⌘

Total No. of Questions : 10]

SEAT No. :

P-6625

[Total No. of Pages : 2

[6181]-188

B.E. (E&TC) (Theory)

MOBILE COMPUTING

(2019 Pattern) (Semester - VIII) (404191 E) (Elective - V)

Time : 2½ Hours] ***[Max. Marks : 70***

Instructions to the candidates :

1) ***Solve Q.1 or Q.2, Q.3 or Q.4, Q.5 or Q.6, Q.7 or Q.8 and Q.9 or Q.10.***
2) ***Neat diagrams must be drawn wherever necessary.***
3) ***Figures to the right indicate full marks.***
4) ***Assume suitable data if necessary.***

Q1) a) What is the basic purpose of DHCP? Explain the protocol with suitable diagram. **[8]**

b) Compare proactive routing protocols with reactive routing protocols. **[8]**

OR

Q2) a) How does Ad Hoc On-Demand Distance Vector Routing (AODV) route the data? What are its advantages and disadvantages? **[8]**

b) Explain basic terminologies of mobile IP. **[8]**

Q3) a) What is encapsulation in mobile IP? List different methods of encapsulation and explain any one of them. **[8]**

b) Explain snooping TCP with proper diagram. List its advantages and disadvantages. **[8]**

OR

Q4) a) Write short note on mobile-TCP. List its advantages and disadvantages. **[8]**

b) Explain with diagram the registration process of a mobile node via foreign agent (FA) and directly with home agent (HA). **[8]**

P.T.O.

Q5) a) Explain fading in detail? Classify types of fading. **[7]**

b) Explain Ricean fading channel model. Differentiate between Rayleigh fading and Ricean fading. **[7]**

OR

Q6) a) Compare wideband and narrowband channels. List any two channel models used in mentioned channels. **[7]**

b) Explain reflection, scattering and ISI in multipath fading channel with suitable diagram. **[7]**

Q7) a) What is mobile computing? Describe three components of mobile computing. **[7]**

b) Draw B2C model and explain any one B2C application. **[7]**

OR

Q8) a) Explain in brief design issues of mobile OS. **[7]**

b) What is M-commerce? Explain in brief any five attributes of M-commerce. **[7]**

Q9) What is an ad-hoc network? Explain VANET and MANET in detail. **[10]**

OR

Q10) Explain any five characteristics of mobile computing. **[10]**

▽▽▽▽

Total No. of Questions : 8]

SEAT No. :

P-6626

[Total No. of Pages : 2

[6181]-189

B.E. (E & TC)

SYSTEM ON CHIP

(2019 Pattern) (Semester - VIII) (404192A) (Elective - VI)

Time : 2½ Hours] ***[Max. Marks : 70***

Instructions to the candidates:

1) ***Answer Q. 1 or 2, Q. 3 or 4, Q. 5 or 6, Q. 7 or 8.***
2) ***Figures to the right side indicates full marks.***
3) ***Drawn neat diagram wherever necessary.***
4) ***Assume suitable data, if necessary.***

Q1) a) Write the truth table & symbol of 2I/p AND & OR gates. Write verilog code for gate instantiation of these gates. **[5]**

b) Write a verilog design code for 4:1 MUX along with comments. **[5]**

c) Explain the different types of operators supported in verilog with examples. **[8]**

OR

Q2) a) Write the truth table and symbol of Buffer and NOT gate. Write a verilog code for gate instantion of these gates. **[5]**

b) Write a verilog design code for 1 - bit full Adder. **[5]**

c) List any 5 difference between Tasks & functions. Explain continuous assignments in verilog with an example. **[8]**

Q3) a) What is floor planning? Explain abutted floor planning technique with the help of figure. **[5]**

b) Explain different rules of partitioning. **[5]**

c) Write a short note on : **[8]**

i) Coarse placement

ii) Legalization

iii) Keep-out margin

OR

P.T.O.

Q4) a) Write any 5 differences between Abutted and non-abutted floor plan techq. **[5]**

b) Explain the 2 partitioning method with figure. **[5]**

c) Write short note on : **[8]**

i) Netlist

ii) Fixed - die routing

iii) Variable - die routing

Q5) a) What are VLIW processors? Explain in details. **[8]**

b) Explain following : **[8]**

i) Instruction Decoder & Interlocus

ii) Exection unit.

OR

Q6) a) Explain superscalar processor. **[8]**

b) Explain following : **[8]**

i) Mean Reavest Rate Buffers

ii) Branch prediction

Q7) a) Explain type IIst Bus protocal. **[5]**

b) Write a short note on SOC memory system. **[5]**

c) Explain Cache memory its performance. **[8]**

OR

Q8) a) Explain type IInd Bus protocal. **[5]**

b) Write a short note on Board based memory system. **[5]**

c) Explain Cache memory its performance. **[8]**

⌘⌘⌘

Total No. of Questions : 8]

SEAT No. : ____

P-6627

[Total No. of Pages : 2

[6181]-190

B.E. (Electronics & Telecommunication)

NANO ELECTRONICS

(2019 Pattern) (Semester - VIII) (404192B) (Elective - VI)

Time : 2½ Hours] ***[Max. Marks : 70***

Instructions to the candidates:

1) ***Attempt Q1 or Q2, Q3 or Q4, Q5 or Q6, Q7 or Q8.***
2) ***Neat diagrams must be drawn wherever necessary.***
3) ***Figures to the right side indicate full marks.***
4) ***Assume suitable data if necessary.***

Q1) a) Explain Metal nano particles? Classified Nano particles Properties. **[8]**

b) Explain Properties of CNT & give its Applications. **[8]**

OR

Q2) a) What is Cluster? Explain Carbon nano tubes. **[8]**

b) Explain Nano material & Its Types. **[8]**

Q3) a) Explain Photolithography process in detail. **[9]**

b) Explain Electron Beam Lithography with neat Diagram. **[9]**

OR

Q4) a) Explain Nano electronics for communication. **[9]**

b) Explain Atomic Lithography with neat Diagram. **[9]**

Q5) a) What are molecular switch? Explain Ph switch. **[9]**

b) Explain MEMS. **[9]**

OR

P.T.O.

Q6) a) Explain NEMS. **[9]**

b) Explain types of Super molecular Switches. **[9]**

Q7) a) What are Nano sensor? Explain Optical Sensor. **[9]**

b) Which are types of Nano Sensor? Explain Nano biosensor. **[9]**

OR

Q8) a) What is Energy Capture? Explain Solar Cell. **[9]**

b) Explain Transformation. **[9]**

Total No. of Questions : 8]

SEAT No. :

P-6628

[Total No. of Pages : 2

[6181]-191

B.E. (Information Technology)

INFORMATION AND STORAGE RETRIEVAL

(2019 Pattern) (Semester-VII) (414441)

Time : 2½ Hours] ***[Max. Marks : 70***

Instructions to the candidates :

1) ***Answer Q1 or Q2, Q3 or Q4, Q5 or Q6, Q7 or Q8.***
2) ***Neat diagrams must be drawn wherever necessary.***
3) ***Figures to the right indicate full marks.***
4) ***Assume suitable data, if necessary.***

Q1) a) Calculate the precision and recall scores for the search, using the given data. **[6]**

A database contains 160 relevant records on a particular topic and a search was conducted on that topic and 120 records were retrieved. Out of 120 records retrieved, 90 were relevant.

b) What are alternative measures used to evaluate system performance. **[6]**

c) Explain in detail the term Precision and Recall. Explain with suitable examples. **[6]**

OR

Q2) a) What are User oriented measures used in performance evaluation of IR systems. **[6]**

b) Explain MRR and F-Score measures used in performance evaluation of IR systems. **[6]**

c) Define and explain Interface support for search process related to visualization in information system. **[6]**

Q3) a) What is distributed IR? Explain it with the help of Source Selection. **[9]**

b) Explain model of Multimedia information retrieval. **[8]**

OR

P.T.O.

Q4) a) What is multimedia IR? Explain the architecture of multimedia IR in detail. **[8]**

b) Explain Collection Partitioning with respect to Distributed IR. **[9]**

Q5) a) What is page ranking? Explain role of ranking in web searching with algorithm. **[8]**

b) Write a note on **[10]**

i) Request module and beautiful soup library.

ii) Web scraping

OR

Q6) a) Explain difference between centralized and distributed architecture of search engine. **[9]**

b) What is web searching? Define and explain the following terms with respect to web searching **[9]**

i) Crawling

ii) Web directories

Q7) a) Differentiate Collaborative filtering and Content based Filtering. **[8]**

b) Explain Vector Space Model for XML Retrieval. **[9]**

OR

Q8) a) Explain Text-Centric and Data-Centric XML retrieval. **[8]**

b) Explain in detail Content Based Recommendation of documents. **[9]**



Total No. of Questions : 8]

SEAT No. :

P6629

[Total No. of Pages : 2

[6181]-192

B.E. (Information Technology)
SOFTWARE PROJECT MANAGEMENT
(2019 Pattern) (Semester-VII) (414442)

Time : 2½ Hours] ***[Max. Marks : 70***

Instructions to the candidates:

1) ***Answer Q.1 or Q.2, Q.3 or Q.4, Q.5 or Q.6, Q.7 or Q.8.***
2) ***Neat diagrams must be drawn whenever necessary.***
3) ***Figures to the right indicate marks.***
4) ***Assume suitable data, if necessary.***

Q1) a) Explain the difference between the Critical Path Method (CPM) and the Program Evaluation and Review Technique (PERT) Formulate a network model for a simple project using either CPM or PERT, and calculate the early start, early finish, late start, and late finish dates for each activity. **[8]**

b) Explain the objectives of activity planning and discuss the different types of project schedules. Describe the steps involved in sequencing and Scheduling activities. **[10]**

OR

Q2) a) Explain the different risk response strategies and how to evaluate the risk to the schedule. **[8]**

b) Define risk management and explain the different stages of the risk management process. Discuss the different techniques for risk identification and prioritization. **[10]**

Q3) a) Explain the data visualization tools: Kanban boards, project calendars, and earned value charts. What are the two main components of project tracking and control? **[7]**

b) Discuss the different change request types and the change approval process. **[10]**

OR

P.T.O.

Q4) a) What are common methods of collecting project data from stakeholder. Explain how to calculate earned value and use it to calculate Schedule Performance Index (SPI) and cost performance index (CPI). **[7]**

b) Explain the different SCM tools and how they are used to track and manage changes to software artifacts. **[10]**

Q5) a) How to select a right person for the job? Explain the recruitment process in detail **[9]**

b) Discuss the different theories of organizational behaviour and their implications for software project management. Explain how the different factors that influence individual and team behaviour in software projects, such as motivation, personality, and group dynamics, can impact project performance. **[9]**

OR

Q6) a) Apply the Oldham-Hackman Job Characteristics Model to a software development role and discuss how the job design could be improved to increase job satisfaction and motivation. **[9]**

b) With relevant examples, differentiate between management and leadership **[9]**

Q7) a) What is Agile Project Management? List two benefits of using Azure DevOps for Agile Project Management **[7]**

b) Explain the concept of branching and merging in Azure DevOps and how it is used to support Agile Project Management. **[10]**

OR

Q8) a) What are the different stages of the application lifecycle management (ALM) process? What are the key features of Azure DevOps that support ALM? **[7]**

b) Explain how to use Azure Pipelines to implement continuous integration and continuous delivery (CI/CD) in an Agile project. Discuss the different ways to manage work items in Azure Boards. **[10]**

Total No. of Questions : 8]

SEAT No. :

P6630

[Total No. of Pages : 2

[6181]-193
B.E. (Information Technology)
DEEP LEARNING
(2019 Pattern) (Semester - VII) (414443)

Time : 2½ Hours] *[Max. Marks : 70*

Instructions to the candidates:

1) ***Answer 1/2,3/4, 5/6, 7/8 questions.***
2) ***Assume Suitable data jf necessary.***
3) ***Neat diagrams must be drawn wherever necessary.***
4) ***Figures to the right side indicate full marks.***

Q1) a) Discuss Feed-Forward Neural Networks vs Recurrent Neural Networks. **[8]**

b) Explain Recurrent Neural Networks and types of Recurrent Neural Networks. **[9]**

OR

Q2) a) Explain Long Short-Term Memory Networks (LSTM) in detail. **[8]**

b) Explain Encoder Decoder architectures, Recursive Neural Networks. **[9]**

Q3) a) Discuss different types of Applications of Autoencoders. **[9]**

b) Describe Denoising Autoencoders, Contractive Autoencoders. **[9]**

OR

Q4) a) Explain Regularized Autoencoders-Sparse Autoencoders. **[9]**

b) State and explain Undercomplete Autoencoders. **[9]**

Q5) a) Discuss Greedy Layer wise Pre-training methods. **[9]**

b) Explain Dense Net in detail. **[9]**

OR

P.T.O.

Q6) a) Elaborate Variants of CNN in detail. **[9]**

b) Explain Transfer Learning and Domain Adaption. **[9]**

Q7) a) Discuss Speech Recognition using Deep Learning. **[9]**

b) Explain Recommender system in detail. **[8]**

OR

Q8) a) What are Image Classification Techniques. **[9]**

b) Explain Natural Language Processing in detail. **[8]**



Total No. of Questions : 8]

SEAT No. :

P7838

[Total No. of Pages : 2

[6181]-194

B.E. (Information Technology)

MOBILE COMPUTING

(2019 Pattern) (Semester-VII) (414444 A) (Elective-III)

Time : 2½ Hours] *[Max. Marks : 70*

Instructions to the candidates:

1) ***Attempt Q1 or Q2, Q3 or Q4, Q5 or Q6, Q7 or Q8.***
2) ***Neat diagrams must be drawn wherever necessary.***
3) ***Figures to the right indicate full marks.***
4) ***Assume suitable data, if necessary.***

Q1) a) Explain the LTE network architecture. **[9]**

b) Explain the Second Generation of wireless communication with its standards. **[9]**

OR

Q2) a) Explain in detail the Third Generation Wireless Networks (3G). **[9]**

b) Explain the 5G technology with advantage and disadvantages. **[9]**

Q3) a) What is Tunneling and Encapsulation in Mobile IP. **[8]**

b) Explain in detail the DHCP protocol mechanism. **[9]**

OR

Q4) a) How the agent can be discovered using Mobile IP? Give the overlay of agent advertisement packet which includes mobility extension. **[8]**

b) Describe DSDV and DSR routing algorithms for adhoc networks? **[9]**

Q5) a) Explain WTP Protocol. Can we use Snooping TCP as a transparent TCP? **[9]**

b) Explain the requirements for the evolution of new mobile IP protocol.**[9]**

OR

P.T.O.

Q6) a) Explain in detail the WAP model architecture. **[9]**

b) Explain Slow start, Fast retransmit/fast recovery in regard with TCP. **[9]**

Q7) a) Write short notes on: **[9]**

i) Symbian OS

ii) Android.

b) Discuss the security issues in M Commerce. **[8]**

OR

Q8) a) Explain the components of Mobile Operating System. **[9]**

b) Write a note on Software Development Kit-iOS SDK and Android SDK? **[8]**



Total No. of Questions : 8]

SEAT No. :

P-6631

[Total No. of Pages : 2

[6181]-195

B.E. (Information Technology)

HIGH PERFORMANCE COMPUTING

(2019 Pattern) (Semester - VII) (414444B) (Elective - III)

Time : 2½ Hours] *[Max. Marks : 70*

Instructions to the candidates:

1) ***Answer Q1 or Q2, Q3 or Q4, Q5 or Q6, Q7 or Q8.***
2) ***Neat diagrams must be drawn wherever necessary.***
3) ***Figures to the right side indicate full marks.***
4) ***Assume suitable data if necessary***

Q1) a) Write a short note on circular shift on a mesh. **[9]**

b) Explain the Broadcast and Reduction example for multiplying matrix with a vector. **[9]**

OR

Q2) a) Write a short note on All-to-one reduction with suitable example **[6]**

b) Explain prefix-sum operation for an eight-node hypercube. **[6]**

c) Explain the scatter and gather operation. **[6]**

Q3) a) Explain sources of overhead in parallel programs with an example. **[8]**

b) Explain the effect of Granularity on Performance. **[9]**

OR

Q4) a) Explain in detail the Scalability of the parallel system. **[8]**

b) What are the Performance metrics for a parallel system? **[9]**

Q5) a) Describe CUDA Architecture in detail with a neat diagram. **[9]**

b) Design a simple CUDA kernel function to multiply two integers. **[9]**

OR

P.T.O.

Q6) a) Explain Memory Contention and Device to Host Communications in CUDA programming. **[9]**

b) Write advantages, limitations and application of CUDA. **[9]**

Q7) a) Explain Matrix - Matrix multiplication in detail. **[8]**

b) Explain parallel Depth First Search for solving 8 puzzle problem. **[9]**

OR

Q8) a) Explain odd-even transportation on bubble sort using a parallel formulation. **[8]**

b) Explain Dijkstra's algorithm in the parallel formulation. **[9]**



Total No. of Questions : 8]

SEAT No. :

P-6632

[Total No. of Pages : 2

[6181]-196

B.E. (Information Technology)

MULTIMEDIA TECHNOLOGY

(2019 Pattern) (Semester - VII) (414444C) (Elective - III)

Time : 2½ Hours] *[Max. Marks : 70*

Instructions to the candidates :

1) ***Answer Q.1 or Q.2, Q.3 or Q.4, Q.5 or Q.6, Q.7 or Q.8.***
2) ***Neat diagram must be drawn wherever necessary.***
3) ***Figures to the right indicate full marks.***
4) ***Assume suitable data, if necessary.***

Q1) a) What is a Sound wave? Explain the characteristics of sound waves. What are psychoacoustic parameters of sound? **[8]**

b) Explain any three Video transmission standards in detail. **[9]**

OR

Q2) a) What is Audio compression? Explain the DM Audio compression technique with suitable example. **[8]**

b) Explain H-261 and H-263 Video Compression techniques with suitable examples. **[9]**

Q3) a) What is animation? Explain types of animation. **[8]**

b) Explain application of animation. **[9]**

OR

Q4) a) Write a note on 3D Animation. **[8]**

b) What is mean by key framing and tweening? Explain their importance. **[9]**

Q5) a) Explain Virtual Reality Architecture with suitable diagram. **[9]**

b) What is the significance of modeling in virtual reality? Explain anyone modeling technique used in virtual reality. **[9]**

OR

P.T.O.

Q6) a) What are the Advantages and Disadvantages of Virtual Reality? **[9]**

b) How is VR used in health care? Explain in detail with suitable scenario. **[9]**

Q7) a) What is Multimedia Database? Explain general architecture of Multimedia Database with suitable diagram. **[9]**

b) Explain Android Multimedia Framework Architecture with suitable diagram. **[9]**

OR

Q8) a) What is Quality of Service? Explain various QoS parameter for Multimedia transmission. **[9]**

b) Define and explain in brief with respect to multimedia Gaming. **[9]**

i) Mobile Gaming

ii) Cloud Gaming

▽▽▽▽

Total No. of Questions : 8]

SEAT No. : ____

P-6633

[Total No. of Pages : 2

[6181]-197
B.E. (Information Technology)
SMART COMPUTING
(2019 Pattern) (Semester-VII) (Elective-III) (414444D)

Time : 2½ Hours] ***[Max. Marks : 70***

Instructions to the candidates :

1) ***Answer Q1 or Q2, Q3 or Q4, Q5 or Q6, Q7 or Q8.***
2) ***Neat diagrams must be drawn wherever necessary.***
3) ***Figures to the right indicate full marks.***
4) ***Assume suitable data, if necessary.***

Q1) a) What is meant by ubiquitous systems? Discuss the important features of ubiquitous computing? **[6]**

b) Discuss internal system properties proposed by Weiser with neat diagram. **[7]**

c) Discuss iHCI in ubiquitous computing? **[5]**

OR

Q2) a) Describe Smart DEI Model with neat diagram. **[7]**

b) Discuss different application areas of ubiquitous computing? **[6]**

c) What are basic types of environment for Ubicomp systems? **[5]**

Q3) a) What do you meant by "Smart" devices? Explain important characteristics of smart devices in ubiquitous computing? **[9]**

b) Draw a neat diagram of service provision life cycle and explain in details.**[8]**

OR

Q4) a) Explain the importance of virtualization? Discuss the need of Virtual Mchine Monitor in virtual machine? **[9]**

b) Write short note on **[8]**

i) Service Oriented Architecture

ii) Mobile Code

P.T.O.

Q5) a) Draw.block diagram of sensors and explain an application associated with wireless sensor networks. **[9]**

b) Discuss Micro- Electro-Mechanical Systems (MEMS) in detail? **[9]**

OR

Q6) a) Discuss the advantages and disadvantages of embedded system? Explain how it is different than normal operating system? **[9]**

b) What are different types of control systems used for physical world tasks? Explain in detail. **[9]**

Q7) a) What are different layers of the IoT protocol stack? **[8]**

b) What is Internet of Things? Enlist different characteristics of Internet of Things (IoT)? **[9]**

OR

Q8) a) Describe different Characteristics of Smart Home? Which are different communication technologies used for Smart Homes. **[9]**

b) What are the different components of loT? Explain with neat diagram? **[8]**



Total No. of Questions : 8]

SEAT No. :

P-6634

[Total No. of Pages : 2

[6181]-198

B.E. (IT)

BIOINFORMATICS

(2019 Pattern) (Semester - VII) (414445A) (Elective - IV)

Time : 2½ Hours] ***[Max. Marks : 70***

Instructions to the candidates:

1) ***Answer Q.1 or Q.2, Q.3 or Q.4 Q.5 or Q.6, Q.7 or Q.8.***
2) ***neat labelled diagrams must be drawn wherever necessary.***
3) ***Assume suitable data if necessary.***

Q1) a) Explain the PAM (Point Accepted Mutation) matrix and its significance in sequence alignments. Discuss how PAM matrices are constructed and their application in measuring sequence similarities. **[8]**

b) Compare and contrast local alignment and global alignment techniques in sequence alignments. Discuss their respective uses and advantages in different biological scenarios. **[9]**

OR

Q2) a) Define sequence visualization and explain why it is used and describe two different methods of sequence visualization. **[8]**

b) Explain the statistical concepts used in analyzing microarray data. Discuss the principles of normalization, statistical significance testing, and gene expression analysis in the context of microarray experiments. **[9]**

Q3) a) Explain the concept of classification algorithms and their role in predicting and classifying biological data. Provide examples of classification algorithms commonly used in bioinformatics. **[9]**

b) Discuss the BLAST algorithm and its significarce in bioinformatics. **[9]**

OR

P.T.O.

Q4) a) Describe the FASTA algorithm and its application in sequence alignment. Provide an example to illustrate how the algorithm works. **[9]**

b) Explain the concept of Hidden Markov Models (HMMs) in bioinformatics. Discuss their applications in sequence analysis and prediction. **[9]**

Q5) a) What are the applications of bioinformatics in the drug discovery process? Provide examples of how bioinformatics tools and techniques are utilized to analyze biological data and facilitate drug discovery. **[8]**

b) Describe the process of modeling and simulation in drug discovery. Discuss how computational methods and simulations contribute to the understanding of drug behavior and efficacy. **[9]**

OR

Q6) a) Describe the hierarchical organization of protein structure, and provide an example illustrating each level of organization. **[8]**

b) Explain the concept of drugs and the drug discovery process. Discuss the key steps involved in discovering and developing new drugs. **[9]**

Q7) a) Describe the process of genetic engineering and its applications in agriculture. Discuss the potential benefits and concerns associated with genetically modified organisms (GMOs). **[9]**

b) What is the role of biotechnology in environment? **[9]**

OR

Q8) a) Discuss the emerging trends and advancements in medical technology that are shaping the future of medicine. Include topics such as precision medicine, personalized therapies and the integration of artificial intelligence in healthcare. **[9]**

b) What are some everyday applications of nanotechnology in various aspects of our lives? **[9]**

⌘⌘⌘

Total No. of Questions : 8]

SEAT No. : ____

P-6635

[Total No. of Pages : 2

[6181]-199

B.E. (Information Technology)

INTRODUCTION TO DEVOPS

(2019 Pattern) (Semester - VII) (414445B) (Elective - IV)

Time : 2½ Hours] ***[Max. Marks : 70***

Instructions to the candidates:

1) ***Answer Q1 or Q2, Q3 or Q4, Q5 or Q6, Q7 or Q8.***
2) ***Neat diagrams must be drawn wherever necessary.***
3) ***Figures to the right side indicate marks.***
4) ***Assume suitable data, if necessary.***

Q1) a) What is Continues Integration? What are the benefits of CI? **[6]**

b) What are the most important characteristics of CI/CD pipeline? **[6]**

c) What is build stage? Write step wise process to generate builds? **[6]**

OR

Q2) a) How CI helps to improve the time to market aspect for business and development teams? **[6]**

b) What are continues strategy scenarios? **[6]**

c) What is the use of code repository server? How to select a good repository server? **[6]**

Q3) a) Explain in details about Automated Acceptance Test Best Practices. **[5]**

b) Explain the components of continuous testing. **[4]**

c) What are the key stages of a deployment pipeline? What are the primary objectives of each stage? **[8]**

OR

P.T.O.

Q4) a) Explain in details about Trade-offs in the deployment pipeline. **[5]**

b) How does integration testing differ from unit testing? **[4]**

c) Write Short note on : **[8]**

i) Commit Stage.

ii) Automated acceptance test gate.

Q5) a) What is a Monitoring System? What are key requirements of our monitoring system? **[6]**

b) Differentiate between white box monitoring and black box monitoring. **[6]**

c) What is Site Reliability Engineering? What does a Site Reliability Engineer do? **[6]**

OR

Q6) a) What main components must be considered when building a monitoring system? **[6]**

b) What is SRE? What are some common tools used by SREs? Give one example of each? **[6]**

c) What are the different sources of collecting data for a monitoring system? **[6]**

Q7) a) How can serverless orchestration help streamline the deployment of serverless applications? **[6]**

b) What are some common challenges faced when using Bug tracking tools and the ELK stack and how can they be addressed? **[6]**

c) Write a note on Jenkins and its role in Continuous Integration. **[5]**

OR

Q8) a) Write a note on Selenium and its role in Continuous testing. **[6]**

b) What is version control system? Explain its types. **[6]**

c) What is the role of Kubernetes in modern DevOps workflows and how does it integrate with other tools in the pipeline? **[5]**

Total No. of Questions : 8]

SEAT No. :

P-6636

[Total No. of Pages : 2

[6181]-200

B.E. (Information Technology)

COMPUTER VISION

(2019 Pattern) (Semester - VII) (414445 C) (Elective - IV)

Time : 2½ Hours] ***[Max. Marks : 70***

Instructions to the candidates :

1) ***Answer Question 1 or 2, 3 or 4, 5 or 6 and 7 or 8.***
2) ***Neat diagrams must be drawn wherever necessary.***
3) ***Figures to the right indicate full marks.***
4) ***Assume Suitable data, if necessary.***

Q1) a) What is feature? State different feature extraction techniques. Explain any two in detail. **[9]**

b) Compare different edge detection techniques. State which detector detects which type of edge. **[9]**

OR

Q2) a) Explain how Sobel edge detection operator is derived in detail. What type of edges are detected using it? **[9]**

b) Write a note on feature matching and feature tracking. **[9]**

Q3) a) Explain RANSAC algorithm to detect straight line detection. **[9]**

b) Describe edge-liking using Hough Transform. State difference between an edge and boundary using suitable example. **[8]**

OR

Q4) a) Write a note on Generalized Hough Transform? Explain how it is used to detect an ellipse. **[9]**

b) What is meant by feature collation? How GHT is used for feature collation? **[8]**

P.T.O.

Q5) a) What is mean by Dimensionality Reduction? Which method is used for dimensionality reduction in unsupervised learning? Explain. **[9]**

b) Explain binocular images with respect to projection schemes for 3-D vision. **[9]**

OR

Q6) a) Write a note on volumetric representations. **[9]**

b) Write a note on triangulation and bundle adjustment. **[9]**

Q7) a) Write a note on personal photo collections and category recognition. **[9]**

b) Write a note on roadway, road markings and road signs. **[8]**

OR

Q8) a) Explain how the views of multiple cameras are combined. **[9]**

b) Write a note on chamfer matching, tracking, and occlusion. **[8]**

▽▽▽▽

Total No. of Questions : 8]

SEAT No. :

P-6637

[Total No. of Pages : 2

[6181]-201
B.E. (Information Technology)
WIRELESS COMMUNICATION
(2019 Pattern) (Semester - VII) (Elective-IV) (414445D)

Time : 2½ Hours] ***[Max. Marks : 70***

Instructions to the candidates :

1) ***Answer Q.1 or Q.2, Q.3 or Q.4, Q.5 or Q.6, Q.7 or Q.8.***
2) ***Neat diagrams must be drawn wherever necessary.***
3) ***Figures to the right side indicate full marks.***
4) ***Assume Suitable data if necessary.***

Q1) a) Discuss Space Division Multiple Access (SDMA) in detail & state its characteristics. **[9]**

b) Elaborate on usefulness of MIMO (Multiple Input Multiple Qutput) technique in multiple access environment. **[9]**

OR

Q2) a) How would you differentiate between CDMA (Code Division Multiple Access) & SDMA (Space Division Multiple Access)? **[9]**

b) What do you understand by IDMA (Interleave Division Multiple Access)? Discuss in detail. **[9]**

Q3) a) Examine Wireless Application Protocol for effectiveness in wireless communication environment. **[9]**

b) What is LoRaWAN? Enlist & explain LoRaWAN network elements. **[8]**

OR

Q4) a) Write Short Notes on : UMTS Security, Bluetooth Security, WEP, WPA2. **[9]**

b) Discuss how NFC works? What are different characteristics of NFC? **[8]**

P.T.O.

Q5) a) Enlist and explain different security issues and challenges in 1G, 2G, 3G and 4G communication model. **[9]**

b) Explain in details post-quantum cryptography and Molecular Communication. **[9]**

OR

Q6) a) How can you sort the security issues and challenges found in GSM. **[9]**

b) What is Visible Light Communication and Distributed Ledger? Explain in detail. **[9]**

Q7) a) Investigate the working and benefits of 5G NR (New Radio). **[9]**

b) What is multimedia security? Explain multimedia security in 5G and 6G. **[8]**

OR

Q8) a) What do you understand by Holographic MIMO Surfaces for 6G Wireless Networks? Explain in detail. **[9]**

b) Summarize different application of Wireless Technology. **[8]**



Total No. of Questions : 8]

SEAT No. :

P6638

[Total No. of Pages : 3

[6181]-202
B.E. (Information Technology)
DISTRIBUTED SYSTEMS
(2019 Pattern) (Semester - VIII) (414450)

Time : 2½ Hours] *[Max. Marks : 70*

Instructions to the candidates:

1) ***Answer Q1 or Q2, Q3 or Q4, Q5 or Q6, Q7 or Q8.***
2) ***Neat diagrams must be drawn wherever necessary.***
3) ***Figures to the right side indicate full marks.***
4) ***Assume suitable data if necessary.***

Q1) a) Why is computer clock synchronization necessary? Describe the design requirements for a system to synchronize the clocks in a distributed system. **[8]**

b) What is NTP? With the help of a diagram, describe how NTP works. **[9]**

OR

Q2) a) Why is the Berkeley algorithm used? Describe how it works using pseudocode. **[8]**

b) What is MPI? Describe the point-to-point communication in MPI with suitable diagram. **[9]**

Explain in brief, the following send operations in MPI :

i) *MPI_Ssend*

ii) *MPI_Bsend,*

iii) *MPI_Rsend*

iv) *MPI_Isend*

P.T.O.

Q3) a) What are the key issues in Replica Management? Explain the following with respect to content replication and placement with suitable diagram. **[9]**

i) Permanent Replicas

ii) Server-Initiated Replicas

iii) Client-Initiated Replicas

b) What is a primary-based protocol in a consistency protocol? Explain the working of primary-backup protocol with suitable diagram. **[9]**

OR

Q4) a) What are the requirements of dependable systems with respect to fault tolerance? How RPC handles the communication failure in the presence of : **[9]**

i) The client is unable to locate the server.

ii) The request message from the client to the server is lost.

b) What is the distribution commit problem? Discuss how this problem is solved using the two-phase commit protocol with suitable diagram. **[9]**

Q5) a) What are the key design issues for distributed file systems? Describe the requirements for distributed file systems. **[8]**

b) Why Quality of Service Management is important in Distributed Multimedia Systems? Describe QoS manager responsibilities using suitable graphical representation. **[9]**

OR

Q6) a) Describe, using the appropriate diagram, how a web service is implemented in horizontal distribution using web server clusters. **[8]**

b) Explain in brief, the two places of client-side web caching? Explain cooperative caching with suitable diagram. **[9]**

Q7) a) What is Service Oriented Architecture (SOA)? Explain the various SOA components. How does it differ from traditional software architecture? **[9]**

b) Explain in brief, the key features of Zabbix. **[9]**

OR

Q8) a) Explain in brief, the key features of Prometheus including data model, query language, or alerting rules. **[9]**

b) Provide an overview of Mach and CHORUS microkernels. How are memory management techniques used to avoid physical copying of data in Mach and CHORUS? **[9]**



Total No. of Questions : 8]

SEAT No. : ____

P-6639

[Total No. of Pages : 2

[6181]-203

B.E. (I.T.)

SOFTWARE DEFINED NETWORK

(2019 Pattern) (Semester-VIII) (414451A) (Elective - V)

Time : 2½ Hours] ***[Max. Marks : 70***

Instructions to the candidates :

1) ***Answer Q1 or Q2, Q3 or Q4, Q5 or Q6, Q7 or Q8.***
2) ***Neat diagrams must be drawn wherever necessary.***
3) ***Black figures to the right indicate full marks.***

Q1) a) Enlist Benefits & Challenges for Network Function Virtualization? **[9]**

b) Describe Various Services of Cloud using SDN? **[9]**

OR

Q2) a) Describe NFV architecture and explain Requirements of NFV Framework? **[9]**

b) Enlist and explain various Virtual Network Applications in Cloud Computing? **[9]**

Q3) a) Explain SDN Use Cases in the Data Center in Detail? **[9]**

b) Write Short note on Failure recovery and Multi Tenancy issues in Data Centers? **[9]**

OR

Q4) a) Differentiate between SDN and network virtualization? **[9]**

b) Define Data center Network & explain goals of Data center Design? **[9]**

Q5) a) Enlist and Describe Various Security Principles of SDN? **[9]**

b) Discuss different Issues and Challenges in Network Security enhancement using the SDN Framework? **[9]**

OR

P.T.O.

Q6) a) What are the Solutions to the security issues in SDN? **[9]**

b) Enlist Security Characteristics of SDN in detail? **[9]**

Q7) a) Describe Traffic Engineering in Mobile Networks with neat diagram? **[8]**

b) Enlist and Explain Floodlight Controller classes of APIs? **[8]**

OR

Q8) a) Draw & Explain application of Open Daylight Controller? **[8]**

b) Describe and explain Design of Reactive Application? **[8]**



Total No. of Questions : 8]

SEAT No. :

P-6640

[Total No. of Pages : 2

[6181]-204

B.E. (Information Technology)

SOCIAL COMPUTING

(2019 Pattern) (Semester - VIII) (Elective - V) (414451B)

Time : 2½ Hours] *[Max. Marks : 70*

Instructions to the candidates:

1) ***Answer the questions Q1 or Q2, Q3 or Q4, Q5 or Q6, Q7 or Q8.***
2) ***Figures to the right indicate full marks.***
3) ***Neat diagrams must be drawn wherever necessary.***
4) ***Use of Electronic calculator is allowed.***
5) ***Assume suitable data, if necessary.***

Q1) a) What is data mining? Draw and explain architecture of a typical data mining system. **[9]**

b) How would you define twitter? Explain with different services. **[8]**

OR

Q2) a) Explain hierarchical clustering algorithm with single linkage clustering. **[9]**

b) What is classification? Explain with diagram. **[8]**

Q3) a) Explain the Homophily & Influence. **[8]**

b) What is a shuffle test designed for in the context of social influence? Describe how it is performed. **[9]**

OR

Q4) a) How to measure Influence of Homophily. **[8]**

b) Describe how the edge reversal test works. What is it used for? **[9]**

Q5) a) Write major components of behaviour analysis methodology. **[9]**

b) What is individual behaviour modelling? Explain social community structure. **[9]**

P.T.O.

OR

Q6) a) What is Collective behaviour modelling? Differentiate it with Individual Behaviour modelling. **[9]**

b) Write major components of Behavior Analysis Methodology. **[9]**

Q7) a) Which factors are involved in quality of analytics for processing human language data? **[9]**

b) What is TF-IDF? Explain with the help of example. **[9]**

OR

Q8) a) What is natural language processing? Explain different steps which are involved in NLP. **[9]**

b) Describe breadth-first search in web crawling and Pros & Cons. **[9]**

Total No. of Questions : 8]

SEAT No. :

P-6641

[Total No. of Pages : 2

[6181]-205

B.E. (Information Technology)

Natural Language Processing

(2019 Pattern) (Semester - VIII) (414451C) (Elective - V)

Time : 2½ Hours] *[Max. Marks : 70*

Instructions to the candidates:

1) ***Answers: Q.1 or Q.2, Q.3 or Q.4, Q.5 or Q.6, Q.7 or Q.8.***
2) ***Neat diagrams must be drawn wherever necessary.***
3) ***Figures to the right side indicate full marks.***
4) ***Assume Suitable data if necessary.***

Q1) a) Write a short note on Semantic Analysis. **[6]**

b) Explain in detail the types of referring expressions. **[6]**

c) Explain Discourse reference resolution in detail. **[6]**

OR

Q2) a) What is Word Sense Disambiguation (WSD)? Explain the dictionary based approach to Word Sense Disambiguation. **[6]**

b) Describe in detail Centering Algorithm for reference resolution. **[6]**

c) How do anaphora affect cohesion in discourse processing? **[6]**

Q3) a) Explain with example a Dependency-Path Kernel for Relation Extraction. **[6]**

b) Explain the following : **[6]**

i) Domain Knowledge

ii) Knowledge Roles.

c) Explain the journey of text processing from word Sequences to dependency Paths. **[6]**

OR

P.T.O.

Q4) a) With a neat diagram explain the learning frame work architecture. **[8]**

b) Write short note on the following : **[10]**

i) In fact System Overview

ii) Global Security.org

Q5) a) How pages are classified for trainable document separation? **[9]**

b) Write a note on various approaches for analyzing texts. **[9]**

OR

Q6) a) Explain POS tagging with example. **[9]**

b) What is the concept of corpora? How do you use corpus in NLP? **[9]**

Q7) a) Explain the stammers in detail also frame net and word net. **[9]**

b) Explain design feature of IR system with a neat diagram. **[7]**

OR

Q8) a) Explain iStart in detail. **[9]**

b) Explain classical Information Retrieval Model. **[7]**

⌘⌘⌘

Total No. of Questions : 8]

SEAT No. :

P-6642

[Total No. of Pages : 2

[6181]-206

B.E. (Information Technology)

SOFT COMPUTING

(2019 Pattern) (Semester - VIII) (414451 D) (Elective - V)

Time : 2½ Hours] *[Max. Marks : 70*

Instructions to the candidates:

1) ***Answer Q1 or Q2, Q3 or Q4, Q5 or Q6, Q7 or Q8.***
2) ***Neat diagrams must be drawn wherever necessary.***
3) ***Figures to the right side indicate full marks.***
4) ***Assume suitable data if necessary.***

Q1) a) What are fuzzy relations? Explain following operations on fuzzy relations. **[9]**

i) Intersection

ii) Containment

b) What is Extension Principal for fuzzy arithmetic? Perform following operations. **[8]**

i) Multiplication

ii) Division

OR

Q2) a) List and explain following fuzzy set operations with e g. **[9]**

i) Normal fuzzy set

ii) Product of fuzzy set

b) How we perform Fuzzy to Crisp conversions? **[8]**

Q3) a) What is Genetic Algorithm? With the neat flow chart explain operations of simple genetic algorithms. **[9]**

b) Explain Multi-objective Genetic Algorithm (MOGA) in detail. **[9]**

OR

P.T.O.

Q4) a) What are Applications of Genetic Algorithms? Explain how genetic algorithms are used in search and optimization? **[9]**

b) Explain how Genetic Algorithms can be used in Image processing and pattern Recognition in detail. **[9]**

Q5) a) What is significance of Hybrid Systems in Soft Computing? What are various Hybrid Systems in Soft Computing? Explain any two. **[9]**

b) Explain Simplified Fuzzy ARTMAP with suitable case study. **[8]**

OR

Q6) a) Explain the working of Neuro fuzzy system with suitable diagram. **[9]**

b) Explain Genetic Algorithm based Back-propagation Network with suitable diagram. **[8]**

Q7) a) Describe an application about how soft computing can be used in mobile adhoc networks. **[9]**

b) Describe an application of soft Computing in Software Engineering. **[9]**

OR

Q8) Write Short Notes on following (Any Three) : **[18]**

a) Ant colony optimization (ACO)

b) Simulated Annealing

c) Tabu search

d) Particle Swarm Optimization (PSO)

□□□

Total No. of Questions : 8]

SEAT No. :

P-6643

[Total No. of Pages : 2

[6181]-207

B.E. (Information Technology)

GAME ENGINEERING

(2019 Pattern) (Semester - VIII) (414451 E) (Elective - V)

Time : 2½ Hours] ***[Max. Marks : 70***

Instructions to the candidates :

1) ***Answer Q.1 or Q.2, Q.3 or Q.4, Q.5 or Q.6, Q.7 or Q.8.***
2) ***Neat diagrams must be drawn wherever necessary.***
3) ***Figures to the right indicate full marks.***
4) ***Use of calculator is allowed.***
5) ***Assume suitable data if necessary.***

Q1) a) What is "Reclaiming Opposition" in the context of digital culture, and why is it important? **[6]**

b) What is "affective modulation", and how does it relate to the design of digital products and services? **[6]**

c) Explain any four mechanics which can be used in any gamified system designed for solving any social problems. **[6]**

OR

Q2) a) Explain how social engagement loop motivating emotion leads to player reengagement. **[6]**

b) Explain point system in game engineering. **[6]**

c) How levels and leaderboards act as game mechanics for designing game? **[6]**

Q3) a) What are the "Three Levels" of rules in game design and how do they relate to gameplay? **[6]**

b) What are "Positive and Negative Externalities" in network effects and how do they affect games played over networks? **[5]**

c) What is "Selfish Routing" and how does it relate to network games? **[6]**

OR

P.T.O.

Q4) a) How do "Wardrop and Nash Equilibrium" affect the design and play of network games? **[6]**

b) What is "Partially Optimal Routing" and how does it impact network games? **[5]**

c) What is the "Price of Anarchy" and how does it relate to network games and their outcomes? **[6]**

Q5) a) What are some popular game engines/frameworks, and what are their strengths and weaknesses? **[6]**

b) How does Godot 3.2 compare to other game engines in terms of functionality and ease of use? **[6]**

c) What are some key features of Construct 2, and how have they contributed to its popularity among game developers? **[6]**

OR

Q6) a) What are some key features of GameMaker: Studio, and how do they help developers create engaging games? **[6]**

b) What are some of the advantages and disadvantages of using Clickteam Fusion 2.5 for game development, and how does it compare to other game engines? **[6]**

c) What are some key features of Sploder, and how does it compare to other game engines in terms of ease of use and functionality? **[6]**

Q7) a) How is game engineering used in esports and what are some examples of successful esports games? **[9]**

b) What are some applications of game engineering in the field of teaching and learning, and how effective are they? **[8]**

OR

Q8) a) What are some key features of PUBG New State that distinguish it from other battle royale games? **[9]**

b) How have game developers used game engineering to create a flexible and customizable experience in Minecraft? **[8]**

▽▽▽▽

Total No. of Questions : 8]

SEAT No. :

P-6644

[Total No. of Pages : 2

[6181]-208

B.E. (Information Technology)

ETHICAL HACKING AND SECURITY

(2019 Pattern) (Semester - VIII) (414452A) (Elective - VI)

Time : 2½ Hours] *[Max. Marks : 70*

Instructions to the candidates :

1) ***Answer Q.1 or Q.2, Q.3 or Q.4, Q.5 or Q.6, Q.7 or Q.8.***
2) ***Neat diagrams must be drawn wherever necessary.***
3) ***Figures to the right side indicate full marks.***
4) ***Assume suitable data, if necessary.***

Q1) a) Explain the Browser exploitation method in detail. **[6]**

b) Explain Metasploit in detail. **[6]**

c) What is Social Engineering Toolkit (SET), How to Create a Backdoor with SET. **[6]**

OR

Q2) a) Explain the PDF Hacking with suitable example. **[6]**

b) Explain Port Scanning with Metasploit. What are system hacking countermeasures list any five? **[6]**

c) What are system hacking countermeasures list any five. **[6]**

Q3) a) What is authentication bypass? Explain with suitable flowchart. **[6]**

b) Explain Windows privilege escalation techniques with suitable examples. **[5]**

c) What is the Access token manipulation technique? **[6]**

OR

Q4) a) Detail describe about Privilege Escalation Attack Vectors. **[6]**

b) Explain Linux privilege escalation with an example. **[5]**

c) Explain Malware and social engineering with real time application. **[6]**

P.T.O.

Q5) a) What are the OWASP top 10 Web Application Security Risks explain any four tools. **[9]**

b) Explain the terms Cross-Site Scripting (XSS) and Cross-Site request forgery (CSRF). **[8]**

OR

Q6) a) Describe in detail SQL injection and Code injection in Web Application Hacking. **[6]**

b) Securing Modern Websites: Explain with example. **[5]**

c) Explain Secure Application Architecture in web application security. **[6]**

Q7) a) Explain the term, Wireless Security. **[6]**

b) Differentiate between WEP, WAP, WAP2 and WAP3. **[6]**

c) Explain the working of Wi-Fi Hacking. **[6]**

OR

Q8) a) What is Wi-Fi Hacking? Explain tools for Hacking Wireless Networks. **[6]**

b) Write a Short note on : **[6]**

i) WPA2 cracking.

ii) Network Snipping.

iii) Social Engineering.

c) What is an Evil Twin attack? **[6]**

▽▽▽▽

Total No. of Questions : 8]

SEAT No. :

P-6645

[Total No. of Pages : 2

[6181]-209

B.E. (Information Technology)

AUGMENTED AND VIRTUAL REALITY

(2019 Pattern) (Semester - VIII) (Elective - VI) (414452B)

Time : 2½ Hours] *[Max. Marks : 70*

Instructions to the candidates :

1) ***Answer Q.1 or Q.2, Q.3 or Q.4, Q.5 or Q.6, Q.7 or Q.8.***
2) ***Neat diagrams must be drawn wherever necessary.***
3) ***Figures to the right side indicate full marks.***
4) ***Assume suitable data if necessary.***

Q1) a) Explain different types of Visual Perception in detail. **[9]**

b) Explain concept of Visual Rendering in detail. **[9]**

OR

Q2) a) Explain concept of Motion in Real and Virtual Worlds in detail. **[9]**

b) Explain concept of Tracking in detail. **[9]**

Q3) a) How does Augmented Reality Work? Explain with suitable example. **[9]**

b) Describe any two applications of Augmented Reality. **[8]**

OR

Q4) a) Define Augmented Reality? Explain History of Augmented Reality. **[8]**

b) Explain Ingredients of an Augmented Reality Experience. **[9]**

Q5) a) Describe Sensor tracking methods in detail. **[9]**

b) List and Discuss different displays used in Augmented Reality systems. **[9]**

OR

Q6) a) Describe different types of AR devices. **[9]**

b) Describe sensor fusion with example. **[9]**

P.T.O.

Q7) a) What is natural-feature tracking? Describe with any one application. **[9]**

b) What is simultaneous localization and mapping in AR? **[8]**

OR

Q8) a) What are the major software components in augmented reality? **[9]**

b) What is marker tracking in AR? Explain in detail. **[8]**

▽▽▽▽

Total No. of Questions : 8]

SEAT No. :

P-6646

[Total No. of Pages : 3

[6181]-210

B.E. (I.T.)

BUSINESS ANALYTICS AND INTELLIGENCE

(2019 Pattern) (Semester-VIII) (414452C) (Elective - VI)

Time : 2½ Hours] ***[Max. Marks : 70***

Instructions to the candidates :

1) ***Answer Q.1 or Q.2, Q.3 or Q.4, Q.5 or Q.6, Q.7 or Q.8.***
2) ***Neat diagrams must be drawn wherever necessary.***
3) ***Figures to the right indicate full marks.***
4) ***Assume suitable data if necessary.***

Q1) a) Discuss the importance of data visualization and explain the types of data visualization. **[8]**

b) Explain with example the best practices used in dashboard design. **[5]**

c) What is KPI? Explain the types of KPIs. **[5]**

OR

Q2) a) Explain with neat diagrams various forms of charts and graphs used in visual analytics. **[8]**

b) Write a note on Dashboard design. Also explain the common characteristics of Dashboard. **[5]**

c) Discuss the use of Power BI as a Business Intelligence (BI) tool. **[5]**

Q3) a) Write a note on Mathematical Programming Optimization with an example. **[7]**

b) What is descriptive analytics? Explain the importance of descriptive analytics with the help of an example. **[5]**

c) Discuss the various Components of Decision Support Mathematical Models. **[5]**

OR

P.T.O.

Q4) a) Write a note on Decision Analysis with Decision Tables and Decision Trees. **[8]**

b) Consider a scenario that you own a bookstore and have 100 books in storage. You sell 60% books for the highest price of Rs. 500 and 40% books for the lower price of Rs. 200. **[9]**

Evaluate the above mentioned scenario using what if analysis with respect to :

Case 1: What if you sell 70% for the highest price & 30% for lowest price

Case 2: What if you sell 80% for the highest price & 20% for lowest price

Assume suitable data wherever required .

Q5) a) Explain the role of BI in finance with respect to **[7]**

i) Monitor Financial Performance .

ii) Budgeting and Forecasting

iii) Financial Reporting

b) Enlist the advantages of using Business Intelligence in Banking. **[4]**

c) With the help of a real time case study explain the applications of Business Intelligence in Fraud Detection. **[7]**

OR

Q6) a) Enlist & Explain the four types of Business Analytics in practice. **[8]**

b) Discuss the Applications of BI in Logistics and Production with the help of real time case study. **[5]**

c) How does visual analytics helps managers to improve revenue for business. **[5]**

Q7) a) What are rich reports? How are rich reports helping organizations to have a competitive advantage over their coompetitors. **[6]**

b) Explain BI Search and Text Analytics with the help of diagram. **[5]**

c) Write a short note on: Cloud Computing and Business Intelligence. **[6]**

OR

Q8) a) Discuss the critical success factors in developing a successful a BI strategy. **[6]**

b) Discuss the impacts of Analytics in Organizations with respect to Business Intelligence. **[6]**

c) Write a note on "Predicting the Future with the help of Data Analysis". **[5]**

Total No. of Questions : 8]

SEAT No. :

P-6647

[Total No. of Pages : 2

[6181]-211

B.E. (Information Technology)

BLOCKCHAIN TECHNOLOGY

(2019 Pattern) (Semester - VIII) (Elective - VI) (414452D)

Time : 2½ Hours] *[Max. Marks : 70*

Instructions to the candidates:

1) ***Answer Q1 or Q2, Q3 or Q4 , Q5 or Q6, Q7 or Q8.***
2) ***Neat diagrams must be drawn wherever necessary.***
3) ***Figures to the right side indicate marks.***
4) ***Assume suitable data, if necessary.***

Q1) a) What is Ethereum? Give its comparison with Bitcoin. **[9]**

b) State and explain the various components of Ethereum. **[9]**

OR

Q2) a) Explain how smart contracts work. **[9]**

b) Enlist the different languages supported by Ethereum. What is bytecode in Ethereum, give its importance. **[9]**

Q3) a) What is Hyperledger fabric architecture and explain its components. **[9]**

b) What are hyperledgure features? **[8]**

OR

Q4) a) Compare hyperledger with ethereum. **[9]**

b) Give the benefits of Hyperledger fabric. **[8]**

Q5) a) Explain, how blockchain tokenization can help in enterprise systems. **[6]**

b) What advantages does blockchain provide during tokenization? **[6]**

c) What are the benefits of tokenization for businesses and users? **[6]**

P.T.O.

OR

Q6) a) What are consensus mechanisms in blockchain and cryptocurrency? **[6]**

b) List out the challenges to tokenization in blockchain. **[6]**

c) What is tokenization using blookchain technology? **[6]**

Q7) a) Explain blockchain applications in financial sector. **[6]**

b) What are the benefits of blockchain in supply chain financing scenarios? **[5]**

c) What are the legal regulations for Blockchain in ransomware and money laundering. **[6]**

OR

Q8) a) Explain blockchain applications in retail & banking services. **[6]**

b) Explain role of blockchain in IoT. **[5]**

c) Explain risks and limitations of blockchain in healthcare. **[6]**

Total No. of Questions : 8]

SEAT No. :

P-6648

[Total No. of Pages : 2

[6181]-212

B.E. (Instrumentation & Control)

PROCESS CONTROL TECHNIQUES

(2019 Pattern) (Semester - VII) (406261)

Time : 2½ Hours] *[Max. Marks : 70*

Instructions to the candidates:

1) ***Answer Q1 or Q2, Q3 or Q4, Q5 or Q6, Q7 or Q8.***
2) ***Neat diagrams must be drawn wherever necessary.***
3) ***Figures to the right side indicate full marks.***
4) ***Assume Suitable data if necessary.***
5) ***Use of calculator is allowed.***

Q1) a) Derive closed loop transfer function of feedback control loop and state its closed loop stability condition. **[8]**

b) Explain detail procedure for determination of closed loop stability conditions of PI controller for first order plant model set point change. **[9]**

OR

Q2) a) Explain tuning and fine tuning of controller in detail. **[8]**

b) Discuss procedure for tuning of PI Controller using Zeigler-Nichols closed loop method for any suitable plant transfer function. **[9]**

Q3) a) Discuss selective control with suitable example. **[9]**

b) Explain ratio control configurations using multiplier and divider. **[9]**

OR

Q4) a) With neat sketch explain feedback-feedforward control and its application. **[9]**

b) Illustrate split range control with suitable example. **[9]**

P.T.O.

Q5) a) Explain relative gain array (RGA) and its important properties. Also discuss procedure for determination of RGA. **[10]**

b) Explain 2×2 multivariable control system in detail with block diagram. **[7]**

OR

Q6) a) Discuss procedure for calculation of λ. Calculate λ for below process model and comment on loop interaction and pairing. **[10]**

$$G_p(s) = \begin{bmatrix} \frac{-2e^{-s}}{10s+1} & \frac{1.5e^{-s}}{s+1} \\ \frac{1.5e^{-s}}{s+1} & \frac{2e^{-s}}{10s+1} \end{bmatrix}$$

b) Discuss direct and indirect effect of interaction with help of 2×2 systems. **[7]**

Q7) a) By using direct synthesis method determine PID structure and its settings for FOPDT model. **[10]**

b) Design PID controller for the FOPDT model using IMC method. **[8]**

OR

Q8) a) With neat block diagram discuss model predictive controller and IMC based PID controller. **[10]**

b) Explain Smith Predictor technique for compensation of delay time. **[8]**

Total No. of Questions : 8]

SEAT No. : ____

P6649

[Total No. of Pages : 2

[6181]-213

B.E. (Instrumentation and Control)
PROJECT ENGINEERING & MANAGEMENT
(2019 Pattern) (Semester-VII) (406262)

Time : 2½ Hours] ***[Max. Marks : 70***

Instructions to the candidates:

1) ***Answer Q.1 or Q.2, Q.3 or Q.4, Q.5 or Q.6, Q.7 or Q.8.***
2) ***Neat diagrams must be drawn whenever necessary.***
3) ***Assume suitable data, if necessary.***

Q1) a) Explain vendor document, drawing and reports as necessary for procurement activity. **[10]**

b) Define Risk Management process and what are the objectives of project resource management. **[8]**

OR

Q2) a) State the role of project procurement management & project procurement plan and discuss with suitable example. **[10]**

b) Explain procurement activities in the project. **[8]**

Q3) a) Explain the method of tagging and nomenclature scheme based on ISA standard with suitable examples and symbols. **[9]**

b) Elaborate instrument layout & junction box layout with suitable example. **[8]**

OR

Q4) a) Draw and explain PFD for the simple feedback control of heat exchanger. **[9]**

b) State the importance of loop wiring diagram prepare the loop wiring diagram according to ISA S-5.4 for flow loop control. **[8]**

P.T.O.

Q5) a) What are BOM and MBOM? Give its importance. **[6]**

b) What are the types of cable and class of conductors. **[6]**

c) Explain the cable identification scheme, cable trays. **[6]**

OR

Q6) a) Prepare bill of material (BOM) for any one application. **[10]**

b) Illustrate the panel testing procedure and its documentation require at this stage. **[8]**

Q7) a) What is FAT, SAT& CAT? Write the importance of the same, also prepare the CAT report for any instrumentation item. **[9]**

b) Cold commissioning.-4M

Hot Commissioning.-4M **[8]**

OR

Q8) a) Explain guidelines, considerations and testing in design of control panel.**[9]**

b) Explain the SAT for control panel. **[8]**

● ● ●

Total No. of Questions : 8]

SEAT No. :

P-6650

[Total No. of Pages : 2

[6181]-214

B.E. (Instrumentation & Control)

DIGITAL IMAGE PROCESSING

(2019 Pattern) (Semester - VII) (Elective - III) (406263A)

Time : 2½ Hours] ***[Max. Marks : 70***

Instructions to the candidates:

1) ***Solve Q.1 or Q.2, Q.3 or Q.4, Q.5 or Q.6, Q.7 or Q.8.***
2) ***Neat diagrams should be drawn wherever necessary.***
3) ***Use of Non- programmable Calculator is allowed.***
4) ***Assume suitable data if necessary.***

Q1) a) Explain the image enhancement. **[9]**

b) Explain the spatial filtering. **[8]**

OR

Q2) a) Explain linear stretching and non-linear stretching. **[8]**

b) Write short note on histogram specification with some examples. **[9]**

Q3) a) Explain in brief the edge linking in case of image segmentation. **[9]**

b) Enlist the different types of classifiers. Explain any one in detail. **[9]**

OR

Q4) a) What is edge discontinuities. Explain in detail. **[9]**

b) Explain the different methods for edge detection. **[9]**

Q5) a) Write a short note on Huffman coding. **[9]**

b) What the need of image compression. Explain different methods in short. **[9]**

OR

P.T.O.

Q6) a) Compare Lossy and lossless compression. **[9]**

b) Explain LZW compression in detail. **[9]**

Q7) a) Explain the fingerprint verification using image processing. **[8]**

b) How image processing is used in military application? Explain with neat diagram. **[9]**

OR

Q8) a) Explain the application in image processing in agriculture field. **[8]**

b) Write a short note on application of image processing in space. **[9]**

Total No. of Questions : 8]

SEAT No. :

P-6651

[Total No. of Pages : 2

[6181]-215

B.E. (Instrumentation & Control)

DATA ANALYTICS

(2019 Pattern) (Semester - VII) (406263B) (Elective - III)

Time : 2½ Hours] *[Max. Marks : 70*

Instructions to the candidates:

1) ***All questions are compulsory.***
2) ***Neat diagram must be drawn wherever necessary.***
3) ***Figures to the right indicate full marks.***
4) ***Use of Logarithmic tables, electronic Pocket calculator and steam table is allowed.***
5) ***Assume suitable data if necessary.***

Q1) a) Explain in detail about a-priori algorithm with its flow chart. **[8]**

b) Describe the various regression techniques in detail. **[9]**

OR

Q2) a) Illustrate Association rules with example. **[8]**

b) What is logistic regression explain it with example. **[9]**

Q3) a) Define following terms : **[10]**

i) Concept of classification

ii) Bayesian classifier

b) Explain about Decision Trees in detail. **[8]**

OR

Q4) a) How evaluation is performed on Decision Trees. **[8]**

b) Describe Naïve Bayes classification with example. **[10]**

Q5) a) Write short note on : **[10]**

i) Tools used in data visualization.

ii) Analytical techniques used in Big data visualization.

b) List out challenges to Big data visualization. **[8]**

P.T.O.

OR

Q6) a) Why is data visualization important? How do you use data visualization to make better decisions? **[8]**

b) Demonstrate techniques for visual data representations. **[10]**

Q7) a) Illustrate the Hadoop core components with neat diagram. **[8]**

b) Illustrate main features and Architecture of Hive with neat diagram. **[9]**

OR

Q8) a) Discuss the NoSQL data stores and their characteristic features. **[8]**

b) Describe the MapReduce execution steps with neat diagram. **[9]**

⌘⌘⌘

Total No. of Questions : 8]

SEAT No. :

P-6652

[Total No. of Pages : 2

[6181]-216

B.E. (Instrumentation & Control)

WIRELESS SENSOR NETWORKS

(2019 Pattern) (Semester - VII) (406263C) (Elective - III)

Time : 2½ Hours] ***[Max. Marks : 70***

Instructions to the candidates:

1) ***Answer Q1 or Q2, Q3 or Q4, Q5 or Q6, Q7 or Q8.***
2) ***Neat diagrams must be drawn wherever necessary.***
3) ***Figures to the right side indicate full marks.***
4) ***Assume suitable data if necessary***

Q1) a) Define MAC protocol. Define Sensor-MAC protocol and Define Zebra-MAC protocol. **[9]**

b) Define the concept of Routing Protocol. Explain in detail Low-Energy Adaptive Clustering Hierarchy (LEACH) protocol. **[9]**

OR

Q2) a) What are the fundamentals of MAC Protocols? List the performance requirements of MAC protocol. List out the various types of MAC protocol. **[9]**

b) What are the performance requirements of Routing Protocols for Wireless Sensor Networks? With neat sketch explain in detail Geographical routing. **[9]**

Q3) a) Differentiate Transmission Control Protocol (TCP) Vs User Datagram Protocol (UDP). **[9]**

b) Explain the role of ESRT (Event-to-Sink Reliable Transport) in transport control protocol. **[8]**

OR

Q4) a) List the existing transport control protocols. Elaborate the CODA (Congestion Detection and Avoidance) system in transport control protocol. **[9]**

b) Explain the feasibility of using Transport Control Protocol (TCP) for wireless sensor network. **[8]**

P.T.O.

Q5) a) Draw and explain the Middleware architecture for wireless sensor network. **[9]**

b) What is the significance of Middleware IrisNet (Internet-Scale Resource Intensive Sensor Networks Services) in wireless sensor network. **[9]**

OR

Q6) a) Explain with neat sketch Middleware MiLAN (Middleware Linking Applications and Networks) for wireless sensor network. **[9]**

b) Define Middleware for wireless sensor network. What is the principle of Middleware? Give the significance of middleware in wireless sensor network. **[9]**

Q7) a) What are the network security requirements in Ad Hoc wireless network? **[9]**

b) Define the concept of security attack. Elaborate layer wise attack in wireless sensor network. **[8]**

OR

Q8) a) Explain with neat sketch the tampering black hole attack. What are the various sensor network platforms for wireless sensor network? **[9]**

b) Suggest what are the secure SPINS reliability requirements in sensors networks? **[8]**

Total No. of Questions : 8]

SEAT No. : ____

P6653

[Total No. of Pages : 2

[6181] - 217

B.E. (Instrumentation & Control)

PROCESS MODELLING AND OPTIMIZATION

(2019 Pattern) (Semester - VII) (406263 - D) (Elective - III)

Time : 2 ½ Hours] ***[Max. Marks : 70***

Instructions to the candidates:

1) ***Answer Q.1 or Q.2, Q.3 or Q.4, Q.5 or Q.6, Q.7 or Q.8.***
2) ***Neat diagrams must be drawn wherever necessary.***
3) ***Figures to the right indicate full marks.***
4) ***Use of logarithmic tables, slide rule, Mollier charts, electronic Pocket calculator and steam tables is allowed.***
5) ***Assume suitable data, if necessary.***

Q1) a) Explain offline and online identification of process. **[9]**

b) Explain prediction error methods for identification. **[8]**

OR

Q2) a) Explain eyeball fitting method for identification. **[9]**

b) Explain relationship between time, Laplace and frequency domain **[8]**

Q3) a) Determine the stability of a 2 × 2 process with a diagonal feedback controller given as: **[10]**

$$G_m = \begin{bmatrix} 2 & 4 \\ 3 & 4 \end{bmatrix} \text{ and } B_s = \begin{bmatrix} 1 & 3 \\ 4 & 5 \end{bmatrix}$$

b) Explain relative gain array. **[8]**

OR

Q4) a) Explain Inverse Nyquist Array and it's application in analysis of multivariable system. **[8]**

P.T.O.

b) For the system given Find NI for this comment on stability also find proper paring of control and manipulated variables. **[10]**

$$\begin{bmatrix} X \\ Y \end{bmatrix} = \begin{bmatrix} 2\dfrac{e^{-3s}}{(2s+1)} & 15\dfrac{e^{-2s}}{(4s+1)} \\ 2\dfrac{e^{-6s}}{(6s+1)} & \dfrac{e^{-2s}}{(3s+1)} \end{bmatrix} \begin{bmatrix} P \\ Q \end{bmatrix}$$

Q5) a) Explain extremum of objective function. **[8]**

b) Explain optimization component of optimization statement with suitable example. **[9]**

OR

Q6) a) Explain Convex and Concave functions with proper example and it's roll in optimization. **[8]**

b) For the functions given below, analyze the concavity and convexity in each case. **[9]**

i) $f(x_1, x_2) = (x_1 - x_2)^2 + x_2$

ii) $f(x) = x_1^{\,2} + 4x_1x_2 + x_1 + x_2 + 3$

iii) $f(x) = 5x + 3x^2 + 4x^3$

Q7) a) Determine the optimum values of *x*l & *x*2 for the function. **[10]**

$$y = \frac{x_1^2}{4} + \frac{8}{x_1x_2} + 2x_2$$

and state whether point is minimum or maximum

b) Explain Quasi Newton method for optimization. **[8]**

OR

Q8) a) Explain region elimination method. **[9]**

b) Explain simplex method of optimization. **[9]**



Total No. of Questions : 8]

SEAT No. :

P-8694

[Total No. of Pages : 2

[6181]-218A

B.E. (Instrumentation & Control)

CLOUD COMPUTING

(2019 Pattern) (Semester - VII) (406264A) (Elective - IV)

Time : 2½ Hours] *[Max. Marks : 70*

Instructions to the candidates:

1) ***Answer Q.1 or Q.2, Q.3 or Q.4, Q.5 or Q.6, Q.7 or Q.8.***
2) ***Neat diagrams must be drawn wherever necessary.***
3) ***Figures to the right side indicate full marks.***
4) ***Assume suitable data if necessary.***

Q1) a) Analyze the standards used by application developers in detail. **[9]**

b) How hypervisor are works in cloud computing. **[9]**

OR

Q2) a) Justify "Virtualization is the wave of the future". Explicate the process of CPU, memory and I/O device virtualization in data center. **[9]**

b) How virtualization can be implemented in the multi-core processors. **[9]**

Q3) a) Summarize the commonly used services provided by AWS? **[9]**

b) Analyze the amazon elastic block store. List its various benefits? **[8]**

OR

Q4) a) Summarize the steps to create EBS volume snapshot. **[9]**

b) Comment on the performance expectations by customer on Elastic Block Storage. **[8]**

Q5) a) Illustrate the significance of RFID in IoT with suitable system architecture features and advantages. **[9]**

b) Justify "Zigbee technology in one of the enabling technologies for IoT". **[9]**

OR

P.T.O.

Q6) a) Comment on Ubiquitous system challenges and outlook. **[9]**

b) Elaborate the Cyber Physical System (CPS) and their components. **[9]**

Q7) a) Elaborate the docker deployment workflow with diagram. **[9]**

b) Comment on : **[8]**

i) Mobile Cloud Computing.

ii) Jungle Computing.

OR

Q8) a) Sketch the architecture of mobile cloud computing. **[9]**

b) Elaborate the docker with respect to process simplification, Broad support and Adoption, architecture. **[8]**

⌘⌘⌘

Total No. of Questions : 8]

SEAT No. :

P-6655

[Total No. of Pages : 2

[6181]-219

B.E. (Instrumentation & Control)

SOFT COMPUTING

(2019 Pattern) (Semester - VII) (406264B) (Elective - IV)

Time : 2½ Hours] *[Max. Marks : 70*

Instructions to the candidates:

1) ***Answer Q1 or Q2, Q3 or Q4, Q5 or Q6, Q7 or Q8.***
2) ***Neat diagrams must be drawn wherever necessary.***
3) ***Figures to the right side indicate full marks.***
4) ***Assume suitable data if necessary***

Q1) a) Difference between Crisp Set and Fuzzy Set. **[8]**

b) For the following fuzzy sets, find Union, Intersection and Complement operation **[9]**

A = { (x1, 0.2), (x2, 0.5), (x3, 0.6), (x4, 0.8), (x5, 1.0) }

B = { (x1, 0.8), (x2, 0.6), (x3, 0.4), (x4, 0.2), (x5, 0.1) }

OR

Q2) a) What is Fuzzy Logic? State the advantages & disadvantages of Fuzzy Logic. **[8]**

b) Explain the following properties in Fuzzy Sets **[9]**

i) Commutativity

ii) Associativity

iii) Demorgan's Law

Q3) a) Explain the Fuzzy Inference system with a labeled block diagram. **[8]**

b) What is membership function? **[9]**

For given values, a = 2, b = 6 and c = 10, compute the fuzzy value corresponding to x = 8.

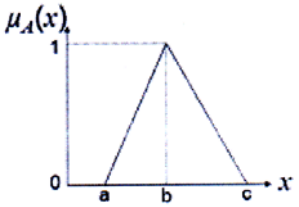

P.T.O.

OR

Q4) a) What is Fuzzy implication? Explain with example. **[8]**

b) What is the purpose of Defuzzification? Explain any one method of Defuzzification. **[9]**

Q5) a) Appraise the fuzzy system for speed control in Smart Car. **[9]**

b) Explain a Fuzzy Logic Control System with an example. **[9]**

OR

Q6) a) Discuss on the static and dynamic properties of Fuzzy Controller. **[9]**

b) Construct a Fuzzy Controller with a suitable block diagram for a washing machine application. **[9]**

Q7) a) Elaborate the Neuro-Fuzzy method to learn fuzzy classification rules from data. **[9]**

b) Explain the architecture of Neuro-Fuzzy system with a labeled diagram. **[9]**

OR

Q8) a) What is the need to use Fuzzy Logic in Neural Network? Mention a commercial example of Neural trained Fuzzy System. **[9]**

b) Write a note on Fuzzified CMAC based self-learning controllers. **[9]**

Total No. of Questions : 8]

SEAT No. :

P-6656

[Total No. of Pages : 2

[6181]-220

B.E. (Instrumentation & Control)

AUTOMOTIVE INSTRUMENTATION

(2019 Pattern) (Semester - VII) (406264 C) (Elective - IV)

Time : 2½ Hours] ***[Max. Marks : 70***

Instructions to the candidates :

1) ***Answer Q.1 or Q.2, Q.3 or Q.4, Q.5 or Q.6, Q.7 or Q.8.***
2) ***Neat diagrams must be drawn wherever necessary.***
3) ***Figures to the right side indicate full marks.***
4) ***Use of Calculator is allowed.***
5) ***Assume Suitable data if necessary.***

Q1) a) Explain the pre-collision and break assist system in vehicle. **[10]**

b) Sate the active safety features. Explain lane departure alert mechanism with neat diagram. **[8]**

OR

Q2) a) Explain the instrumentation in dynamic radar cruise control system in vehicle. **[9]**

b) Describe the mechanism to make head light beam high and low automatically in vehicles with diagram. **[9]**

Q3) a) Explain in detail the application of CAN-FD network in vehicle with its architecture. **[9]**

b) Describe the application of Media Oriented Systems Transport (MOST) Protocol. **[8]**

OR

Q4) a) Explain EV charging industry standards and protocols. **[9]**

b) Write a short note on automotive industry standards. **[8]**

P.T.O.

Q5) a) Explain DC converter and inverter in automotive with suitable circuit diagram. **[8]**

b) What is electromobility. Explain electrical motor topologies. **[10]**

OR

Q6) a) Explain in detail the components of power trains in electric vehicle. **[9]**

b) Draw and explain the block diagram of wireless EV charging system.**[9]**

Q7) a) State the advantages of IOT in automotive. Explain vehicle to vehicle (V2V) communication technology in detail. **[9]**

b) With the help of neat block diagram, Explain the working of Vehicle to pedestrians (V2P) system. **[8]**

OR

Q8) a) State the advantages of IOT in automotive. Explain vehicle to infrastructure (V2I) communication network in vehicles. **[9]**

b) Explain Vehicle to network (V2N) communication network in vehicles.**[8]**

▽▽▽▽

Total No. of Questions : 8]

SEAT No. : ____

P-6657

[Total No. of Pages : 3

[6181]-221

B.E. (Instrumentation & Control)

ADVANCED CONTROL SYSTEMS

(2019 Pattern) (Semester - VII) (406264D) (Elective - IV)

Time : 2½ Hours] ***[Max. Marks : 70***

Instructions to the candidates :

1) ***Answers Q1 or Q2, Q3 or Q4, Q5 or Q6, Q7 or Q8.***
2) ***Neat diagrams should be drawn wherever necessary.***
3) ***Use of Non-programmable Calculator is allowed.***
4) ***Assume suitable data if necessary.***

Q1) a) Derive the expression for the Pulse Transfer Matrix. **[8]**

b) Find the state transition matrix for the system with the state equation as, **[9]**

$$x(k+1)=\begin{pmatrix} 0 & 1 \\ -0.32 & -1.2 \end{pmatrix}x(k)$$

OR

Q2) a) Define the following terms. **[6]**

i) State

ii) State Variable

iii) State Space

iv) State Vector.

b) For the given state model find the pulse transfer function, **[11]**

$$x(k+1)=\begin{bmatrix} 0 & 0 & -0.25 \\ 1 & 0 & 0 \\ 0 & 1 & 0.5 \end{bmatrix}x(k)+\begin{bmatrix} 0 \\ 0 \\ 1 \end{bmatrix}u(k)$$

$$y(k)=\begin{bmatrix} 1 & 0 & 1 \end{bmatrix}x(k)$$

P.T.O.

Q3) a) Define state controllability, state observability and output controllability. **[6]**

b) Find the state controllability and state observability for the given system. **[12]**

$$x(k+1)=\begin{bmatrix} 0 & 1 \\ -18 & -5 \end{bmatrix}x(k)+\begin{bmatrix} 1 \\ 1 \end{bmatrix}u(k)$$

$$y(k)=\begin{bmatrix} -2 & 3 \end{bmatrix}x(k)$$

OR

Q4) a) Write short notes on: **[6]**

i) State Observers.

ii) State Variable feedback gain matrix

b) Find the state feedback gain matrix for the system having the pole locations on -0.7 ± 0.6, **[12]**

$$x(k+1)=\begin{bmatrix} 0 & 1 \\ -16 & -2 \end{bmatrix}x(k)+\begin{bmatrix} 1 \\ 1 \end{bmatrix}u(k)$$

Q5) a) Explain the following terms: **[9]**

i) Positive definiteness.

ii) Positive semi-definiteness.

iii) Negative definiteness.

b) Determine the stability of the equilibrium state of the following system using Lyapunov method, **[8]**

$$\dot{x}=\begin{bmatrix} -1 & 2 \\ -1 & -6 \end{bmatrix}x(t)$$

OR

Q6) a) Explain the Lyapunov's direct and second method for stability analysis of Continuous and Discrete Time LTI systems. **[9]**

b) Determine the stability of the equilibrium state of the following system using Lyapunov method, **[8]**

$$\begin{bmatrix} x_1(k+1) \\ x_2(k+2) \end{bmatrix}=\begin{bmatrix} 0 & 1 \\ -1.5 & -3 \end{bmatrix}\begin{bmatrix} x_1 & (k) \\ x_2 & (k) \end{bmatrix}$$

Q7) a) Explain the characteristics of non-linear systems. **[9]**

b) Explain the concept of describing function and use of the describing function of ideal relay. **[9]**

OR

Q8) a) List out the common non-linearities. Explain any three. **[9]**

b) Write a short note on stability analysis using describing function. **[9]**



Total No. of Questions : 8]

SEAT No. :

P-6658

[Total No. of Pages : 2

[6181]-222

B.E. (Instrumentation & Control)

PROCESS INSTRUMENTATION

(2019 Pattern) (Semester - VIII) (406268)

Time : 2½ Hours] ***[Max. Marks : 70***

Instructions to the candidates:

1) ***Answer Q1 or Q2, Q3 or Q4, Q5 or Q6, Q7 or Q8.***
2) ***Neat diagrams must be drawn wherever necessary.***
3) ***Figures to the right side indicate full marks.***
4) ***Assume Suitable data, if necessary.***
5) ***Use of calculator is allowed.***

Q1) a) Develop feedback control strategy for accumulator level control in distillation column. **[7]**

b) Develop feedback control scheme for top product composition control in distillation. **[10]**

OR

Q2) a) Identify process variables, control variables and manipulated variables in Distillation column. **[7]**

b) Develop inferential control for composition control of distillate. **[10]**

Q3) a) Develop feedback control strategy for single-effect evaporators. **[7]**

b) Develop cascade control scheme for dryer control. **[10]**

OR

Q4) a) Develop suitable cascade control strategy for multi-effect evaporators.**[7]**

b) Develop control strategy used in spray dryer with neat control diagram. **[10]**

P.T.O.

Q5) a) Develop time sequence diagram for batch reactor control. **[8]**

b) Develop feedback control strategy for temperature control in exothermic reactors with neat diagram. **[10]**

OR

Q6) a) Comment on recipe, formula, lot and procedure **[8]**

b) Develop temperature on flow cascade control strategy for temperature control in endothermic reactors with neat diagram. **[10]**

Q7) a) Develop on-off level control in dual pump station. **[8]**

b) Elaborate surge phenomenon with neat sketch. **[10]**

OR

Q8) a) Develop appropriate controller for multiple pump control. **[8]**

b) Develop control logic for on-off control of a standalone compressor. **[10]**

Total No. of Questions : 8]

SEAT No. :

P-7860

[Total No. of Pages : 2

[6181]-223

B.E. (Instrumentation & Control)

ADVANCED EMBEDDED SYSTEM

(2019 Pattern) (Semester - VIII) (406269)

Time : 2½ Hours] ***[Max. Marks : 70***

Instructions to the candidates:

1) ***Answer Q1 or Q2, Q3 or Q4, Q5 or Q6, Q7 or Q8.***
2) ***Neat diagrams must be drawn wherever necessary.***
3) ***Figures to the right side indicate full marks.***
4) ***Assume Suitable data, if necessary.***

Q1) a) Draw a neat block diagram of UART and elaborate its operation in brief. **[9]**

b) Describe the external interrupts of ARM7 LPC2148. **[8]**

OR

Q2) a) Write a short note on memory mapping ARM-7 processors. **[9]**

b) Draw and explain block diagram of DAC in ARM7. **[8]**

Q3) a) Draw a neat block diagram and elaborate Vector Interrupt Controller (VIC). **[9]**

b) Draw the neat interfacing diagram and elaborate the operation of On-Chip (Internal) ADC interfacing with LPC2 148. **[9]**

OR

Q4) a) Draw a neat block diagram and describe Standard Interrupt Controller (SIC). **[9]**

b) Draw the neat interfacing diagram and elaborate the operation of DC motor interfacing with LPC2148. **[9]**

P.T.O.

Q5) a) Differentiate between ARM and THUMB programming. **[9]**

b) Describe the function of END, DCD, CODE 16 and DATA assembler directives. **[8]**

OR

Q6) a) Elaborate the operation of THUMB Interworking. **[9]**

b) Elaborate register usage in thumb. Justify how code density will be improved using Thumb. **[8]**

Q7) Develop an application for IoT based elevator system using LPC2148. **[18]**

OR

Q8) It is decided to design SMART home automation system. Identify different parameters for home automation system. Develop the system using LPC2 148 ARM-7 microcontroller to display the parameters on LCD display. Provide the facility to communicate the information through SMS. For this system

a) Identify different parameters for health monitoring system. **[3]**

b) Enlist selected sensors. **[3]**

c) Develop block diagram. **[4]**

d) Elaborate the operation of the system with respect to block diagram. **[4]**

e) Develop the algorithm for the system. **[4]**

Total No. of Questions : 8]

SEAT No. :

P-6659

[Total No. of Pages : 2

[6181]-224

B.E. (Instrumentation & Control)

ELECTRIC VEHICLES

(2019 Pattern) (Semester - VII) (406270A) (Elective - V)

Time : 2½ Hours] *[Max. Marks : 70*

Instructions to the candidates :

1) ***Answers Q1 or Q2, Q3 or Q4, Q5 or Q6, Q7 or Q8.***
2) ***Neat diagrams must be drawn wherever necessary.***
3) ***Assume suitable data if necessary.***

Q1) a) Draw the configuration and control of Induction Motor drives and brief. **[9]**

b) Describe the configuration and control of Permanent Magnet Motor drives. **[9]**

OR

Q2) a) Explain configuration and control of Switch Reluctance Motor drives. **[9]**

b) Examine the drive system efficiency. **[9]**

Q3) a) Explain Fuel Cell based energy storage. **[9]**

b) Explain the matching of electric machine and the internal combustion engine (ICE). **[9]**

OR

Q4) a) Derive & explain calculation for the rating. **[9]**

b) Flywheel based energy storage. **[9]**

Q5) a) Write a note on:Case study of 2-wheeler vehicles in EVs. **[9]**

b) Explain Range modelling for Fuel Cell EV. **[9]**

OR

P.T.O.

Q6) a) Discuss Range Modelling for: Solar Powered Vehicles. **[9]**

b) Interpret Case study of 3- wheeler in EVs. **[9]**

Q7) a) List & explain the various charging techniques. **[8]**

b) Sketch the schematic of charging stations & explain. **[8]**

OR

Q8) a) Analyze implementation issues of energy management strategies. **[8]**

b) Differentiate different energy management strategies. **[8]**

Total No. of Questions : 8]

SEAT No. :

P-6660

[Total No. of Pages : 2

[6181]-225

B.E. (Instrumentation & Control)

SAFETY INSTRUMENTATION SYSTEM

(2019 Pattern) (Semester - VIII) (Elective - V) (406270 B)

Time : 2½ Hours] ***[Max. Marks : 70***

Instructions to the candidates:

1) ***Attempt Q.1 or Q.2, Q.3 or Q.4, Q.5 or Q.6, Q.7 or Q.8.***
2) ***Neat diagrams must be drawn wherever necessary.***
3) ***Figures to the right indicate full marks.***
4) ***Assume suitable data if necessary.***

Q1) a) Discuss the different factors of prevention layer of risk. **[9]**

b) Describe the Safety requirements specifications (SRS) in detail. **[9]**

OR

Q2) a) Elaborate the Mitigation layer of risk. **[9]**

b) Define the Scrubbers and Flares? Describe with neat block diagram the Wet Scrubber process. **[9]**

Q3) a) Define the Safety Integrity Level (SIL) and how is it used to manage risk in industrial processes? **[9]**

b) Describe the Risk Graph of SIL determination method with neat diagrams. **[9]**

OR

Q4) a) Discuss some common challenges and limitations associated with determining and verifying SIL levels in practice? **[9]**

b) Examine the Layer of Protection Analysis (LOPA) assessment with neat block diagram. **[9]**

P.T.O.

Q5) a) Describe the failure rate with the help of Bathtub curve. **[8]**

b) Discuss the Life expectancy of the equipment. **[9]**

OR

Q6) a) Describe how Reliability Block Diagrams can be used for modeling. **[8]**

b) Elaborate the Fault Tree analysis with the help of block diagram. **[9]**

Q7) a) Describe the Installation, Commissioning and Pre-startup Tests. **[8]**

b) Elaborate the Lifecycle Cost Analysis of a furnace/fired heater. **[9]**

OR

Q8) a) Discuss the Operation and Maintenance Procedures for safe operation. **[8]**

b) Elaborate SIS Conceptual Design guidelines in details. **[9]**

Total No. of Questions : 8]

SEAT No. :

P-6661

[Total No. of Pages : 2

[6181]-226

B.E. (Instrumentation and Control)

RENEWABLE ENERGY SYSTEMS

(2019 Pattern) (Semester - VIII) (406270C) (Elective - V)

Time : 2½ Hours] *[Max. Marks : 70*

Instructions to the candidates:

1) ***Solve Q.1 or Q.2, Q.3 or Q.4, Q.5 or Q.6, Q.7 or Q.8.***
2) ***Figures to the right side indicate full marks.***
3) ***Neat diagrams must be drawn wherever necessary.***
4) ***Use of Calculator is allowed.***
5) ***Assume Suitable data if necessary.***

Q1) a) Elaborate the advantages of energy storage system in renewable system Elaborate the working of Super Capacitor with neat diagram. **[10]**

b) Elaborate the working of Lithium Ion Rechargeable battery with neat diagram. **[7]**

OR

Q2) a) State the significance of batteries in Renewable System. Elaborate on the charging technique for batteries with neat diagram. **[10]**

b) Elaborate the working of Fuel Cell with neat diagram. **[7]**

Q3) a) State the significance of energy metering in Renewable System. Elaborate on the working of energy metering and monitoring system with neat diagram. **[10]**

b) Elaborate on Series and Parallel connection of Solar Panel with diagram. **[8]**

OR

Q4) a) State the significance of power converters in solar photovoltaic system. Elaborate on the working of any one type of power converter used in renewable system with neat diagram. **[10]**

b) Compare Isolated and Non Isolated type of solar Photovoltaic system. **[8]**

P.T.O.

Q5) a) State the applications of Renewable Energy. Explain the working of Solar water heater with neat diagram. **[10]**

b) Elaborate on the working of solar street lamp with neat diagram. **[7]**

OR

Q6) a) State the significance of solar power generation. Elaborate on the working of solar power generation plant with neat diagram. **[10]**

b) Elaborate on the working of solar power UPS with neat diagram. **[7]**

Q7) a) State the significance of wind energy. Describe the wind energy conversion technology with neat diagram. **[10]**

b) Draw and explain the working of wind + diesel wind energy system. **[8]**

OR

Q8) a) State the significance of hybrid wind energy system. Draw and explain the working of wind + photovoltaic wind energy system. **[10]**

b) Elaborate the concept of Wind farm with neat diagram. **[8]**

⌘⌘⌘

Total No. of Questions : 8]

SEAT No. :

P-6662

[Total No. of Pages : 2

[6181]-228

B.E. (Instrumentation & Control Engineering)

CYBER SECURITY

(2019 Pattern) (Semester - VIII) (406271A) (Elective - VI)

Time : 2½ Hours] ***[Max. Marks : 70***

Instructions to the candidates:

1) ***Answer Q.1 or Q.2, Q.3 or Q.4, Q.5 or Q.6, Q.7 or Q.8.***
2) ***Neat diagrams must be drawn wherever necessary.***
3) ***Figures to the right side indicate full marks.***
4) ***Use of Calculator is allowed.***
5) ***Assume Suitable data if necessary.***

Q1) a) Describe in brief elliptic curve cryptography. **[10]**

b) Explain Diffie-Hellman key exchange algorithm. **[8]**

OR

Q2) a) Explain in detail RSA algorithm along with its advantages and disadvantages. **[10]**

b) Explain cryptographic hash functions. **[8]**

Q3) a) Explain Needham Schroeder algorithm and Kerberos. **[9]**

b) Explain Firewall: Different types and functionalities. **[8]**

OR

Q4) a) Explain IP Security: lPv6 and IPSec. **[9]**

b) Explain Web Security: SSL, HTTPS. **[8]**

Q5) a) Explain quantitative vs. qualitative risk control practices. **[10]**

b) Explain classification of cybercrimes. **[8]**

OR

P.T.O.

Q6) a) Explain cloud computing and cybercrime. **[10]**

b) Describe risk identification, risk assessment, risk control strategies in detail. **[8]**

Q7) a) Explain windows forensic analysis. **[9]**

b) Explain document forensics. **[8]**

OR

Q8) a) Explain cyber crime investigation. **[9]**

b) Explain mobile forensics. **[8]**

⌘⌘⌘

Total No. of Questions : 8]

SEAT No. :

P-6663

[Total No. of Pages : 2

[6181]-229

B.E. (Instrumentation & Control)

AUTOMATION IN AGRICULTURE

(2019 Pattern) (Semester - VIII) (406271B) (Elective - VI)

Time : 2½ Hours] ***[Max. Marks : 70***

Instructions to the candidates:

1) ***Answer Q1 or Q2, Q3 or Q4, Q.5 or Q.6, Q.7 or Q.8.***
2) ***Neat diagram mast be drawn whenever necessary.***
3) ***Figures to the right candidates indicate fall marks.***
4) ***Use of logarithmic tables slide rule, mollier charts, electronic pocket calculator and steam table is allowed.***
5) ***Assume suitable data, if necessary.***

Q1) a) Enlist various sensors used in a Green house. Explain any two of them in detail. **[8]**

b) What are the various heating and cooling methodologies used in green house. **[9]**

OR

Q2) a) Explain following techniques for Soil Moisture Measurement : Gypsum Block and thermal based method. **[8]**

b) Explain the need of irrigation in India. Explain Micro-irrigation in detail. **[9]**

Q3) a) Explain the Process Flow Diagram for Distillery Plant. **[10]**

b) Draw the Process Flow Diagram for a Sugar Plant. **[8]**

OR

Q4) a) With a neat diagram explain the process for manufacturing various Diary Products. **[10]**

b) Explain the automation used in Juice Extraction in a Sugar Factory. **[8]**

P.T.O.

Q5) a) Explain the International Code of hygiene for various Food Products. **[9]**

b) Write a short note on Food Safety and Standards Bill 2005. **[8]**

OR

Q6) a) Write a short note on : Biosensors. **[5]**

b) Write a short note on : BIS Standards. **[5]**

c) Explain various design considerations for Cold Storage. **[7]**

Q7) a) Explain various trends in modern food industry. **[8]**

b) Enlist various equipments used for creating and maintaining the controlled atmosphere. Explain any two equipments in detail. **[10]**

OR

Q8) a) Explain the use of modern Instrumentation techniques in the Food industry. **[10]**

b) Explain various applications of Controlled Atmosphere Storage. **[8]**



Total No. of Questions : 8]

SEAT No. :

P-6664

[Total No. of Pages : 2

[6181]-230

B.E. (Instrumentation and Control)

ENVIRONMENTAL INSTRUMENTATION

(2019 Pattern) (Semester - VIII) (Elective - VI) (406271C)

Time : 2½ Hours] ***[Max. Marks : 70***

Instructions to the candidates :

1) ***Solve Q.1 or Q.2, Q.3 or Q.4, Q.5 or Q.6, Q.7 or Q.8.***
2) ***Figures to the right side indicate full marks.***
3) ***Neat diagrams must be drawn wherever necessary.***
4) ***Use of calculator is allowed.***
5) ***Assume suitable data if necessary.***

Q1) a) Discuss settling tank dynamics in details. **[10]**

b) Which engineering instruments are used for sedimentation process and associated process? **[7]**

OR

Q2) a) How ground water monitoring will help your district? - Discuss in detail. **[10]**

b) How will the soil contamination will be reduced? Discuss a specific example. **[7]**

Q3) a) Discuss waste water treatment in context to a hospital OR a cosmetic industry in details. **[10]**

b) How waste water mixing in river has dangerous effects from industrial waste-discuss. **[8]**

OR

Q4) a) Discuss in detail waste water treatment instrumentation. **[10]**

b) Discuss role of NGOs in rain water harvesting in your city or state. **[8]**

P.T.O.

Q5) a) Which different parameters hamper energy-environment relation-discuss in details. **[10]**

b) Discuss different air pollutants-list-what is their impact on health? **[7]**

OR

Q6) a) Discuss a sensor working principle for any air pollutant. How will you expand its sensing for advanced instrumentation for monitoring? **[10]**

b) Control of air or noise pollution - write a detailed note on. **[7]**

Q7) a) How will you design a weather station for your institution - elaborate - which instruments you will choose, website display-which parameters will you show, how many updates? **[10]**

b) Comment on global environmental analysis. **[8]**

OR

Q8) a) How virtual instrumentation in environmental engineering is useful - discuss with an example. **[10]**

b) Discuss REMS Rover Environmental Monitoring Station or equivalent instruments used by India. **[8]**

▽▽▽▽

Total No. of Questions : 8]

SEAT No. :

P-6665

[Total No. of Pages : 5

[6181]-231

B.E. (Mechanical)

HEATING, VENTILATION, AIR CONDITIONING AND REFRIGERATION

(2019 Pattern) (Semester - VII) (402041)

Time : 2½ Hours] ***[Max. Marks : 70***

Instructions to the candidates:

1) ***Solve Q1 or Q2, Q3 or Q4, Q5 or Q6, Q7 or Q8.***
2) ***Neat diagrams must be drawn wherever necessary.***
3) ***Figures to the right side indicate full marks.***
4) ***Use of scientific calculator is allowed.***
5) ***Assume Suitable data, if necessary.***

Q1) a) Explain with a neat sketch Thermostatic Expansion Valve. **[6]**

b) Explain with a neat sketch Low Pressure (LP) cut off used in VCR cycle. **[6]**

c) Distinguish between the air cooled and water cooled condensers. **[5]**

OR

Q2) a) Explain with neat sketch flooded type evaporator. **[6]**

b) Explain with neat schematic the frost control circuit used in VCR cycle. **[6]**

c) Explain with neat schematic CO_2 transcritical cycle. **[5]**

Q3) a) Explain load calculations factors for air conditioning. **[8]**

b) Atmospheric air at 30°C dry bulb temperature and 75% relative humidity, enters a cooling coil at a rate of 200 m^3/min. The coil dew point temperature is 14°C and the by-pass factor of the coil is 0.1. Determine : **[10]**

i) The temperature of air leaving the cooling coil;

ii) The capacity of the cooling coil in TR and in kW;

iii) The amount of water vapour removed per minute; and

iv) The sensible heat factor for the process.

P.T.O.

OR

Q4) a) Explain the terms : **[9]**

i) GRSHF

ii) BPF

iii) ERSHF

b) A conference room for sitting 100 persons is to be maintained at 22°C DBT and 60% relative humidity. The outdoor conditions are 40°C DBT and 27°C WBT. The various loads in the auditorium are as follows : **[9]**

i) Sensible and latent heat loads per person 80 W and 50 W respectively;

ii) Lights and fans, 15000 W;

iii) Sensible heat gain through glass ceiling etc. 15000W.

iv) The air infiltration is 20 m^3/min and fresh air supply is 100 m^3/min.

v) Two-third of recirculated room air and one-third of fresh air are mixed before entering the cooling coil.

vi) The bypass factor of the coil is 0.1.

Determine :

a) Apparatus dew point,

b) Grand total heat load and

c) Effective room sensible heat factor

Q5) a) What is infiltration and Ventilation? What are different Methods of Infiltration? **[8]**

b) A circular duct of ϕ400 mm is selected to carry air at a velocity 440 m/min. If duct is replaced by rectangular duct of aspect ratio 1.5. Find the size of rectangular duct for equal friction when; **[10]**

i) Velocity in two Duct is same.

ii) Discharge in two Duct is same.

If f = 0.015, Find the pressure loss per 100m length of Duct. Take density of air = 1.15 kg/m^3.

OR

Q6) a) Explain Natural Ventilation and Mechanical Ventilation. **[8]**

b) Using Equal friction method, determine the duct diameter and velocity for section AB, BD and BC. Assume velocity in the main duct AB = 600 m/min. Also Calculate maximum pressure drop in the duct system. Distance AB = 30 m, Distance BC = 30 m and Distance BD = 10 m. Refer the figure as given below. **[10]**

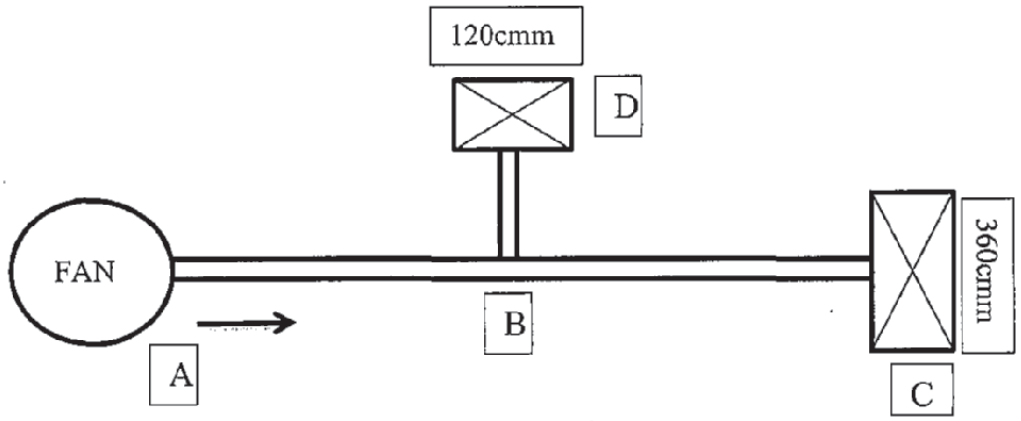

Q7) a) Explain with neat sketch winter Air conditioning system. **[6]**

b) Draw and Explain water to water heat pump circuit. **[6]**

c) Write a short note on solid packed tower. **[5]**

OR

Q8) a) Explain with neat sketch All water system. **[6]**

b) Write a short note on Sorbents and Desiccants. **[6]**

c) Write a short note on Radiant cooling. **[5]**

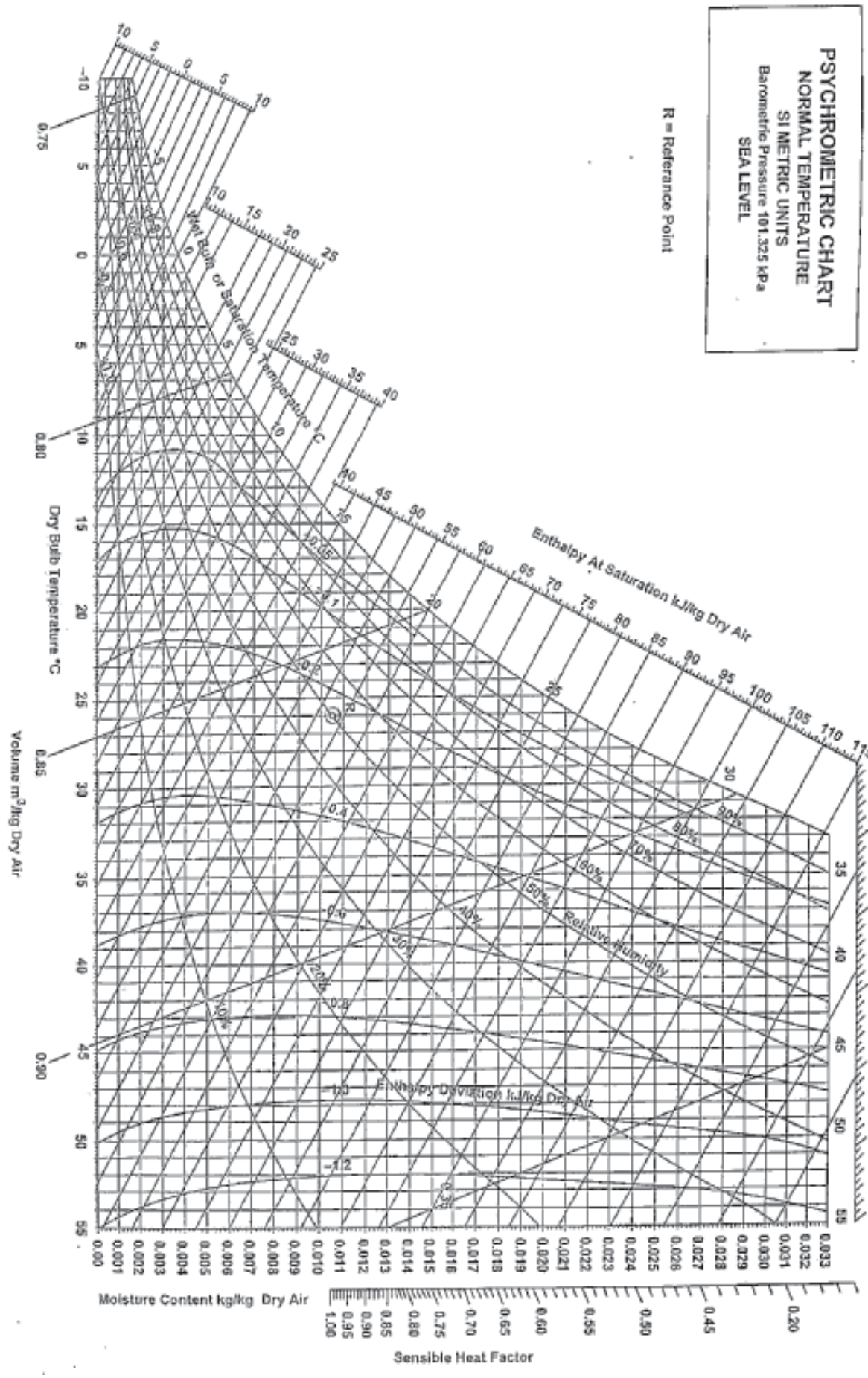
PSYCHROMETRIC CHART
NORMAL TEMPERATURE
SI METRIC UNITS
Barometric Pressure 101.325 kPa
SEA LEVEL
R = Reference Point
Wet Bulb or Saturation Temperature °C
Dry Bulb Temperature °C
Enthalpy At Saturation kJ/kg Dry Air
Relative Humidity
Enthalpy Deviation kJ/kg Dry Air
Volume m³/kg Dry Air
Moisture Content kg/kg Dry Air
Sensible Heat Factor

Friction Chart for Circular Ducts

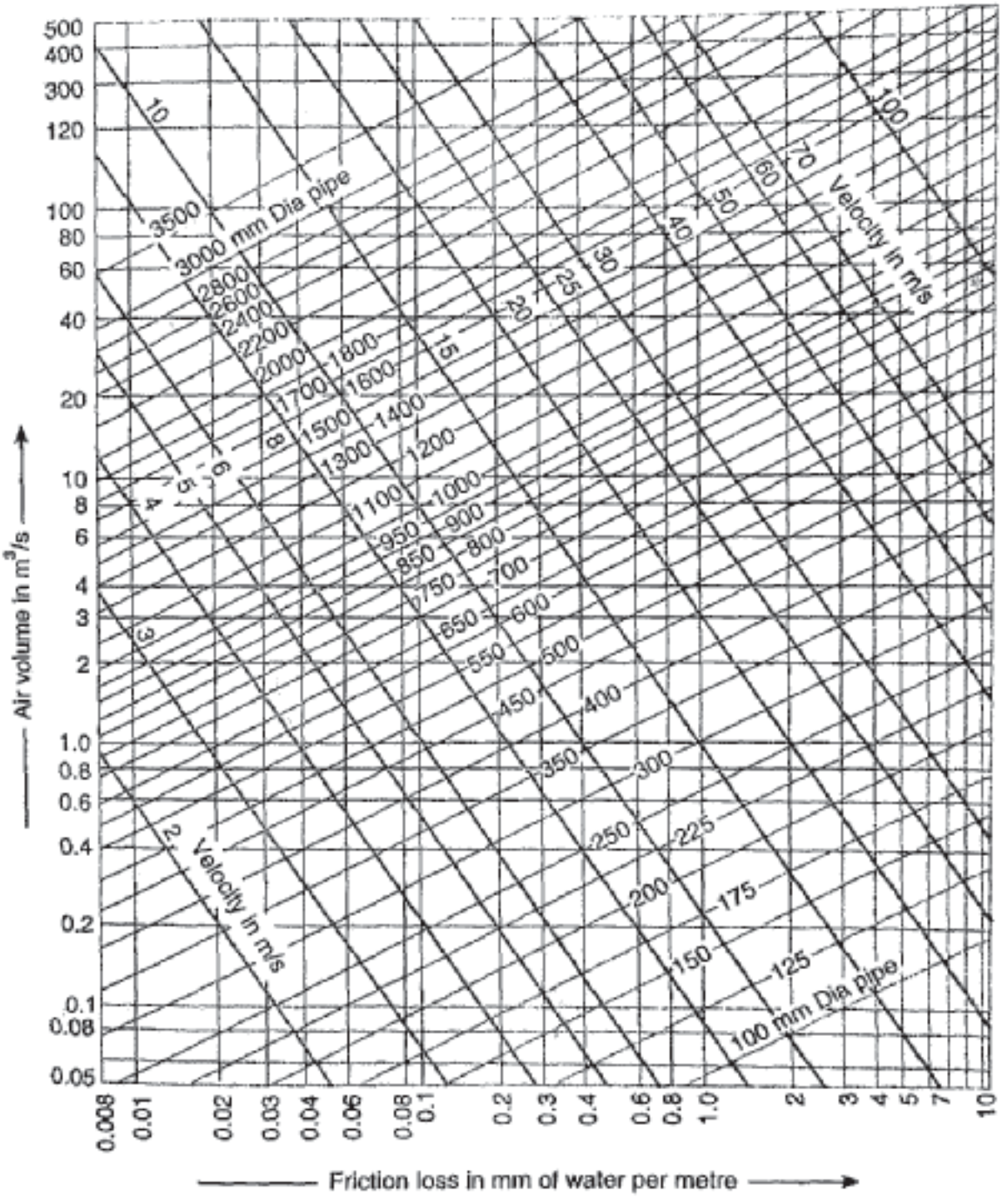

⌘⌘⌘

Total No. of Questions : 8]

SEAT No. : [ ]

P7839

[Total No. of Pages : 3

[6181]-232

B.E. (Mechanical)

DYNAMICS OF MACHINERY

(2019 Pattern) (Semester-VII) (402042)

Time : 2½ Hours] ***[Max. Marks : 70***

Instructions to the candidates:

1) ***Attempt Q.1 or Q.2, Q.3 or Q.4, Q.5 or Q.6, Q.7 or Q.8.***
2) ***Neat diagrams must be drawn wherever necessary.***
3) ***Figures to the right indicate full marks.***
4) ***Assume Suitable data if necessary.***

Q1) a) Determine the natural frequency of the mass 'm' placed at one end of a cantilever beam of negligible mass as shown in fig. 1a. **[5]**

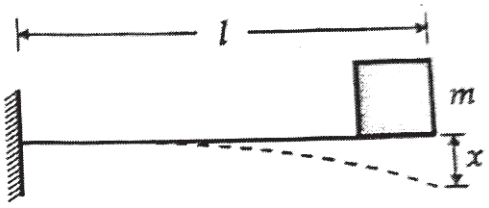

Fig. 1a

b) Explain with neat diagram mathematical model of a motorbike. **[6]**

c) A circular cylinder of mass 4 kg and radius 15 cm is connected by a spring of stiffness 4000N/m as shown in Fig. 1c. If it is free to roll on surface without slipping, determine the natural frequency. **[6]**

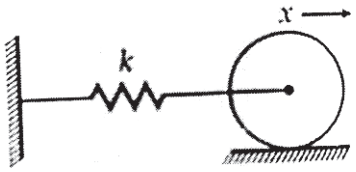

Fig. 1c

OR

P.T.O.

Q2) a) Define the term damping factor and explain with neat sketches, underdamped, overdamped and critically damped systems. **[8]**

b) An under-damped shock absorber is to be designed for a motorcycle of mass 200 kg such that during a road bump, the damped period of vibration is limited to 2 second and amplitude of vibration should reduce to one-sixteenth in one cycle. Find the spring stiffiness and the damping coefficient of shock absorber. **[9]**

Q3) a) Derive an expression for the amplitude of vibration for a system having rotating or reciprocating unbalance. **[8]**

b) A machine part of mass 4 kg vibrates in a viscous fluid. Determine the damping coefficient when a harmonic exciting force of 50 N results in resonant amplitude of 250 mm with a period of 0.4 second. If the excitation frequency is 2 Hz, find the percentage increase in the amplitude of forced vibration when damper is removed. **[10]**

OR

Q4) a) A radio set of 20 kg mass has to be isolated from a machine vibrating with an amplitude of 0.05 mm at a speed of 500 cpm. The set is mounted on four isolators, each having a spring scale of 31400N/m and damping coefficient of 392 N-s/m. Determine **[10]**

i) Amplitude of vibration of radio set

ii) Dynamic load on each isolator due to vibration.

b) Derive an expression for deflection of vertical shaft with a single rotor without damping. **[8]**

Q5) a) Explain the concept of torsionally equivalent shaft and derive equation for its equivalent length. **[7]**

b) Determine the natural frequency and corresponding mode shapes of given system shown in Fig. 5b when K = 40N/m and m = 10kg. **[10]**

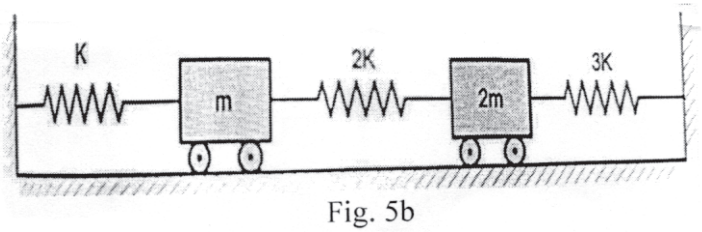

Fig. 5b

OR

Q6) a) Explain the torsional vibrations of geared system neglecting inertia of gears. **[7]**

b) For a spring-mass system shown in Fig. 6b, find Eigen values and Eigen vectors by matrix method. **[10]**

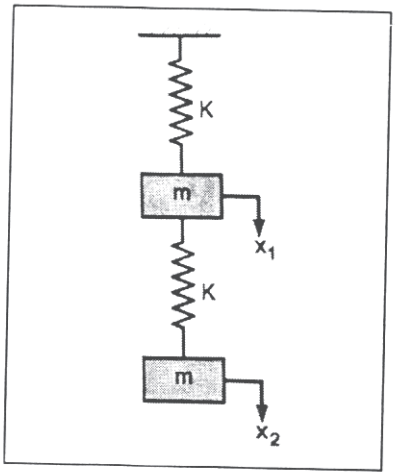

Fig. 6b

Q7) a) What is FFT analyzer? Explain the importance of frequency spectrum for machinery fault detection. **[10]**

b) Explain the process of vibration measurement with neat sketch. **[8]**

OR

Q8) a) What are different methods of vibration control? Explain any one in detail. **[6]**

b) Explain with neat sketch the working of sound level meter. **[6]**

c) Explain anechoic chamber and reverberant chamber. **[6]**

❖ ❖ ❖

Total No. of Questions : 8]

SEAT No. :

P7840

[Total No. of Pages :3

[6181]-233
B.E. (Mechanical Engineering)
TURBOMACHINERY
(2019 Pattern) (Semester-VII) (402043)

Time : 2 Hours] *[Max. Marks : 50*

Instructions to the candidates:

1) ***Solve Q.1 or Q.2, Q.3 or Q.4, Q.5 or Q.6, Q.7 or Q.8.***
2) ***Figures to the right side indicate full marks.***
3) ***Neat diagrams must be drawn wherever necessary.***
4) ***Use of steam tables, Mollier chart and calculator is allowed.***
5) ***Assume suitable data, if necessary.***

Q1) a) Give classification of turbomachines with suitable example. **[6]**

b) Pelton wheel runner is having tangential velocity of 20 m/s. Head race and tail race level difference is 60 m. 10 m head is lost due to friction in penstock. Discharge through the nozzle is 0.03 m^3/s. Vane angle at outlet is 15°. Coefficient of velocity for the nozzle is 0.97. Assuming no friction loss over the buckets, evaluate **[8]**

i) Force exerted by jet on buckets

ii) Workdone per kg of water

iii) Power developed by the runner

iv) Hydraulic efficiency of turbine

OR

Q2) a) Derive expression for force exerted, rate of workdone and efficiency in case of jet striking on moving flat plate **[6]**

b) A Kaplan turbine developing 5.3 MW under head of 10 m with overall efficiency 90% is fitted with a draft tube having inlet diameter 3m and outlet diameter 4.5 m. Turbine is set at 1.6 m above tail race water level. A vacuum gauge inserted at a draft tube inlet indicates the reading of 4.45m of water. Determine the draft tube efficiency. **[8]**

Q3) a) What is compounding? Explain the need of compounding. Explain any one method of compounding in steam turbines. **[5]**

P.T.O.

b) Steam enters in a single stage impulse steam turbine at a velocity of 450 m/s and nozzle exit angle is 20°. Exit angle of the moving blade is 20°. Blade speed is 180 m/s and mass flow rate is 2.5 kg/s. Neglecting the friction losses over the blade, Evaluate **[7]**

i) Blade angle at inlet

ii) Workdone per kg of steam

iii) Diagram efficiency

OR

Q4) a) Derive condition for maximum diagram efficiency and expression for maximum diagram efficiency for impulse steam turbine. **[5]**

b) Parsons reaction steam turbine running at 1400 rpm with 50% degree of reaction. Turbine develops power of 75kW per kg per second of steam. Exit angle of the moving blade is 20° and steam velocity is 1.4 times the blade velocity. Evaluate, **[7]**

i) Blade speed

ii) Mean diameter of the rotor

iii) Inlet angle of the moving blade

Q5) a) Explain various heads in centrifugal pump with a neat sketch. **[5]**

b) The outer diameter of an impeller of a centrifugal pump is 400 mm and outer width is 50 mm. The pump is running at 800 rpm and is working against a total head of 15 m. The vanes are set backward at an angle of 40° at outlet. The manometric efficiency is 75%. Evaluate **[7]**

i) Flow velocity at outlet

ii) Absolute velocity of water leaving the vane

iii) Discharge through the pump

iv) Workdone by impeller on water per second

OR

Q6) a) Explain NPSH. How NPSH can be used to discuss cavitation phenomenon in centrifugal pump? **[5]**

b) A centrifugal pump having outer diameter equal to two times the inner diameter and running at 1200 rpm works against a head of 75 m. The velocity of the flow through the impeller is constant and equal to 3 m/s. The vanes are set back at an angle of 30° at outlet. If the outer diameter

of the of impeller is 600 mm and width at outlet is 50 mm, Evaluate **[7]**

i) Vane angle at inlet

ii) Workdone by impeller on water per second

iii) Manometric efficiency.

Q7) a) Explain Construction and working of axial flow compressor with a neat sketch. **[5]**

b) A centrifugal compressor used for supercharging an aircraft draws air at its inlet conditions of 0.8 bar, 7°C temperature and velocity of 100 m/s. It is compressed adiabatically in impeller up to 1.5 bar, 70°C temperature and velocity leaving impeller is 300 m/s. This air enters in to diffuser where its kinetic energy is completely converted in to pressure energy. Mass flow rate of air is 3 kg/s. Evaluate, **[7]**

i) Impeller power

ii) Isentropic efficiency based on static conditions

iii) Stagnation temperatures and pressures at compressor inlet and outlet

Assume γ =1.4, Cp=1.005KJ/kgK and R=300Nm/KgK.

OR

Q8) a) Explain surging and choking in a centrifugal compressor with a neat sketch. **[5]**

b) A rotary air compressor working between 1 bar and 2.5 bar has internal and external diameter as 300 mm and 600 mm respectively. Vane angle at inlet and outlet are 30° and 45° respectively. If the air enter the impeller at 15 m/s and at 280 K temperature, assuming flow velocity as constant find (i) speed of the impeller (ii) Mach number at inlet of impeller

(iii) work done per kg of air (iv) torque required if mass flow rate of air is 3 kg/s. **[7]**

Assume γ =1.4 and R=300Nm/KgK.



Total No. of Questions : 8]

SEAT No. : [ ]

P6666

[Total No. of Pages : 3

[6181] - 234

B.E. (Mechanical)

AUTOMOBILE DESIGN

(2019 Pattern) (Semester - VII) (402044 A) (Elective - III)

Time : 2 ½ Hours] ***[Max. Marks : 70***

Instructions to the candidates:

1) ***Draw suitable neat diagrams, whenever necessary.***
2) ***Figure to the right indicate full marks.***
3) ***Assume suitable data if required.***

Q1) a) Explain Following with neat labelled diagram? **[12]**

i) Full floating rear shafts.

ii) Semi-floating rear shafts and

iii) Three quarter floating rear shafts

b) A pair of bevel gears transmitting 7.5 kW at 300 rpm is shown in Fig. The pressure angle is 20°. Determine the components of the resultant gear tooth force and draw a free-body diagram of forces acting on the pinion and the gear. **[6]**

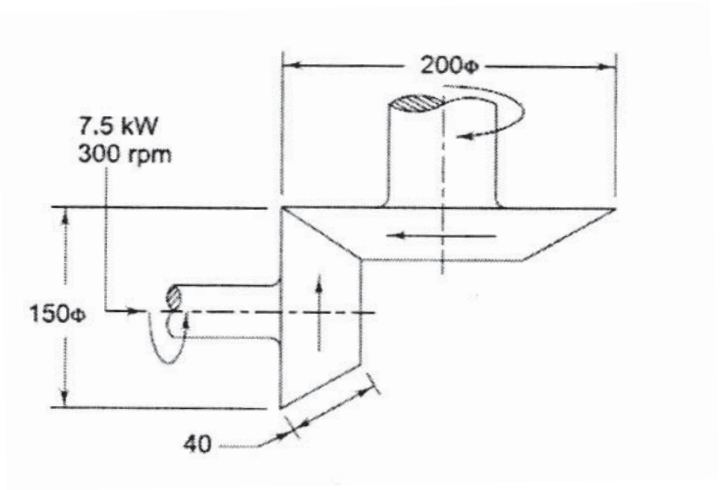

OR

P.T.O.

Q2) a) A pair of straight bevel gears is mounted on shafts, which are intersecting at right angles. The number of teeth on the pinion and gear are 21 and 28 respectively. The pressure angle is 20°. The pinion shaft is connected to an electric motor developing 5 kW rated power at 1440 rpm. The service factor can be taken as 1.5. The pinion and the gear are made of steel (Sut 750 N/mm^2) and heat-treated to a surface hardness of 380 BHN. The gears are machined by a manufacturing process, which limits the error between the meshing teeth to 10 mm. The module and face width are 4 mm and 20 mm respectively. Determine the factor of safety against bending as well as against pitting failure. **[12]**

b) Explain Basic Principles of the Steering Process? **[6]**

Q3) a) Explain following types of brakes with neat diagram. **[10]**

i) Mechanical Brakes
ii) Hydraulic brakes
iii) Servo brakes
iv) Air brakes

b) Discuss wheel construction with neat sketch and explain any one in detail. **[7]**

OR

Q4) a) Explain ABS (Antilock Braking System) in detail. Also state its advantages over hydraulic brake system? **[10]**

b) How tyres are classified? Explain any one with neat sketch? **[7]**

Q5) a) A helical tension spring is used in the spring balance to measure the weights. One end of the spring is attached to the rigid support while the other end, which is free, carries the weights to be measured. The maximum weight attached to the spring balance is 1500 N and the length of the scale should be approximately 100 mm. The spring index can be taken as 6. The spring is made of oil-hardened and tempered steel wire with ultimate tensile strength of 1360 N/mm^2 and modulus of rigidity of 81370 N/mm^2. The permissible shear stress in the spring wire should be taken as 50% of the ultimate tensile strength. Design the spring and calculate **[10]**

i) Wire diameter;
ii) Mean coil diameter;
iii) Number of active coils;
iv) Required spring rate; and
v) Actual spring rate.

b) Explain in detail the function and construction of a leaf spring with neat sketch. **[8]**

OR

Q6) a) A semi-elliptic multi-leaf spring is used for the suspension of the rear axle of a truck. It consists of two extra full-length leaves and ten graduated-length leaves including the master leaf. The centre-to-centre distance between the spring eyes is 1.2 m. The leaves are made of steel 55Si2Mo90 (Syt = 1500 N/mm^2 and E = 207 000 N/mm^2) and the factor of safety is 2.5. The spring is to be designed for a maximum force of 30 kN. The leaves are pre-stressed so as to equalize stresses in all leaves. Determine **[10]**

i) The cross-section of leaves; and

ii) The deflection at the end of the spring.

b) Explain construction and working of Hydro elastic Suspension. **[8]**

Q7) a) Explain with neat sketch the anatomy of passenger car package? **[10]**

b) Explain the steps in vehicle package design. **[7]**

OR

Q8) a) Explain the factors that drives the functional objectives of packaging design? **[10]**

b) Explain in details package design? **[7]**

❄ ❄ ❄

Total No. of Questions : 8]

SEAT No. : ____

P6667

[Total No. of Pages : 2

[6181] - 235

B.E. (Mechanical Engineering)

DESIGN OF HEAT TRANSFER EQUIPMENTS

(2019 Pattern) (Semester - VII) (402044 B) (Elective - III)

Time : 2 ½ Hours] ***[Max. Marks : 70***

Instructions to the candidates:

1) ***Answer Q.l or Q.2, Q.3 or Q.4, Q.5 or Q.6, Q.7 or Q8.***
2) ***Neat diagrams must be drawn whenever necessary.***
3) ***Figures to the right indicate full marks.***
4) ***Assume suitable data if necessary.***

Q1) a) Explain the Overall Design Process of shell and tube type heat exchangers. **[9]**

b) Define Shell side pressure drop and Tube side pressure drop. Also explain factors affecting on Shell side pressure drop and Tube side pressure drop. **[9]**

OR

Q2) a) What are the sources of Noise in a heat exchanger? How it can be minimized? **[9]**

b) What are the various correction (j) factors considered for shell side heat transfer coefficient in Bell Delaware method? **[9]**

Q3) a) Give the detailed design considerations of heat exchangers for refrigeration and air conditioning applications. **[9]**

b) Explain the design considerations involved in a evaporator and condenser. **[8]**

OR

Q4) a) Write a classification of condenser used in refrigeration systems. **[9]**

b) Write down the steps in thermal analysis of evaporator. **[8]**

P.T.O.

Q5) a) Differentiate between plate fin heat exchanger and tube fin heat exchanger. **[9]**

b) Write down steps in thermal analysis in compact heat exchanger. **[8]**

OR

Q6) a) Explain with neat sketch types of fins used in plate fin heat exchanger. **[9]**

b) Differentiate mini and micro channel Heat exchanges. **[8]**

Q7) a) Define Cooling tower and give the classification of cooling towers. **[9]**

b) Explain the difference between wet bulb & dew point temperatures. **[9]**

OR

Q8) a) Explain the design considerations for a counter flow direct contact heat exchanger. **[9]**

b) Explain the cooling tower internals and roll of fills in cooling towers. **[9]**

❄ ❄ ❄

Total No. of Questions : 8]

SEAT No. :

P6668

[Total No. of Pages : 2

[6181] - 236

B.E. (Mechanical Engineering)

MODERN MACHINING PROCESSES

(2019 Pattern) (Semester - VII) (402044 C) (Elective - III)

Time : 2 ½ Hours] *[Max. Marks : 70*

Instructions to the candidates:

1) ***Answer Q.l or Q.2, Q.3 or Q.4, Q.5 or Q.6, Q.7 or Q8.***
2) ***Neat diagrams must be drawn whenever necessary.***
3) ***Figures to the right indicate full marks.***
4) ***Assume suitable data if necessary.***

Q1) a) Explain in detail with suitable sketch of electro chemical machining. Also discuss the effect of process parameters, merits, demerits and applications. **[9]**

b) Explain the chemical machining process with principle, construction, working process parameters and applications. **[8]**

OR

Q2) a) Explain electrochemical grinding process with principle, construction, working process parameters. **[8]**

b) Explain the effect of process parameters on material removal rate in electro chemical machining. **[5]**

c) Differentiate chemical machining and photochemical machining process. **[4]**

Q3) a) Explain in detail with suitable sketch of electro discharge machining. Also discuss the effect of process parameters, merits, demerits and applications. **[9]**

b) Explain electric Discharge Diamond Grinding with principle, construction, working process parameters and applications. **[9]**

OR

P.T.O.

Q4) a) Explain the effect of following factors on Metal removal rate and accuracy in EDM. **[8]**

i) Tool material

ii) Dielectric fluid

b) Differentiate electrical discharge grinding and electro discharge diamond grinding. **[6]**

c) Explain the principle of W-EDM with suitable sketch. **[4]**

Q5) a) Explain the material removal mechanism in diamond turn machining. **[9]**

b) Explain micro turning with suitable sketch. Also discuss the advantages, disadvantages and applications. **[8]**

OR

Q6) a) Explain micro drilling with suitable sketch. Also discuss the advantages, disadvantages and applications. **[8]**

b) Write note on micro engraving. **[5]**

c) Draw neat labeled diagram of diamond turn machine and also list applications. **[4]**

Q7) a) Explain Magnetorheological Finishing with principle, construction, working process parameters and applications. **[9]**

b) What is micro and nano system? Explain wet and dry etching process with suitable sketch. **[9]**

OR

Q8) a) Explain the photolithography process with principle, construction, working process parameters and applications. **[8]**

b) Compare MAF and AFF. **[6]**

c) What is Microsystems? also write Application of Microsystems. **[4]**

❄ ❄ ❄

Total No. of Questions : 8]

SEAT No. :

P6669

[Total No. of Pages : 3

[6181] - 237

B.E. (Mechanical)

INDUSTRIAL ENGINEERING

(2019 Pattern) (Semester - VII) (402044 D) (Elective - III)

Time : 2 ½ Hours] *[Max. Marks : 70*

Instructions to the candidates:

1) ***Solve Q.1 or Q.2, Q.3 or Q.4, Q.5 or Q.6, Q.7 or Q8.***
2) ***Figures to the right indicate full marks.***
3) ***Use of electronic calculator is allowed***
4) ***Assume suitable data if necessary.***

Q1) a) Define Plant Location & explain four factors which affectsplant location selection. **[6]**

b) Differentiate between Product Layout & Process Layout. **[6]**

c) What are the objectives of material handling? **[6]**

OR

Q2) a) Define material handling. List Material Handling equipment and describe any three of them. **[9]**

b) Describe material flow pattern in material handling with suitable sketches? **[9]**

Q3) a) What are the different techniques of production control? **[9]**

P.T.O.

b) Explain the need for forecasting. **[8]**

The past data of monthly sell is as given below:

Month	Actual Sells
1	56
2	76
3	58
4	67
5	75
6	76
7	

i) If a three month moving average is used to forecast the next month's demand, compute the forecast of the load on the center in the 7th month.

ii) Compute by exponential smoothing for the 7th month. Take smoothing coefficient ($\alpha = 0.3$)

OR

Q4) a) Write short notes on : **[8]**

i) Assembly line balancing technique

ii) Capacity Planning

b) A dealership for Skoda cars sells a particular model of the car in various months of the year shown in the table below. Estimate the forecast for the month of October 2022 Using (Take period n =3) **[9]**

i) Moving average method

ii) Exponential smoothing method (Take exponential smoothing constant as 0.2)

iii) Comment on the results of above methods.

Month	Sells of cars
Jan 2022	80
Feb 2022	65
March 2022	90
April 2022	70
May 2022	80
June 2022	100
July 2022	85
August 2022	60
September 2022	75

Q5) a) Enumerate needs of inventories? **[9]**

b) M/s Patil Brother Ltd. are the manufacturers of Lamps. The following are the details of their operation during 2022 : **[9]**

Average monthly market demand 2,000 lamps
Ordering cost` 200 per order
Inventory carrying cost 20% per annum
Cost of lamps` 1000 per lamp
Normal usage 100 lamps per week
Minimum usage 50 lamps per week
Maximum usage 200 lamps per week
Lead time to supply 4 - 6 weeks
Compute from the above :

i) Economic order quantity.
ii) Maximum level of stock.
iii) Minimum level of stock.
iv) Re-order level of stock.

OR

Q6) a) The annual demand for an item is 3200 parts. The unit cost is Rs. 6 and the inventory carrying charges are estimated as 25% per annum. If the cost of one procurement is Rs. 150. Calculate. **[9]**

i) EOQ
ii) Number of orders per year
iii) Time between two consecutive order
iv) The optimal cost

b) Write a short note on EPR? Also explain different modules present in ERP. **[9]**

Q7) a) Write a short note on Value Engineering. **[5]**

b) Enlist the objectives of job evaluation. **[6]**

c) Explain the principle of ergonomics. **[6]**

OR

Q8) a) What is Performance Appraisal? Explain Performance Appraisal methods. **[9]**

b) Explain the quantitative & qualitative methods of Job evaluation. **[8]**

❄ ❄ ❄

Total No. of Questions : 8]

SEAT No. : ____

P6670

[Total No. of Pages : 2

[6181] - 238

B.E. (Mechanical Engineering)

COMPUTATIONAL FLUID DYNAMICS

(2019 Pattern) (Semester - VII) (402044 F) (Elective - III)

Time : 2 ½ Hours] ***[Max. Marks : 70***

Instructions to the candidates:

1) ***Answer Q.l or Q.2, Q.3 or Q.4, Q.5 or Q.6, Q.7 or Q8.***
2) ***Neat diagrams must be drawn whenever necessary.***
3) ***Figures to the right indicate full marks.***
4) ***Use of electronic pocket calculator is allowed.***
5) ***Assume suitable data, if necessary.***

Q1) a) Describe and illustrate the solution of 1-D transient convection - diffusion system. Explain its significance. **[9]**

b) What is Peclet number? State its Significance. **[9]**

OR

Q2) a) Explain 2D unsteady heat convection-diffusion equation for slug flow using finite volume method. **[10]**

b) Compare Implicit versus Explicit finite volume method for CFD Modelling. **[8]**

Q3) a) Derive solution of Navier-Stoke' equation for incompressible flow. **[8]**

b) Explain the applications of CFD for external flow over circular cylinder simulation. **[9]**

OR

Q4) a) Discuss the challenges in solving Navier-Stokes Equations numerically? Suggest two remedies to overcome these challenges. **[9]**

b) What is SIMPLE algorithm? Explain in details. **[8]**

P.T.O.

Q5) a) Derive One equation model for Turbulent Flow Modeling. **[10]**

b) What is Scales of turbulence? Explain in details. **[8]**

OR

Q6) a) Why turbulence modeling is required? Explain any one "two-equation" turbulence model. **[10]**

b) Explain the Reynolds Averaged Navier-Stokes (RANS) and its applications. **[8]**

Q7) a) Explain types of Fluid-Solid Couplings in details. **[8]**

b) Explain and illustrate Lagrangian Solid System. **[9]**

OR

Q8) a) What is continuum mechanics of fluid and solid with respect to Fluid-Structure interaction formulation? **[9]**

b) Explain and illustrate mechanical forces and equilibrium for FSI formulation. **[8]**

❄ ❄ ❄

Total No. of Questions : 8]

SEAT No. :

P-6671

[Total No. of Pages : 2

[6181]-239

B.E. (Mechanical Engineering)

PRODUCT DESIGN AND DEVELOPMENT

(2019 Pattern) (Semester - VII) (402045A) (Elective - IV)

Time : 2½ Hours] *[Max. Marks : 70*

Instructions to the candidates:

1) ***Solve Q.1 or Q.2, Q.3 or Q.4 Q.5 or Q.6, Q.7 or Q.8.***
2) ***Neat diagrams must be drawn wherever necessary.***
3) ***Figures to the right indicate full marks.***
4) ***Use of electronic pocket calculator is allowed.***
5) ***Assume suitable data if necessary.***

Q1) a) Explain SWOT analysis in selecting profitable product concept. **[7]**

b) Describe in detail reverse engineering. **[6]**

c) Explain Economic analysis in product analysis. **[4]**

OR

Q2) a) Explain concept analysis considering functional, marketing, operational etc. aspect. **[7]**

b) Which are the different idea generation approaches use in product design and development. **[6]**

c) What is product policy of an organization? List down various product policies. **[4]**

Q3) a) What is Ergonomics in design? Explain types of Ergonomics with example. **[7]**

b) Explain BOM with example. **[6]**

c) Define Limit, Tolerance and Fit. **[4]**

OR

Q4) a) What is product architecture? Explain types of product architecture. **[7]**

b) What is the need for engineering drawing? Classify engineering drawing. **[6]**

c) What is part print analysis? How it is important in product development. **[4]**

P.T.O.

Q5) a) What is production capacity planning? Explain the steps followed in planning. **[8]**

b) What is Rapid prototyping? Define and enlist various methods of prototyping. **[6]**

c) Define letter of intent, purchase order and product costing in vendor development. **[4]**

OR

Q6) a) Explain stereolithography in detail with suitable sketch. **[8]**

b) Explain FEA with example. **[6]**

c) Why homologation certificate is important in design and development? Explain with example. **[4]**

Q7) a) What is APQP, what role it plays in robust design and development? **[8]**

b) Compare Value analysis and Value engineering. **[6]**

c) Discuss the elements of PLM in detail. **[4]**

OR

Q8) a) Explain application of Teamcenter/Nx Manager in Product design and development. **[8]**

b) Compare PFMEA AND DFMEA. **[6]**

c) What are guidelines for design for robustness? Discuss. **[4]**

⌘⌘⌘

Total No. of Questions : 8]

SEAT No. : ____

P-6672

[Total No. of Pages : 2

[6181]-240

B.E. (Mechanical)

EXPERIMENTAL METHODS IN THERMAL ENGINEERING

(2019 Pattern) (Semester - VII) (402045B) (Elective - IV)

Time : 2½ Hours] ***[Max. Marks : 70***

Instructions to the candidates:

1) ***Solve 4 questions Q1 or Q2, Q3 or Q4, Q5 or Q6, Q7 or Q8 is compulsory.***
2) ***Neat diagrams must be drawn wherever necessary***
3) ***Figures to the right indicate full marks.***
4) ***Assume suitable data, wherever necessary.***

Q1) a) What is Thermocouple? Explain the type of thermocouple with significance applications? **[9]**

b) Define the properties emissivity, absorptivity, reflectivity and transmissivity? What is the solar constant? How is it used to determine the effective surface temperature of the sun? **[8]**

OR

Q2) a) Write short notes on : **[9]**

i) Thermistor

ii) Thermopile

iii) Liquid crystal thermography

b) What is an Optical Pyrometer? Explain its Construction, Working & its Applications. **[8]**

Q3) a) Write a short note on : **[10]**

i) McLeod gauge

ii) Pirani gauge and

iii) Ionization gauge

b) Write the types of sensors used in pressure measurement with its applications. **[8]**

P.T.O.

OR

Q4) a) Difference between high pressure measurement and low-pressure measurement? How to measure the pressure in combustion? **[10]**

b) Describe transient response of pressure transducers in detail. **[8]**

Q5) a) Describe briefly Laser Doppler Anemometer (LDA) and Magnetic flow meter. **[8]**

b) How the flow measurement techniques used to validate CFD results? **[10]**

OR

Q6) a) Explain the flow obstruction methods? How to measure the flow in micro channel? **[8]**

b) How does temperature relate to velocity? Explain the thermal effect on Velocity measurement? **[10]**

Q7) a) What is the main purpose of Data Acquisition system (DSA)? Describe the Data Acquisition methods briefly? **[8]**

b) How to apply the AI & ML in mechanical measurement process? What is regression used for? **[9]**

OR

Q8) a) What are the principles Data Acquisition and conversion? What is the importance of signal conditioning? **[8]**

b) What is ANOVA in statistical analysis? What type of ML used for prediction of measurement parameter? **[9]**

Total No. of Questions : 8]

SEAT No. :

P6673

[Total No. of Pages : 2

[6181] - 241

B.E. (Mechanical Engineering)

ADDITIVE MANUFACTURING

(2019 Pattern) (Semester - VII) (Elective - IV) (402045 C) (Theory)

Time : 2 ½ Hours] *[Max. Marks : 70*

Instructions to the candidates:

1) ***Answer Q.l or Q.2, Q.3 or Q.4, Q.5 or Q.6, Q.7 or Q8.***
2) ***Neat diagrams must be drawn wherever necessary.***
3) ***Figures to the right indicate full marks.***
4) ***Assume suitable data wherever necessary.***

Q1) a) Explain process Fused Filament Fabrication (FFF) with suitable sketch. **[9]**

b) Explain process Bio-printing with suitable sketch. **[9]**

OR

Q2) a) Explain process Direct Ink Writing (DIW) with suitable sketch. **[9]**

b) Explain process Direct Metal Deposition (DMD) with suitable sketch. **[9]**

Q3) a) Explain the materials used in 4D Printing with important process Parameters, benefits, Limitations and appropriate applications. **[9]**

b) Explain varieties of chemical treatment applied in pre- and post-processing of additive manufacturing based products. **[8]**

OR

Q4) a) Explain Robocasting and Bio printing with suitable example. **[9]**

b) Explain use of Ceramics in Additive Manufacturing with important process parameters, benefits, Limitations and appropriate applications. **[8]**

P.T.O.

Q5) a) Explain the design considerations of different types of nozzles used in Polymer based 3D Printers. **[9]**

b) Explain the design considerations of Positioning Devices and Scanners System used in Laser-Based Metal 3D Printers. **[8]**

OR

Q6) a) Explain the process and mechanism used in Multi-Jet modeling (MJM). **[9]**

b) What is calibration of 3D Printer? Explain the steps in details. **[8]**

Q7) a) Explain how additive manufacturing is used in Electronics Industries. Also write merits, demerits and practical feasible applications with illustrations. **[9]**

b) Write a short note on 4D Printing and 5D Printing and its applications. **[9]**

OR

Q8) a) Explain how additive manufacturing is used in Assistive Devices Sector. Also write merits, demerits and practical feasible applications with illustrations. **[9]**

b) Write use, method and application of bio printing. Explain with example of case studies additive manufacturing in aerospace and machine tools. **[9]**

❄ ❄ ❄

Total No. of Questions : 8]

SEAT No. : ____

P6674

[Total No. of Pages : 5

[6181] - 242

B.E. (Mechanical)

OPERATIONS RESEARCH

(2019 Pattern) (Semester - VII) (402045 D) (Elective - IV)

Time : 2 ½ Hours] ***[Max. Marks : 70***

Instructions to the candidates:

1) ***Answer Q.l or Q.2, Q.3 or Q.4, Q.5 or Q.6, Q.7 or Q.8.***
2) ***Figures to the right indicate full marks.***
3) ***Assume suitable data, if necessary.***

Q1) a) Give the correspondence between entities in primal and dual in LPP. **[5]**

b) Use the simplex method to solve the following LP problem. **[12]**

Maximize $Z = 3x_1 + 5x_2 + 4x_3$

subject to the constraints

i) $2x_1 + 3x_2 \le 8$,

ii) $2x_2 + 5x_3 \le 10$

iii) $3x_1 + 2x_2 + 4x_3 \le 15$

and $x_1, x_2, x_3 \ge 0$

OR

Q2) a) Discuss the general mathematical model of linear programming problem. **[7]**

b) Use the graphical method to solve the following LP problem. **[10]**

Maximize $Z = 15x_1 + 10x_2$

subject to the constraints

i) $4x_1 + 6x_2 \le 360$.

ii) $3x_1 + 0x_2 \le 180$,

iii) $0x_1 + 5x_2 \le 200$

and $x_1, x_2 \ge 0$

P.T.O.

Q3) a) Discuss the Hungarian method with the help of flow chart for assignment problem. **[8]**

b) A department of a company has five employees with five jobs to be performed. The time (in hours) that each man takes to perform each job is given in the effectiveness matrix. **[10]**

Employees

		I	II	III	IV	V
	A	10	5	13	15	16
	B	3	9	18	13	6
Jobs	C	10	7	2	2	2
	D	7	11	9	7	12
	E	7	9	10	4	12

OR

Q4) a) Explain the generalized syntax of assignment and transportation problems. **[8]**

b) Find the initial basic feasible solution by using Vogel's Approximation Method. **[10]**

W → F ↓	W_1	W_2	W_3	W_4	Factory Capacity
F_1	19	30	50	10	7
F_2	70	30	40	60	9
F_3	40	8	70	20	18
Warehouse Requirement	5	8	7	14	34

Q5) a) Explain the different types of flots involved in CPM analysis of network and how it is calculated? **[6]**

b) An insurance company has decided to modernize and refit one of its branch offices. Some of the existing office equipment will be disposed of but the remaining will be returned to the branch after the completion of the renovation work. Tenders are invited from a number of selected contractors. The contractors would be responsible for all the activities in connection with the renovation work excepting the prior removal of the old equipment and its subsequent replacement.The major elements of the project have been identified, as follows. along with their durations and immediately preceding elements. **[12]**

Activity	*Description*	*Duration (weeks)*	*Immediate Predecessors*
A	Design new premises	14	-
B	Obtain tenders from the contractors	4	A
C	Select the contractor	2	B
D	Arrange details with selected contractor	1	C
E	Decide which equipment is to be used	2	A
F	Arrange storage of equipment	3	E
G	Arrange disposal of other equipment	2	E
H	Order new equipment	4	E
I	Take delivery of new equipment	3	H, L
J	Renovations take place	12	K
K	Remove old equipment for storage or disposal	4	D, F, G
L	Cleaning after the contractor has finished	2	J
M	Retuni old equipment for storage	2	H, L

i) Draw the network diagram showing the interrelations between the various activities of the project.

ii) Calculate the minimum time that the renovation can take from the design stage.

iii) Find the effect on the overall duration of the project if the estimates or tenders can be obtained in two weeks from the contractors by reducing their numbers.

iv) Calculate the 'independent float' that is associated with the non-critical activities in the network diagrarn.

OR

Q6) a) Describe the problem of replacement of items whose maintenance cost increase with time. Assume that the value of money remains constant. **[6]**

b) A firm is considering the replacement of a machine, whose cost price is Rs. 12,200, and its scrapvalue is Rs 200. From experience the running (maintenance and operating) costs are found to be as follows : **[12]**

Year :	1	2	3	4	5	6	7	8
Running cost (Rs) :	200	500	800	1,200	1,800	2,500	3,200	4,000

When should the machine be replaced?

Q7) a) Explain Monte Carlo Simulation. **[5]**

b) A dentist schedules all his patients for 30-minute appointments. Some of the patients takemore 30 minutes some less, depending on the type of dental work to be done. The following summary shows the various categories of work, their probabilities and time actually needed to complete the work: **[12]**

Caregon of Service	*Time Required (minutes)*	*Probability of Category*
Filling	45	0.40
Crown	60	0.15
Cleaning	15	0.15
Extraction	45	0.10
Checknp	15	0.20

Simulate the dentist's clinic for four hours and determine the average waiting time for the patients as well as the idleness of the doctor. Assume that all the patients show up at the clinic at exactly their scheduled arrival time starting at 8.00 a.m. Use the following random numbers for handling the above problem: 40 82 11 34 25 66 17 79.

OR

Q8) a) Explain the various steps involved in simulation process. **[5]**

b) A salesman located in a city A decided to travel to city B. He knew the distances of alternative routes from city A to city B. He then drew a highway network map as shown in the Fig.The city of origin A, is city 1. The destination city B, is city 10. Other cities through which the salesman will have to pass through are numbered 2 to 9. The arrow representing routes between cities and distances in kilometers are indicated on each route. The salesman's problem is to find the shortest route that covers all the selected cities from A to B. **[12]**

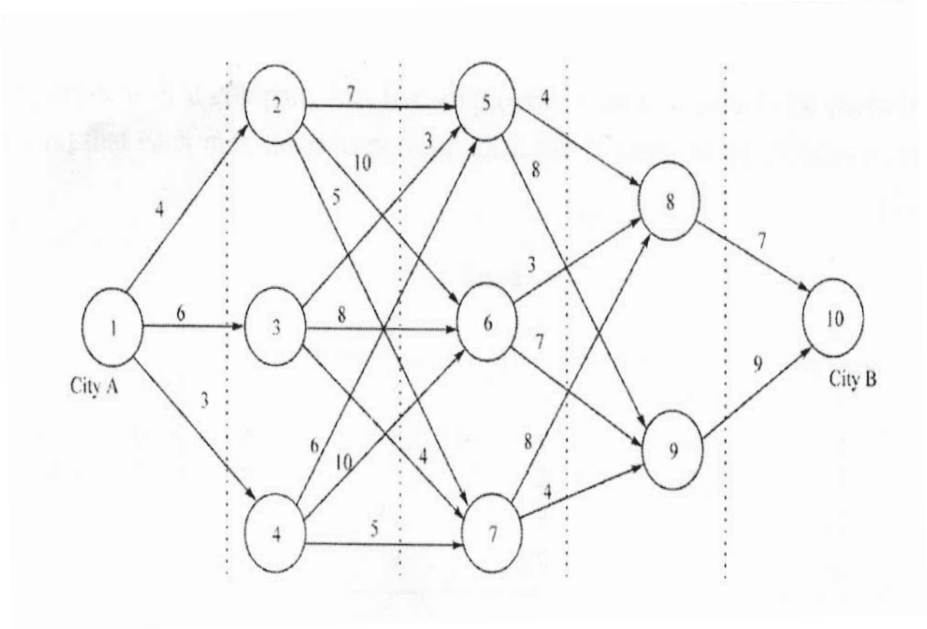

Total No. of Questions : 8]

SEAT No. : [ ]

P6675

[Total No. of Pages : 2

[6181] - 243

B.E. (Mechanical Engineering)

AUGMENTED REALITY AND VIRTUAL REALITY

(2019 Pattern) (Semester - VII) (402045 E) (Elective - IV)

Time : 2 ½ Hours] ***[Max. Marks : 70***

Instructions to the candidates:

1) ***Solve Q.l or Q.2, Q.3 or Q.4, Q.5 or Q.6, Q.7 or Q8.***
2) ***Neat diagrams must be drawn wherever necessary.***
3) ***Figures to the right indicate full marks.***
4) ***Use of electronic pocket calculator is allowed***
5) ***Assume suitable data, if necessary.***

Q1) a) What are the four system elements of typical immersive VR system? Explain and illustrate them. **[8]**

b) Explain with neat sketch the integration of various elements of a generic VR system. **[10]**

OR

Q2) a) Explain and illustrate linear and non-linear translation used in animation of objects. **[10]**

b) Explain non-immersive VR system of modes of interaction. **[8]**

Q3) a) Define Augmented Reality (AR) and its capability. Also define "what is not Augmented Reality (AR)"? **[8]**

b) Explain following Augmented Reality (AR) displays: **[9]**

i) Head attached displays,

ii) Handheld displays, and

iii) Spatial displays.

OR

P.T.O.

Q4) a) Explain the five domains where and how Augmented Reality is used today. **[10]**

b) Describe the core components of Augmented Reality (AR). **[7]**

Q5) a) Explain human eye's following features and characteristics: **[9]**

Accommodation, The pupil, The retina, Visual acuity, Light and dark adaption, Peripheral vision, Persistence of vision, Stereopsis, Visual field, Synthetic images versus reality.

b) Explain the following key features of Jack figure: Articulated hands, Reaching, Grasping, Collision detection, Collision avoidance, Anthropometric scaling, Walking behaviours, Balance control, Field of view, Joint torque, and Sensor channels. **[9]**

OR

Q6) a) Explain the following range of dynamic features that mimic the dynamics of objects in the real world as a part of VR system and software: Gravity, Fuel, Climbing, Falling, Friction, Restitution, Driving velocity, External velocity, Maximum velocity, Angular velocity, and Pushable. **[9]**

b) Describe and illustrate head-coupled displays, its characteristics and market available technology used in VR systems. **[9]**

Q7) a) Explain any one augmented reality application in engineering domain. **[8]**

b) Explain how VR can be used in human factors modelling. **[9]**

OR

Q8) a) Explain how VR can be subjected to Computational Fluid Dynamics (CFD) techniques to discover air or fluid flow around the object, and surface temperature profiles. **[9]**

b) Explain how AR can be used in maintenance and repair. **[8]**

❄ ❄ ❄

Total No. of Questions : 8]

SEAT No. : ____

P-6676

[Total No. of Pages : 3

[6181]-244

B.E. (Mechanical Engineering)

COMPUTER INTEGRATED MANUFACTURING

(2019 Pattern) (Semester - VIII) (402048)

Time : 2½ Hours] ***[Max. Marks : 70***

Instructions to the candidates:

1) ***Answer Q1 or Q2, Q3 or Q4, Q5 or Q6, Q7 or Q8.***
2) ***Neat diagrams must be drawn wherever necessary.***
3) ***Figures to the right indicate full marks.***
4) ***Use of electronic pocket calculator is allowed.***
5) ***Assume Suitable data, if necessary.***

Q1) a) Draw & Explain the components of CNC Machine Tool. **[9]**

b) Write a CNC turning Program for following. **[9]**

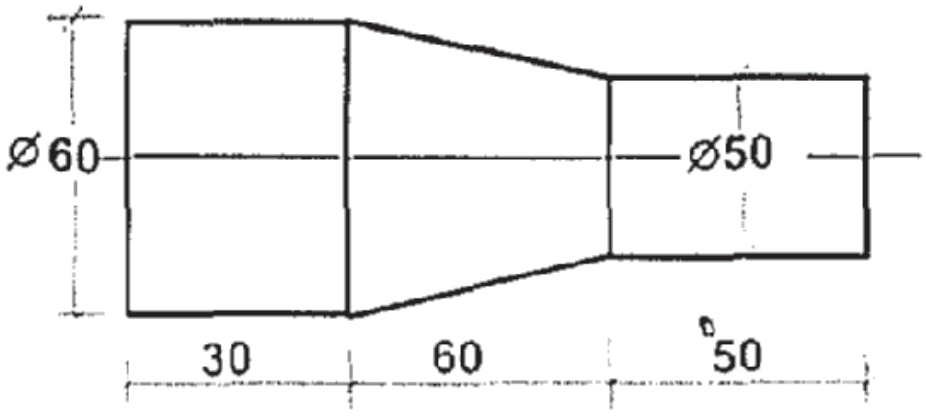

(All dimensions are in mm)

Fig. 1b

OR

Q2) a) Explain Tool length and cutter radius compensation with suitable G-codes. **[9]**

P.T.O.

b) Write a part Program for 10 mm drilling operation at four location on milling machine on a work piece shown in Figure 2b. **[9]**

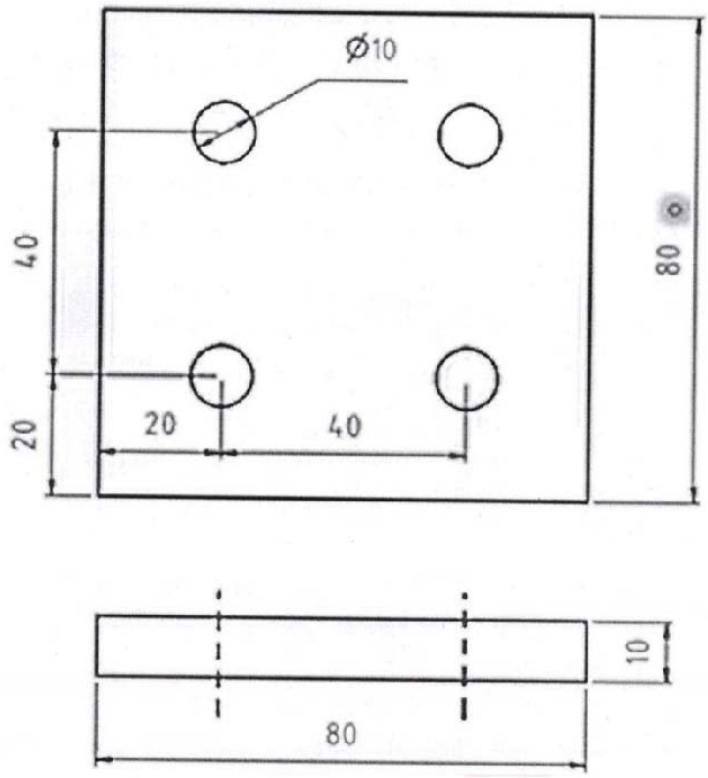

(All dimensions are in mm)
Fig. 2b

Q3) a) Describes the different approaches to Computer Aided Process Planning (CAPP). **[9]**

b) Explain in brief Capacity planning and Enterprise Resource Planning (ERP). **[8]**

OR

Q4) a) Explain Logical steps in Computer Aided Process Planning (CAPP). **[8]**

b) Describe the Manufacturing Resource Planning (MRP-II) with input, working, outputs and benefits. **[9]**

Q5) a) Explain any three Flexible Manufacturing Systems (FMS) based on layout with suitable sketches. **[9]**

b) Explain Optiz parts coding system with suitable example. **[9]**

OR

Q6) a) Describe Rank order Clustering (ROC) algorithm with suitable example. **[9]**

b) Explain cellular manufacturing and types of machine cell design with layouts. **[9]**

Q7) a) Explain the classification of components of Industry 4.0. **[9]**

b) Explain Big-Data and Cloud Computing used for IoT along with its benefits and limitations. **[8]**

OR

Q8) a) Explain the use of IoT for Smart Manufacturing, Predictive Maintenance and Supply-Chain & Logistics applications. **[9]**

b) Explain with an example, "How Digital Twin is implemented for Smart Manufacturing?" **[8]**

⌘⌘⌘

Total No. of Questions : 8]

SEAT No. : ____

P-6677

[Total No. of Pages : 3

[6181]-245
B.E. (Mechanical)
ENERGY ENGINEERING
(2019 Pattern) (Semester - VIII) (402049)

Time : 2½ Hours] ***[Max. Marks : 70***

Instructions to the candidates :

1) ***Attempt Q.1 or Q.2, Q.3 or Q.4, Q.5 or Q.6, Q.7 or Q.8.***
2) ***Neat diagrams must be drawn wherever necessary.***
3) ***Figures to the right indicate full marks.***
4) ***Assume suitable data, if necessary.***
5) ***Use of steam tables, Mollier chart and calculator is allowed.***

Q1) a) What do you mean by Flow Duration Curve? Discuss main functions of the same. **[6]**

b) Describe with simple diagram general layout of diesel power plant indicating all systems used. **[6]**

c) Discuss working of Boiling Water Reactor with its diagram and limitations. **[6]**

OR

Q2) a) What do you mean by Hydrograph? Discuss main functions of the same. **[6]**

b) Describe with simple diagram Plant Layout of Low Capacity Diesel Engine Power Plant. **[6]**

c) Discuss working of Pressurized Water Reactor with its diagram and advantages. **[6]**

Q3) a) The air enters the compressor of gas-turbine power plant at 1 bar, 27 degrees Celsius. The pressure ratio is 6:1. The air after compression is passed through heat exchanger with effectiveness 0.65. Then air is passed to combustion chamber and heated to 870 degrees Celsius Then gases are expanded up to 1 bar in turbine then to heat exchanger and finally to the exhaust. The isentropic efficiency of compressor, gas turbine is 80%, 85% respectively. Take adiabatic index for air gas as 1.4. Take specific heat for air, gas as 1 KJ/Kg-K. Neglect mass flow rate of fuel and air mass as 5 kg/sec. Draw cycle arrangement and T-s diagram and determine. **[9]**

P.T.O.

i) The thermal efficiency of cycle

ii) Heat carried away by exhaust gases on per minute basis.

b) Define Tri-generation. Describe Tri-generation cycle with block diagram, advantages and applications. **[8]**

OR

Q4) a) The air enters the compressor of 5 MW capacity gas-turbine power plant at 1 bar, 30 degrees Celsius. The maximum cycle temperature, pressure is 550 degrees Celsius, 5 bar respectively. The two stage expansion with reheating pressure of 2.24 bar is used in the plant. In the reheater gas is heated up to maximum cycle temperature. The gases are expanded up to 1 bar in second turbine. The isentropic efficiency of compressor, both turbines is 80%, 85% respectively. Take adiabatic index for air gas as 1.4,1.33 respectively. Take specific heat for air, gas as 1 KJ/Kg-K, 1.15 KJ/Kg-K respectively. Neglect mass flow rate of fuel. Draw cycle arrangement and T-s diagram and determine. **[9]**

i) The thermal efficiency of cycle

ii) Mass flow rate of air

b) How Kalina (Cheng) Cycle works? Describe with cycle arrangement, advantages and disadvantages. **[8]**

Q5) a) A power generation station with maximum demand as 30 MW having following annual data. **[6]**

Capacity factor = 0.4, Load factor = 0.5 and use factor = 0.5.

Determine

i) Annual energy produced

ii) Reserve capacity over and above peak load

iii) Number of hours during which plant is not working

b) State main functions of circuit breaker. Describe working of anyone circuit breaker with diagram. **[6]**

c) Describe methods of estimation of Energy demand. **[5]**

OR

Q6) a) Refer data for power supplied to consumer **[6]**

Time (hr)	0-6	6-10	10-12	12-16	16-20	20-22	22-24
Load (MW)	20	50	60	40	80	70	40

Determine

i) Plant load factor

ii) Load factor for stand by equipment of 20 MW capacity if it takes up all load above 60MW

b) List out various methods of thermal energy storage. Describe anyone method with simple diagram. **[6]**

c) Why relays are used in power stations? Discuss working of any one relay with diagram. **[5]**

Q7) a) Elaborate dolphin type wave machines with diagram and advantages. **[6]**

b) Discuss the working of Claude's Ocean Thermal Energy system with simple diagram and advantages. **[6]**

c) Discuss the working of superheated steam geothermal energy system with diagram and advantages. **[6]**

OR

Q8) a) Explain the working principle of Solar Photovoltaic System. What are advantages and applications of the same? **[6]**

b) Write note on:- Fuel Cells **[6]**

c) Write note on:- Open type (Inert gas) MHD system. **[6]**



Total No. of Questions : 8]

SEAT No. :

P-6678

[Total No. of Pages : 4

[6181]-246

B.E. (Mechanical)

QUALITY AND RELIABILITY ENGINEERING

(2019 Pattern) (Semester - VIII) (402050A) (Elective - V)

Time : 2½ Hours] ***[Max. Marks : 70***

Instructions to the candidates:

1) ***Draw suitable neat diagrams, wherever necessary.***
2) ***Figure to the right indicate full marks.***
3) ***Assume suitable data if required.***

Q1) a) Explain the following (Any 3) : **[9]**

i) Reliability

ii) Hazard Rate

iii) Mean Time to failure (MTTF)

iv) Probability density functions of failure

b) State the importance and role of the reliability function in an organization. Distinguish between Quality and Reliability of a product. **[8]**

OR

Q2) a) Explain following probability distributions (Any 2) : **[8]**

i) Binomial distribution

ii) Normal distribution

iii) Weibull distribution

b) A cinema house gets electric power from a generator run by a diesel engine. On a given day, the probability that the generator is down (Event A) is 0.025 and the probability that the diesel engine is down (Event B) is 0.04, what the probability that the cinema house will have power on any given day? Assume that the occurrence of event A & B are independent of each other. **[4]**

c) Draw & explain a specimen 'Bath Tub Curve'. **[5]**

P.T.O.

Q3) a) A system consists of three components 1, 2 and 3 having failure rates $\lambda_1 = 0.006$, $\lambda_1 = 0.004$ and $\lambda_3 = 0.001$ per hour respectively. Assuming mission time of 20 hrs. and system reliability of 0.92, find failure rates as well as reliability of each subsystem for entire mission period by ARINC' method of Reliability Allocation. **[8]**

b) Calculate the reliability of the system shown in following Fig. (1). The value shows the reliability of individual components in the system. **[10]**

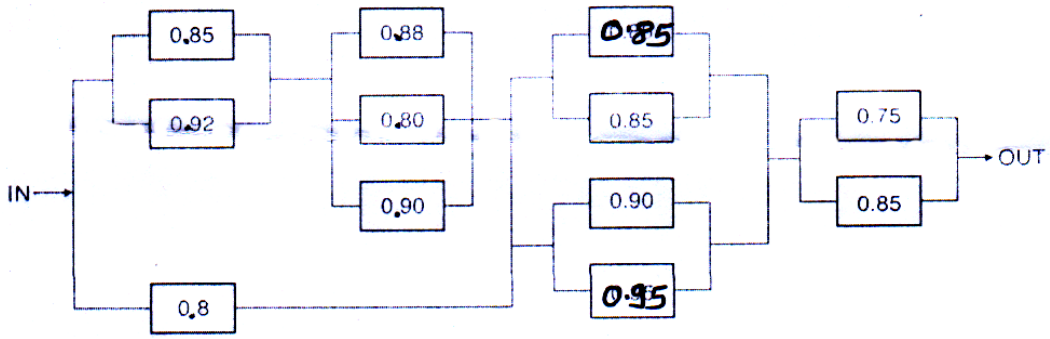

Fig. (1)

OR

Q4) a) A system consists of three units connected in series, with reliabilities $R_1 = 0.70$, $R_2 = 0.80$ and $R_3 = 0.90$. It is desired that the reliability of the system to be 0.65. How should this be apportioned among three units by Minimum Effort Method? **[8]**

b) Evaluate the Reliability of System shown in following Fig. (2) By Conditional Probability Approach. **[10]**

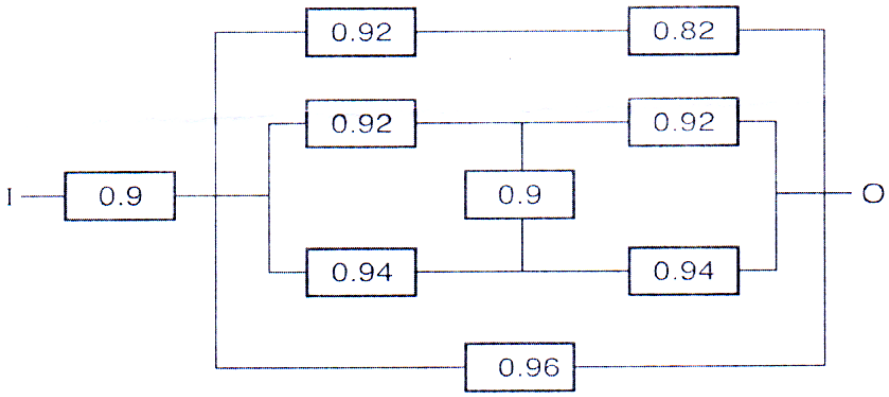

Fig. (2)

Q5) a) What is FMECA? Give the procedure of FMECA. State importance of RPN in FMECA, with example. **[8]**

b) Fig. (3) shows three valves A, B and C, a pump (P), a pipeline and a tank to collect water pumped from the pond. Construct the fault tree corresponding to the top event "No Flow of Water Into The Tank". **[9]**

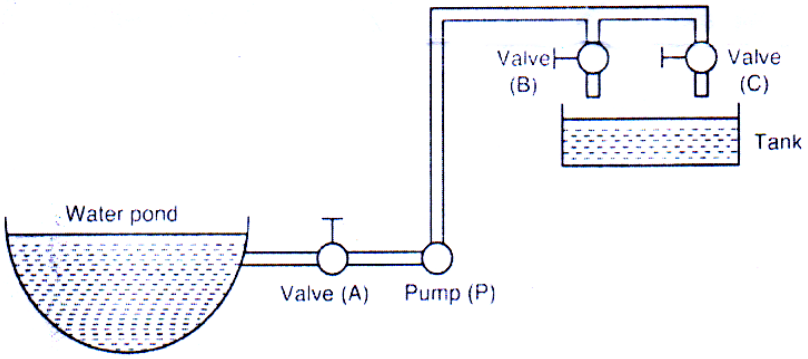

Fig. (3)

OR

Q6) a) Write Short notes on (Any 2) : **[8]**

i) Fault Tree Analysis

ii) Ishikawa for failure representation (Cause Effect Diagram)

iii) Symbols used in ETA

b) For an emergency operation theatre in a hospital, the power is obtained from the main city supply through a transformer connected in series. To ensure an uninterrupted supply, an auxiliary generator is also used with a suitable switch over. Refer Fig. (4). The probability of failure of the main city supply is 0.01 and transformer reliability is 0.996. The auxiliary power generator has a reliability factor of 0.99. Draw a block diagram for the system. Construct the fault tree and calculate reliability of the system. **[9]**

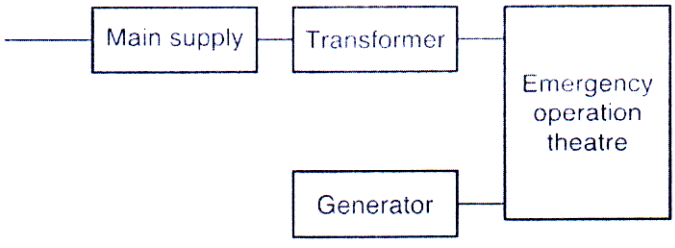

Fig. (4)

Q7) a) Define Maintainability and Availability For the system from the following data collected at a plant. **[8]**

Mean time before failure : 35 Hrs.

Mean time to repair : 10 Hrs.

Administrative and logistic time : 50% of MTTR

Calculate operational availability and inherent availability of the plant.

b) A beam is subjected to mean stress 180 N/mm^2 and standard deviation 20 N/mm^2. The mean strength of beam material is 280 N/mm^2 and standard deviation 40 N/mm^2. (Given : for Z = –2.24, Area = 0.4875) **[10]**

Determine :

i) Reliability of the beam.

ii) Minimum factor of safety.

iii) Average factor of safety.

OR

Q8) a) What is meant by Accelerated test in evaluating Reliability? Give at least six point differences between Highly Accelerated Life Testing (HALT) and Accelerated Life Testing (ALT). **[8]**

b) The following data is obtained while Accelerated life testing of a rubber Gasket : **[10]**

Failure No.	1	2	3	4	5	6	7	8	9
MTTF (hrs.)	24	22	12	28	35	38	30	19	25

Find out the reliability and plot the variation of reliability against time using :

i) Mean ranking method and

ii) Median ranking method

□□□

Total No. of Questions : 8]

SEAT No. :

P-6679

[Total No. of Pages : 2

[6181]-247

B.E. (Mechanical)

ENERGY AUDIT AND MANAGEMENT

(2019 Pattern) (Semester - VIII) (402050B) (Elective - V)

Time : 2½ Hours] ***[Max. Marks : 70***

Instructions to the candidates :

1) ***Answer Q.1 or Q.2, Q.3 or Q.4, Q.5 or Q.6, Q.7 or Q.8.***
2) ***Neat diagrams must be drawn wherever necessary.***
3) ***Figures to the right side indicate full marks.***
4) ***Use of calculator is allowed.***
5) ***Assume suitable data if necessary.***

Q1) a) What is sensitivity and risk analysis? Explain the factors affecting sensitivity and risk analysis. **[9]**

b) Investment for an energy proposal is Rs.10.00 lakhs, Annual savings for the first three years is 1,50,000, 2,00,000 & 3,00,000. Considering cost of capital as 10%, what is the net present value of the proposal? Will project meet the firms expectation? **[8]**

OR

Q2) a) Cost of an heat exchanger is Rs.1.00 lakhs .Calculate simple payback period considering annual saving potential of Rs.60,000/- and annual operating cost of Rs. 15,000/-. **[5]**

b) Explain various types of cash flows for an investment. **[4]**

c) Describe the factors influencing costing of steam, compressed air, natural gas and Electricity. **[8]**

Q3) a) Calculate pump efficiency from the data given: pump flow is 0.40 m^3/s, power absorbed: 325 KW, suction head+1m, Delivery head 55m, motor efficiency 88%, type of drive: direct coupled, density of water 996 kg/m^3. **[10]**

b) Enlist the types of stream traps and explain any two with a neat sketch.**[8]**

OR

P.T.O.

Q4) a) What are different Energy Conservation Opportunities in Boiler System? **[8]**

b) A centrifugal pump is pumping $85m^3/hr$ of water and pressure rise in the pump is $6kg/cm^2$. If power drawn by motor is 25KW. Find out the pump efficiency. Assume motor efficiency as 90% & water density as 998 Kg/m^3. **[10]**

Q5) a) Explain in detail the step by step approach for maximum demand control. **[7]**

b) The lighting connected load for the small industry consisting of 140 Fluorescent tubes of 55 W each with magnetic ballast. In first option, the magnetic ballast of Fluorescent tubes is replaced by electronic ballast & power consumption of same fluorescent tubes reduces to 40W. Calculate the simple payback period of above replacement if cost of electronic ballast is Rs.110. In second option, fluorescent tubes are replaced by energy efficient fluorescent tubes of 20 W & cost of Rs. 450 each. Calculate simple payback period. Which energy saving option is better & why? Consider usage of 16 hrs per day & an electrical tariff of Rs. 4 per KWh. **[10]**

OR

Q6) a) Discuss how selection and location of transformer affect the power factor. **[7]**

b) The connected load for the hostel are as below.

i) 190 Fluorescent tubes of 55W each with magnetic ballast.

ii) 20 Fluorescent tubes of 40W each with electric ballast.

iii) 20 old fan of 100W each.

It is decided to replace the all tubes with new tubes of 20W and all Old fans by a new fan of 80W. Considering usage of 6Hrs per day & an electrical tariff of Rs.4 per KWh. Calculate energy saving of tubes & fans replacement. **[10]**

Q7) a) Explain the topping cycle & the bottoming cycle of co-generation with examples. **[8]**

b) Write a short note on i) CDM projects ii) Carbon credit. **[10]**

OR

Q8) a) Explain cogeneration cycle with sketch and suitable examples. **[8]**

b) Explain the various types of recuperators with schematic sketch. **[10]**

▽▽▽▽

Total No. of Questions : 8]

SEAT No. :

P-6680

[Total No. of Pages : 2

[6181]-248

B.E. (Mechanical)

MANUFACTURING SYSTEM AND SIMULATION

(2019 Pattern) (Semester - VIII) (402050C) (Elective - V)

Time : 2½ Hours] ***[Max. Marks : 70***

Instructions to the candidates :

1) ***Answer Q.1 or Q.2, Q.3 or Q.4, Q.5 or Q.6, Q.7 or Q.8.***
2) ***Draw suitable neat diagrams, whenever necessary.***
3) ***Figures to the right indicate full marks.***
4) ***Assume suitable data if necessary.***

Q1) a) Explain Manufacturing simulation with its advantages, disadvantages, Applications. **[9]**

b) What is the difference between System Dynamics (SD) and Agent-Based Modeling (ABM)? **[8]**

OR

Q2) a) Explain Petri net Manufacturing Simulation with neat diagram? **[9]**

b) Explain Intelligent simulation using Artificial Intelligence (AI) techniques? **[8]**

Q3) a) How to improve the Quality of Evaluation Data in Simulation Improvement Projects? **[9]**

b) Explain different systems and processes used by manufacturers across industries? **[9]**

OR

Q4) a) What are Different Sources of collecting input data? Explain in details? **[9]**

b) Explain phases of input modeling for simulation? **[9]**

P.T.O.

Q5) a) Explain the purpose of model verification in operational model? **[9]**

b) Explain the Iterative process of calibrating a model. **[8]**

OR

Q6) a) Explain possible validation techniques in order of increasing cost-to-value ratios? **[9]**

b) Explain Validation Model Assumptions in details? **[8]**

Q7) a) Explain different Applications of Discrete-Event Simulation to Capacity Planning at a Commercial Airport? **[9]**

b) Explain Cellular manufacturing system selection with multi-Lean criteria and simulation? **[9]**

OR

Q8) a) How Material Handling Equipment's helps to improve manufacturing simulation? **[9]**

b) Explain role of robotics in Discrete Event Simulation? **[9]**

▽▽▽▽

Total No. of Questions : 8]

SEAT No. :

P-6681

[Total No. of Pages : 3

[6181]-249
B.E. (Mechanical)
ENGINEERING ECONOMICS AND FINANCIAL MANAGEMENT (Elective-V)
(2019 Pattern) (Semester - VIII) (402050D)

Time : 2½ Hours] ***[Max. Marks : 70***

Instructions to the candidates :

1) ***Answer Q.1 or Q.2, Q.3 or Q.4, Q.5 or Q.6, Q.7 or Q.8.***
2) ***Figures to the right indicate full marks.***
3) ***Use of an electronic calculator is allowed.***
4) ***Assume suitable data, if necessary.***

Q1) a) What are the main features of the Cash Flow Statement? **[6]**

b) From the following ledger balances of Regal Limited as on 31st March 2015. You are required to prepare the Balance Sheet as on 31st March 2015 as per Revised schedule III of the Indian Companies Act. **[12]**

Particulars	Rs.	Particulars	Rs.
Office Equipment	4,80,600	General Reserve	4,15,000
9% debentures in APCO Ltd.	2,45,000	Creditors for Goods	1,68,500
Loose Tools	1,63,000	Creditors for expenses	36,000
Plant & machinery	18,00,000	Cash Credit	75,000
Computer software	83,250	Mortgage loan	3,10,000
Debtors for goods	1,90,000	8% Preference share capital	5,50,000
Advertisement (unwritten off)	30,000	Equity share capital	15,00,000
Stores & Spares	1,00,200	Staff welfare fund	85,000
Interest accrued on investment	51,000	Provision for Taxation	26,550
Cash at Bank	23,000		

OR

P.T.O.

Q2) a) Explain the treatment of foreign exchange losses while preparing the Cash Flow Statement? **[6]**

b) Prepare Balance sheet of Darshan Ltd., in the prescribed pro forma as on 31st March 2015 from the following Trial balance. **[12]**

Trial Balance as on 31st March 2015

Particulars	Rs.	Particulars	Rs.
Lease hold property	16,00,000	Share capital	20,65,000
Bank balance	1,05,000	Staff provident fund	8,00,000
Plant & Machinery	9,00,000	Capital redemption reserve	2,20,000
Goodwill	3,00,000	General reserve	1,90,000
Investment in a subsidiary co	11,50,000		
P & L A/c	70,000	Deposits from public	9,00,000
Stock of finished goods	1,20,000	Accounts payable	2,10,000
Accounts receivable	2,40,000	Short Term loan from SBI	1,78,000
Preliminary Expenses	39,000	Unclaimed dividend	6,000
Underwriting commission	45,000		
	45,69,000		45,69,000

Q3) a) State the objectives of budgetary control. **[9]**

b) What is Tax planning and how it differs from financial planning? **[8]**

OR

Q4) a) What are the effects of inflation on budgeting and budgetary control? **[9]**

b) What is zero base budgeting? State its advantages and disadvantages. **[8]**

Q5) a) Explain about the steps involved in export-import procedures. **[9]**

b) Define money and give its classification. **[8]**

OR

Q6) a) What is value of money and how it affects international business? **[9]**

b) What are the functions and qualities of money? **[8]**

Q7) a) List and explain the traditional sources of funds. **[10]**

b) What is business valuation? Explain any three Valuation Methods. **[8]**

OR

Q8) a) Write short note on : **[10]**

i) Accelerators

ii) Crowd Funding

iii) Venture Capitals

iv) Sensitivity Analysis

v) Harvesting-Exit Strategies

b) Explain Funding Processes. **[8]**



Total No. of Questions : 8]

SEAT No. : ____

P-6682

[Total No. of Pages : 2

[6181]-250

B.E. (Mechanical)

(Elective - V) ORGANIZATIONAL INFORMATICS

(2019 Pattern) (Semester - VIII) (402050E)

Time : 2½ Hours] ***[Max. Marks : 70***

Instructions to the candidates:

1) ***Answer Q.1 or Q2, Q3 or Q4, Q5 or Q6, Q7 or Q8.***
2) ***Neat diagrams must be drawn wherever necessary.***
3) ***Figures to the right side indicate full marks.***
4) ***Assume Suitable data if necessary.***

Q1) a) Enlist PLM software and write features of it. **[9]**

b) Write Note on following for Product data issues. **[9]**

i) Archiving

ii) Availability

iii) Confidentiality

OR

Q2) a) What are Product Data Management Best Practices For Manufacturers? **[9]**

b) What are phases of product development? **[9]**

Q3) a) Enlist various ERP Software and compare them **[9]**

b) Write short Note on : **[8]**

i) MRP-I

ii) MRP-II

OR

Q4) a) Explain the term **[9]**

i) Manufacturing Information System in lean manufacturing

ii) Industry 5.0. environment

iii) Business blueprint (BBP)

b) Explain manufacturing database Integration. **[8]**

P.T.O.

Q5) a) What are the functions of manufacturing execution system? **[9]**

b) Explain production scheduling in manufacturing execution system. **[8]**

OR

Q6) a) Explain various models in details : **[9]**

i) Detailed production scheduling.

ii) Product definition management.

iii) Production Execution management

b) Explain Workflow management in MES. **[8]**

Q7) a) Explain the following business models with example. **[9]**

i) B2B

ii) EDI

iii) B2C

b) Write down the role of Intranets and Extranets? **[9]**

OR

Q8) a) Explain the following term. **[9]**

i) Electronic Commerce

ii) Digital Organization

b) Explain the term - Information requirement & system for SCM, CRM & SRM. **[9]**

Total No. of Questions : 8]

SEAT No. :

P-6683

[Total No. of Pages : 2

[6181]-251

B.E. (Mechanical Engineering)

COMPUTATIONAL MULTI BODY DYNAMICS

(2019 Pattern) (Semester - VIII) (402050F) (Elective - V)

Time : 2½ Hours] ***[Max. Marks : 70***

Instructions to the candidates:

1) ***Solve Q.1 or Q.2, Q.3 or Q.4, Q.5 or Q.6, Q.7 or Q.8.***
2) ***Neat diagrams must be drawn wherever necessary.***
3) ***Figures to the right side indicate full marks.***
4) ***Use of electronic pocket Calculator is allowed.***
5) ***Assume Suitable data if necessary.***

Q1) a) Derive the Newton-Euler equation in the Matrix form. **[8]**

b) Figure 1 b shows a system of two particles in a plane constrained to move along the rod using frictionless prismatic joints. The particles are supported by two springs. The equilibrium condition is determined by a constant force of magnitude 'P' acting on particle 2. Formulate the problem as MBD system and solve it. **[10]**

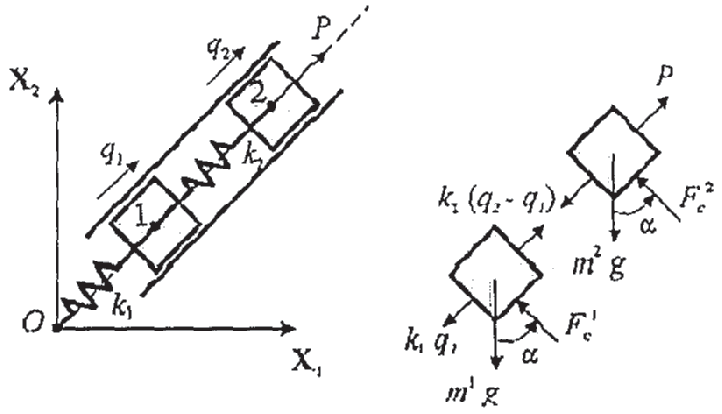

Fig. 1b

OR

Q2) a) Compare the Holonomic and Non-holonomic constraints of a spatial rigid body. **[8]**

b) Discuss Newton's Equation and Euler's Equation used for the dynamic analysis of a spatial object. **[10]**

P.T.O.

Q3) a) Determine the constrained equation for a revolute joint in the body-coordinate formulation. **[9]**

b) Determine the velocity constraints for a translational joint. **[8]**

OR

Q4) a) Determine the velocity equations of a simple four-bar mechanism using a suitable coordinate system. **[9]**

b) Describe a Rigid joint, and explain it with a suitable example. **[8]**

Q5) a) Discuss the procedure to determine the reference frame to locate a body in space. **[9]**

b) A rigid body experiences only a small rotation about the axis of rotation b. If b is the vector defined by $b = [22\ -1]^T$ and if the angle of rotation is 3°, determine the transformation matrix for this infinitesimal rotation. **[9]**

OR

Q6) a) What are the constraints required for the description in space of common kinematic pairs (revolute, prismatic, cylindrical, spherical, screw)? **[10]**

b) Define the Euler angles and determine the transformation matrix using them. **[8]**

Q7) a) Enlist different external forces acting on a body in space, thus elaborating on any one in detail. **[8]**

b) What is Kinematic Simulation software? Explain the working of Commercial Kinematic Simulation software. **[9]**

OR

Q8) a) What is Recursive Dynamics? How to do Computation of generalized forces and reaction forces using Recursive Inverse Dynamics for spatial system? **[9]**

b) Determine the reaction force in a joint using Newton's third law. **[8]**

⌘⌘⌘

Total No. of Questions : 8]

SEAT No. :

P-6684

[Total No. of Pages : 2

[6181]-252

B.E. (Mechanical Engineering)

PROCESS EQUIPMENT DESIGN

(2019 Pattern) (Semester - VIII) (402051A) (Elective-VI)

Time : 2½ Hours] ***[Max. Marks : 70***

Instructions to the candidates :

1) ***Answer Q.1 or Q.2, Q.3 or Q.4, Q.5 or Q.6, Q.7 or Q.8.***
2) ***Neat diagrams must be drawn wherever necessary.***
3) ***Figures to the right indicate full marks.***
4) ***Use of an electronic calculator is allowed.***
5) ***Assume suitable data, if necessary.***

Q1) a) Explain design of thick cylinders subjected to internal pressure based on maximum principal strain theory and derive equation to find thickness of cylinder wall. **[9]**

b) What are methods of pre-stressing of cylinders, Explain autofrettage in detail with neat labeled sketch. **[9]**

OR

Q2) a) A closed cylinder of 300 mm inner diameter is to be designed to with stand an internal pressure of 25 MPa. The cylinder is to be made of plain carbon steel 15C8. (Sut=440 N/mm^2, Syt 240 N/mm^2 and υ = 0.29). If the factor of safety based on yield strength is 1.5, determine the thickness of cylinder wall using : **[9]**

i) Maximum principal stress theory:

ii) Maximum principal strain theory:

iii) Maximum shear stress theory:

iv) Distortion energy theory:

b) What are different types of supports used in horizontal and vertical pressure vessels? Explain bracket support with neat labeled sketch. **[9]**

P.T.O.

Q3) a) Explain the three types of floating roofs used in floating roof type tank with sketches. **[9]**

b) Explain spherical vessel with neat labeled sketch used for storage of gasses. **[8]**

OR

Q4) a) Explain shell and tube type of heat exchanger with neat labeled sketch.**[8]**

b) List the different types of mechanical agitators. Explain any one agitator with neat labeled sketch. **[9]**

Q5) a) Describe with neat labeled sketch, the construction and working of a rotameter. **[9]**

b) Discuss with neat labeled sketch, any type of flow meter used to measure flow of highly corrosive liquids involving measurement of erosive slurries. **[9]**

OR

Q6) a) Define Process load, Process Lag and Self-regulation. **[6]**

b) State variables of Automatic Process control. **[6]**

c) What are the principal questions that arise during the design of feedback controllers? Discuss them on the basis of a physical example. **[6]**

Q7) a) List the fabrication methods used for manufacturing of Pressure Vessels Explain bending operation used in manufacturing of pressure vessels.**[8]**

b) List NDT methods are used for detection of internal defects. Discuss Explain any two methods used for detection of internal defects. **[9]**

OR

Q8) a) Explain how AI/IOT can be used to overcome challenges at Fuel Pumping station. **[8]**

b) Differentiate between Destructive and Non destructive Testing. Explain Magnetic Particle test used for detection of surface defect. **[9]**

Total No. of Questions : 8]

SEAT No. : ____

P-6685

[Total No. of Pages : 3

[6181]-253

B.E. (Mechanical Engineering)

RENEWABLE ENERGY TECHNOLOGIES

(2019 Pattern) (Semester - VIII) (402051B) (Elective - VI)

Time : 2½ Hours] ***[Max. Marks : 70***

Instructions to the candidates:

1) ***Solve Q.1 or Q.2, Q.3 or Q.4, Q.5 or Q.6, Q.7 or Q.8.***
2) ***Neat diagrams must be drawn wherever necessary.***
3) ***Figures to the right indicate full marks.***
4) ***Use of electronic pocket calculator is allowed.***
5) ***Assume suitable data, if necessary.***

Q1) a) Explain the effect of radiation intensity and temperature on short circuit current, open circuit voltage and power generated in PV cell? **[6]**

b) Explain the term fill factor and its importance as a performance parameter for a solar cell. **[6]**

c) Why is the Levelized Cost of Energy Important? How do you calculate the levelized cost of energy? **[6]**

OR

Q2) a) What are the advantages and disadvantages of solar cell? What is the concept of satellite solar station? **[8]**

b) A house has the following electrical appliance usage: **[10]**

One 18 Watt fluorescent lamp with electronic ballast used 4 hours per day.

One 60 Watt fan used for 2 hours per day.

One 75 Watt refrigerator that runs 24 hours per day with compressor run 12 hours and off 12 hours.

The system will be powered by 12 V_{dc}, 110 W_p PV module.

i) Determine power consumed by devices per day.

ii) Determine capacity of panel assuming 30% energy losses.

P.T.O.

iii) Size the PV panel assuming panel generation factor (PGF) = 3.4

iv) Number of solar panel required.

v) Inverter sizing.

vi) Battery sizing assuming 15% battery losses, 0.6 depth of discharge and three days of autonomy.

Q3) a) What are the basic components of wind energy conversion system? Explain with a neat diagram. **[6]**

b) A wind generator with a 8 m dia. blade has a cut-in Wind speed of 5 m/s at which velocity generates 1.5 kW of power. Determine the efficiency of wind turbine generator set and horizontal force exerted by the wind on the supporting mast and maximum torque. What is the effect of doubling wind velocity to 10 m/s on power generation and the horizontal force and torque? Given: density of air = 1.2 kg/m^3. **[8]**

c) Explain the limitations and possible environmental impacts of wind energy. **[4]**

OR

Q4) a) What is the total power of a wind stream? What do you mean by coefficient of performance and tip speed ratio of a windmill? On what factors does the performance of windmills depend? **[8]**

b) Derive the expression for power extracted from wind considering Betz model of a wind turbine. What is the maximum theoretical power that can be extracted and under what condition? **[10]**

Q5) a) What are the advantages and disadvantages of offshore wind farms? **[6]**

b) Give the stepwise process of estimating number of PV modules required in series and parallel connection and their power calculation. **[6]**

c) If a 95 kW turbine produces 250000 kWh in a year, Find its annual energy output and capacity factor. **[5]**

OR

Q6) a) Write note on how to enhance performance of PV array. **[6]**

b) What is main criterion for selecting the site for a wind farm? **[6]**

c) What are the different components of grid connected PV systems? **[5]**

Q7) a) Write short notes on Biomass resource and their classification. **[6]**

b) Write a short note on bio-gasification. **[5]**

c) What are biomass conversion technologies? Draw a schematic diagram to explain various conversion technologies and products. **[6]**

OR

Q8) a) Explain fermentation process of producing ethanol from sugarcane. **[6]**

b) Distinguish between Fixed and Float drum bio-digesters. **[4]**

c) A biomass gasifier is used to run a compression ignition engine. The engine operates in the dual fuel mode with 80 % diesel replacement. The biomass feeding rate for the gasifier is 180 kg/hr. Calculate the power produced by the engine, if the engine efficiency is 30% and calorific value of biomass is 16000 kJ/kg. Consider efficiency of the gasifier is 0.70. **[7]**

Total No. of Questions : 8]

SEAT No. :

P-6686

[Total No. of Pages : 2

[6181]-254

B.E. (Mechanical Engineering)

AUTOMATION AND ROBOTICS

(2019 Pattern) (Semester - VIII) (402051C) (Elective - VI)

Time : 2½ Hours] *[Max. Marks : 70*

Instructions to the candidates:

1) ***Answer Q.1 or Q.2, Q.3 or Q.4, Q.5 or Q.6, Q.7 or Q.8.***
2) ***Neat diagrams must be drawn wherever necessary.***
3) ***Figures to the right side indicate full marks.***
4) ***Use of electronic pocket calculator is allowed.***
5) ***Assume suitable data, if necessary.***

Q1) a) Explain and illustrate Pneumatic Drives and its components used in Robotics. **[9]**

b) Explain in brief : **[9]**

i) DC Servomotors

ii) Stepper motors

iii) AC servo motors

iv) Brushless DC motors (BLDC)

OR

Q2) a) Why servomotors are preferred as compared with stepper motor in robot applications? **[6]**

b) What is an actuator? Explain and illustrate Micro actuators and their selection. **[6]**

c) Explain and any two types of motion converter. **[6]**

Q3) a) What is Compliance used in Robotics? What is the significance of Compliance? **[6]**

b) Describe the Construction, Working, Selection Considerations of Grippers. **[6]**

c) Describe the Construction, Working of Touch sensor. **[5]**

P.T.O.

OR

Q4) a) Explain the Types of End-effectors and Applications used in Robotics. **[6]**

b) Describe the Construction and Working of Encoders. **[5]**

c) What are the Transducers? Explain their Classification. **[6]**

Q5) a) Explain DH Parameters with one example of robot. **[8]**

b) Compare, explain and illustrate Direct and Inverse Kinematics applicable to Robotics. **[10]**

OR

Q6) a) Establish the mathematical expressions of forward transformation of a spatial 2 degree of freedom arm with RP and PR two joints manipulators. **[8]**

b) Explain and illustrate Lagrangian and Eulerian approach for formulation of equations of motion of planar two link. **[10]**

Q7) a) What are the uses of Robots in Manufacturing Applications? **[8]**

b) List and explain the considerations in Robot Cell Design and selection. **[9]**

OR

Q8) a) What are the different Types of Robot Programming? Explain and illustrate in details for applications like Palletizing. **[8]**

b) Explain and illustrate the following terms related to Mobile Robots : **[9]**

i) Wheeled robots

ii) Legged robots

iii) Tracked robots

⌘⌘⌘

Total No. of Questions : 8]

SEAT No. :

P-6687

[Total No. of Pages : 2

[6181]-255

B.E. (Mechanical Engineering)

INDUSTRIAL PSYCHOLOGY AND ORGANIZATIONAL BEHAVIOUR

(2019 Pattern) (Semester - VIII) (402051D) (Elective - VI)

Time : 2½ Hours] *[Max. Marks : 70*

Instructions to the candidates:

1) ***Solve Q.1 or Q.2, Q.3 or Q.4, Q.5 or Q.6, Q.7 or Q.8.***
2) ***Neat diagrams must be drawn wherever necessary.***
3) ***Figures to the right indicate full marks.***

Q1) a) What are the factors influencing on Job Satisfaction and discuss the ways of reducing dissatisfaction? **[8]**

b) What is leadership? Identify the different leadership styles. Explain anyone. **[9]**

OR

Q2) a) Explain the process of recruitment. **[5]**

b) What do you mean by time and stress management? **[6]**

c) What are different health and safety considerations in industry? **[6]**

Q3) a) Elaborate the process of learning. **[6]**

b) Explain the concept of Ethics in organizations. **[5]**

c) Write notes on theories of organization (Any Two) : **[6]**

i) Classical Theory

ii) Human Relations Theory

iii) Contingency Theory

OR

Q4) a) Discuss organizational behaviour. What are the different factors affecting behaviour in organizations? **[8]**

b) Describe a social system. Discuss the elements of a social system on which the whole social system works. **[9]**

P.T.O.

Q5) a) Discuss the concept of Transactional Analysis. Explain Johari Window. **[9]**

b) What are the different classifications of groups? What are the stages in group development? **[9]**

OR

Q6) a) What are the different causes of conflicts? **[6]**

b) Explain the Characteristics of successful leaders. **[6]**

c) Discuss how teamwork affects in organizational culture. **[6]**

Q7) a) What are key factors of good organizational culture? **[6]**

b) Explain concept of Organizational development. **[6]**

c) Write notes on (Any Two) : **[6]**

i) Classical organizational theory

ii) Humanistic Theory

iii) Open-System Theory

OR

Q8) a) Explain the concept of organizational culture. What is the dominant and motivating culture? **[9]**

b) Discuss causes and forces on organizational change and Resistance of change. **[9]**



Total No. of Questions : 8]

SEAT No. : ____

P-6688

[Total No. of Pages : 2

[6181]-256

B.E. (Mechanical Engineering)

ELECTRICAL AND HYBRID VEHICLE

(2019 Pattern) (Semester - VIII) (Elective - VI) (402051E)

Time : 2½ Hours] ***[Max. Marks : 70***

Instructions to the candidates :

1) ***Solve Q.1 or Q.2, Q.3 or Q.4, Q.5 or Q.6, Q.7 or Q.8.***
2) ***Neat diagrams must be drawn wherever necessary.***
3) ***Figures to the right indicate full marks.***
4) ***Use of electronic pocket calculator is allowed.***
5) ***Assume suitable data if necessary.***

Q1) a) Describe and illustrate the structural configuration of motor layout. **[6]**

b) Describe and illustrate the energy storage system types and packs classification. **[6]**

c) Explain and estimate the battery performance parameters. **[6]**

OR

Q2) a) Short note on Battery thermal management system (cooling, thermal protection, control, safety and maintenance). **[9]**

b) Determine the rating of motor required for following data: Gross curb weight (GCW) = 150Kg Battery rating = 30Ah Working voltage = 72V Efficiency of motor = 95% Acceleration required = 0 to 60 km/hr in 10 seconds Road gradient = 10° Vehicle range = 150Km

Take road friction = 0.01, COF of drag 0.9, density of air = 1.2kg/m^3, wheel radius = 0.3m, frontal area of vehicle 0.6m^2. **[9]**

Q3) a) Differentiate between mechanical differential and electric differential. **[6]**

b) Explain and illustrate fuel efficiency analysis. **[5]**

c) Describe and illustrate the brake system and its types. **[6]**

OR

P.T.O.

Q4) a) Describe and illustrate various electric drive-train topologies and their types (Two-Wheeler, Three-Wheeler, Four-Wheeler Electric Vehicle Configurations). **[9]**

b) Explain with suitable equations rolling resistance, aerodynamic drag/lift, grading resistance, road resistance, acceleration resistance, total driving resistance. **[8]**

Q5) a) State and explain the different types of frames used in electric vehicle and the associated Chassis/Frame building problems. **[9]**

b) Explain need of vehicle testing. What are the national/ international testing/ regulation/licensing/ approval organizations and agencies? **[9]**

OR

Q6) a) Explain the problems associated with Retrofitting. **[6]**

b) What is the homologation of vehicles? **[6]**

c) Describe and illustrate the body loads based on varieties of electric vehicle configurations. **[6]**

Q7) a) What are the Requirements for Charging System? **[8]**

b) Describe and illustrate a typical structure of battery management systems (bms) along with its necessity. **[9]**

OR

Q8) a) Describe and illustrate charger architectures. **[8]**

b) Explain following : grid voltages, frequencies and wiring, real power, apparent power and power factor. **[9]**

▽▽▽▽

Total No. of Questions : 8]

SEAT No. :

P6689

[Total No. of Pages : 2

[6181] - 261

B.E. (Mechanical Sandwich)

ENERGY ENGINEERING AND MANAGEMENT

(2019 Pattern) (Semester - VII) (402064) (Self Study - III) - 01

Time : 2 ½ Hours] ***[Max. Marks : 70***

Instructions to the candidates:

1) ***Neat diagrams must be drawn wherever necessary.***
2) ***Figures to the right side indicate full marks.***
3) ***Use of calculator is allowed.***
4) ***Assume suitable data, if necessary.***

Q1) a) State the advantages and disadvantages of solar thermal power plant over conventional power plant. **[8]**

b) Why wind energy is preferred? Write in brief its advantages and disadvantages. **[9]**

OR

Q2) a) Discuss the working of open cycle OTEC system with the help of a neat sketch. **[8]**

b) Explain working principal of fuel cell. Compare the fuel cell with conventional power plant. **[9]**

Q3) a) Explain current energy scenario in India. **[9]**

b) What are the principles of energy management and need of managerial skills in energy management? **[9]**

OR

Q4) a) Describe energy and environment. **[9]**

b) Write short note on Energy policy. **[9]**

P.T.O.

Q5) a) Give a typical energy audit reporting format. **[8]**

b) Which information is to be collected during detailed energy audit? **[9]**

OR

Q6) a) What is the need of energy audit? What are the areas that need to be focused during pre-audit phase? **[8]**

b) List various energy audit software. Write advantages of using Energy audit software. **[9]**

Q7) a) Write short note on : **[9]**

i) NPV

ii) ROI

iii) Simple payback period

b) Explain the concept of time value of money with suitable example. **[9]**

OR

Q8) a) Differentiate between ROI & IRR. **[9]**

b) What is sensitivity analysis?List different factors considered for sensitivity analysis. **[9]**

❄ ❄ ❄

Total No. of Questions : 8]

SEAT No. : ____

P6690

[Total No. of Pages : 2

[6181] - 262

B.E. (Mechanical - Sandwich)

INDUSTRIAL ENGINEERING AND ORGANIZATIONAL MANAGEMENT

(2019 Pattern) (Semester - VII) (402065) (Self - Study - IV)

Time : 2 ½ Hours] ***[Max. Marks : 70***

Instructions to the candidates:

1) ***All questions are compulsory.***
2) ***Neat diagrams must be drawn wherever necessary.***
3) ***Figures to the right indicate full marks.***
4) ***Use of Scientific Calculator allowed.***
5) ***Assume Suitable data where ever necessary.***

Q1) a) Define plant layout. What are various factors involved in selection of site for good plant. **[7]**

b) Explain product layout with advantage and disadvantage. **[6]**

c) Write short note on: Selection criteria for material handling. **[5]**

OR

Q2) a) Describe the factors to be considered while finalizing the plant location with suitable illustration. **[7]**

b) Categorize factors responsible for selection of plant location for a water pump manufacturing company. **[6]**

c) State and explain the principles of material handling. **[5]**

Q3) a) What are the different techniques for production control? **[7]**

b) Explain the functions of production planning and control. **[6]**

c) Discuss MRP-I with suitable example. **[4]**

OR

Q4) a) What is demand forecasting? **[7]**

b) Define inventory and its importance. Enlist different types of inventories. **[6]**

c) Write a short note on capacity planning. **[4]**

P.T.O.

Q5) a) Define Process design and explain the framework of process design by means of block diagram. **[7]**

b) How do you define group technology? Describe with suitable example. **[6]**

c) What are applications of CPM / PERT? **[5]**

OR

Q6) a) What is assembly line balancing? Explain in detail. **[7]**

b) What is PERT? Explain objectives in the analysis through PERT. **[6]**

c) Enlist and explain CPM/PERT chart terminology. **[5]**

Q7) a) Explain principles of ergonomics. **[7]**

b) Explain techniques of value analysis. **[6]**

c) Comment on concept of key result area. **[4]**

OR

Q8) a) Explain qualitative and quantitative methods of job evaluation. **[7]**

b) Define incentives and explain its importance. **[6]**

c) What is social significance of ergonomics? **[4]**

❄ ❄ ❄

Total No. of Questions : 8]

SEAT No. :

P-6691

[Total No. of Pages : 4

[6181]-263

B.E. (Mechanical Sandwich)

DESIGN OF TRANSMISSION ELEMENTS

(2019 Pattern) (Semester - VIII) (402066)

Time : 3 Hours] ***[Max. Marks : 70***

Instructions to the candidates:

1) ***Answer Q1 or Q2, Q3 or Q4, Q5 or Q6, Q7 or Q8.***
2) ***Answers in One answer Books.***
3) ***Figures to the right indicate full marks.***
4) ***Assume suitable data, if necessary.***

Q1) a) Explain the procedure for selection of bearing from manufacturer's catalogue. **[6]**

b) A single row deep grove ball bearing is subjected to the following work cycle **[12]**

Sr No.	Radial load (Fr) in N	Thrust load (Fa) in N	Radial factor (X)	Service factor	Speed (rpm)	Fraction of cycle
1	2000	1200	1.0	3.0	400	1/10
2	1500	1000	0.56	1.5	500	1/10
3	1000	1500	0.56	2.0	600	1/5
4	1200	2000	1.0	1.0	800	3/5

Apply the concept of design and select the suitable bearing : The rated life of the bearing is 15000 hrs. Assume radial and axial load factor to be 1.0 & 1.5 respectively and inner race rotates. Use following data

Bearing number	6015	6215	6315	6415
Dynamic capacity 'C' KN	31	52	90	120

OR

P.T.O.

Q2) a) A 30 HP (22.065 KW) electric motor is directly coupled to a shaft of 25mm diameter, which is supported by two cylindrical roller bearing. The shaft transmits power to another shaft through a flat pulley of 300mm diameter which is placed mid way between the two bearings. The coefficient of friction between the belt and pulley is 0.3, while angle of lap is 180 degree. The belt is horizontal. The load factor is 1.5 and the expected life of the bearing is 50,000 hrs, Apply the concept of design and select the suitable bearing from manufacturer's catalog. Use following table

Bearing No.	NU2205	NU2305
Basic dynamic capacity (C) in KN	15.99	31.39

Explain how the bearing is designated and what NU2205 bearing means. **[12]**

b) Explain with the help of curve McKee's investigation to correlate between bearing characteristic number and coefficient of friction. **[6]**

Q3) a) A Single block brake with a braking torque capacity of 225 N-m is shown in following figure. The brake drum rotates at 500 rpm and coefficient of friction between the brake drum and the block is 0.5 N/mm^2. Calculate. **[12]**

i) The actuating force and the hinge - pin reaction for clockwise rotation of the drum.

ii) The actuating force and the hinge - pin reaction for anti-clockwise rotation of the drum.

iii) The dimensions of the block.

iv) The dimension "C" required for the brake to be self locking and

v) The rate of heat generation at the beginning of braking.

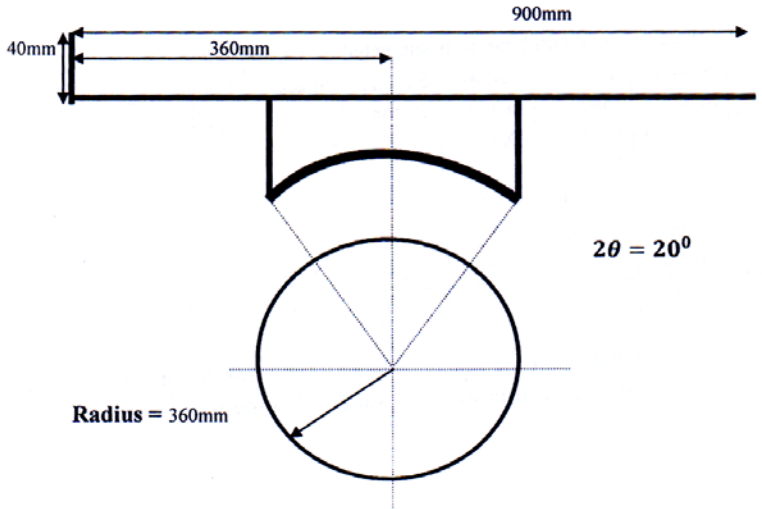

b) Explain with the help of neat sketch construction and working of internal expanding brakes. **[5]**

OR

Q4) a) Derive the expression for torque transmission capacity of cone clutch using uniform pressure theory and uniform wear theory. **[5]**

b) A cone clutch connects an electric motor running at 1440 r.p.m. with a machine which is stationary. The machine is equivalent to a rotor of mass 250 kg and a radius of gyration 300 mm. The machine has to be brought to full speed of 1440 rpm from a stationary condition within 40 seconds. The semi-cone angle is 12.5°. The mean radius of the friction is twice the face width. The coefficient of friction is 0.2, while the intensity of pressure is limited to 0.1 N/mm^2. Assuming the uniform wear condition, Determine : **[12]**

i) The dimensions of the friction surfaces.

ii) Axial force required to engage the clutch

iii) The amount of heat generated during the engagement.

Q5) a) A multi speed gear box is to be designed for a small-size, general purpose machine tool for spindle speeds varying between 56 r.p.m. minimum and 1000 r.p.m. maximum speeds. If the recommended geometric progression ratio is as per R4 series. The motor seed is 720 rpm. **[12]**

i) Draw the candidate structure diagrams for a machine tool gear box; and

ii) Select the optimum structure diagram using node method of optimization

iii) Draw optimum speed diagram

iv) Calculate speed if input shafts and ratio of pulley diameters

v) Draw kinematic (Gearing) diagram for a given gear box.

b) Explain in brief the condition of an optimum structure diagram should satisfy. **[6]**

OR

Q6) a) Draw speed ray diagram, layout for six speed gear box and calculate Input shaft speed for a multi speed gear box having any one of the following structural formula :

i) 2(3) 3(1) ii) 2(1) 3(2)

The output speeds are 160 r.p.m. minimum and 100 r.p.m. maximum speeds. The motor shaft speed is 1440 r.p.m. **[12]**

b) Draw the following candidate structural diagram : **[6]**

i) 2(1) 3(2) 2(6)

ii) 2(6) 3(1) 2(3)

iii) 2(2) 3(4) 2(1)

Q7) a) Discuss the following characteristics of hybrid electric vehicle components **[10]**

i) Traction force Vs Vehicle speed

ii) Battery power Vs Scale of Charge

b) Discuss power management in hybrid electric vehicle. **[7]**

OR

Q8) a) Explain with the help of neat sketch construction (layout), working, advantages and limitation of battery operated electric vehicle. **[10]**

b) Discuss Basic elements and working of Series hybrid vehicle. **[7]**

□□□

Total No. of Questions : 8]

SEAT No. :

P-6692

[Total No. of Pages : 3

[6181]-264

B.E. (Mechanical-Sandwich)

MACHINE DYNAMICS AND VIBRATION

(2019 Pattern) (Semester - VIII) (402067)

Time : 2½ Hours] ***[Max. Marks : 70***

Instructions to the candidates:

1) ***Answer Q1 or Q2, Q3 or Q4, Q5 or Q6 and Q7 or Q8.***
2) ***Draw Neat diagrams wherever necessary.***
3) ***Use of scientific calculator is allowed.***
4) ***Assume suitable data where ever necessary.***
5) ***Figures to the right indicate full marks.***

Q1) a) Describe the energy method to derive differential equation of motion for simple spring-mass system. **[6]**

b) A rod of uniform circular cross section having diameter 60 mm and length 100 cm is fixed at one end and oriented with axis in vertical direction. A disc of mass 420 kg and radius of gyration 220 mm is coaxially attached at the other end of the rod. Take modulus of elasticity and rigidity as 220 GPa and 80 GPa respectively. Find the natural frequencies of axial (longitudinal), transverse (lateral) and torsional vibrations in Hz. **[11]**

OR

Q2) a) Draw the neat labeled time-displacement graph for free vibration of Coulomb damped 1-dof system. Also state the expression for determining the loss of amplitude per cycle. **[6]**

b) In a damped free vibration system mass is 10 kg and spring stiffness is 1000 N/m. It is observed that initial amplitude of 100 mm is reduced to 1 mm in 4 oscillations. Find the damping coefficient, natural frequency and frequency of free vibration of the system. **[11]**

Q3) a) Explain with neat sketch the transient state and steady state of vibration related to forced vibration. **[6]**

P.T.O.

b) An electric motor of mass 50 kg produces a static deflection of 25 mm when it is supported on isolation mounts. The motor has rotating unbalance of 54 kg-mm. At a speed of 1300 rpm the motor vibrates in vertical direction with steady state amplitude of 1.1 mm. Calculate stiffness and damping coefficient of the mount. **[11]**

OR

Q4) a) What are frequency response curves? State any four observations from these plots drawn for different damping conditions. **[6]**

b) A rotor of 12 kg mass is mounted midway on a horizontal shaft of diameter 3 cm which is simply supported with a span of 1 m in bearings at both the ends. The center of gravity of the rotor is 0.5 mm offset from its axis of rotation. The modulus of elasticity of shaft material is 200 GPa. Determine- i) Static deflection of rotor ii) Critical speed of shaft in rpm iii) Amplitude of steady state lateral vibrations of rotor and iv) dynamic load on each bearing at a speed of 3000 rpm. **[11]**

Q5) a) Explain two degree of freedom system with any two practical examples.**[6]**

b) Two discs A and B of mass MI J_A = 2 kg-m^2 and J_B = 3 kg-m^2 are mounted on a shaft of torsional stiffness K_t = 100 N-m/rad as shown in the figure. The shaft can freely rotate in the end support bearings. i) Draw FBD of each disc and derive the differential equations of motion in terms of angular displacement θ_A and θ_B of the discs ii) Derive the frequency equation and find natural frequencies of the rotor iii) Find the mode shapes corresponding to each natural frequency and iv) describe mode shapes graphically. **[12]**

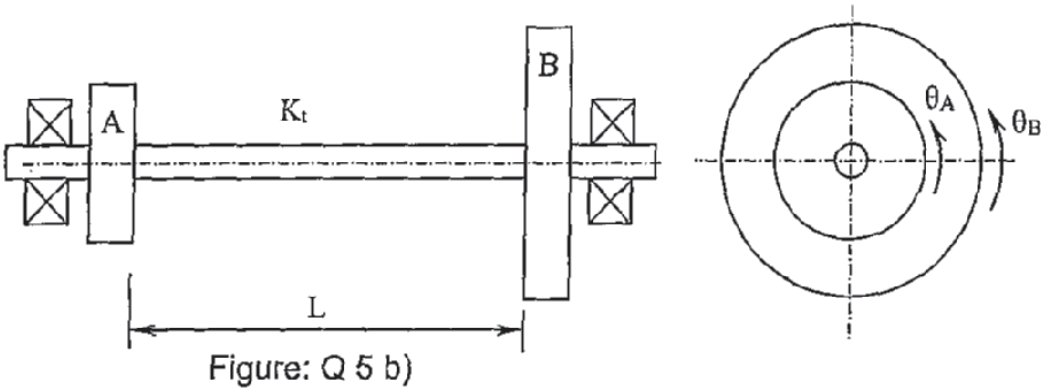

Figure: Q 5 b)

OR

Q6) a) Explain the significance of natural frequency and mode shape of a two degree of freedom system with suitable example. **[4]**

b) For the system of spring and masses shown in the figure, i) derive the differential equations of motion in terms of displacement x_1 and x_2 of masses ii) derive the frequency equation and find natural frequencies iii) find the mode shapes corresponding to each natural frequency and iv) describe the mode shapes graphically. **[14]**

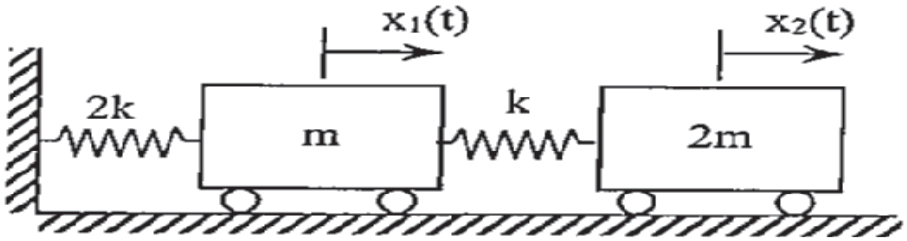

Figure : Q6 b)

Q7) a) Explain in brief various methods and techniques for vibration control. **[6]**

b) Explain with neat sketches the working principle of seismic sensor for vibration measurement. **[6]**

c) The static deflection of the vibrometer mass is 30 mm. The instrument when attached to machine vibrating with a frequency of 8 Hz, records the relative amplitude of 0.5 mm. Find the amplitude of displacement, velocity and acceleration of the machine vibration. **[6]**

OR

Q8) a) What are the different types of Vibration pickups? Explain any two in detail. **[6]**

b) What is Dynamic Vibration Absorber? Explain working principle of undamped dynamic vibration absorber. **[6]**

c) What are vibration exciters? Explain the types of mechanical vibration exciters. **[6]**

Total No. of Questions : 8]

SEAT No. : ____

P-6693

[Total No. of Pages : 2

[6181]-265
B.E. (Mechanical Sandwich)
ARTIFICIAL INTELLIGENCE IN MECHANICAL ENGINEERING
(2019 Pattern) (Semester - VIII) (402068)

Time : 2½ Hours] ***[Max. Marks : 70***

Instructions to the candidates :

1) ***Answer Q.1 or Q.2, Q.3 or Q.4, Q.5 or Q.6, Q.7 or Q.8.***
2) ***Neat diagrams must be drawn wherever necessary.***
3) ***Use of electronic calculator is allowed.***
4) ***Assume suitable data, if necessary.***

Q1) a) What is the difference between KNN and K means? Also state advantages and limitations of KNN and K means? **[6]**

b) Explain following terms in decision tree: **[6]**

i) Entropy

ii) Information gain

iii) Gini index

c) What is Support Vector Machine? How does the SVM work. **[5]**

OR

Q2) a) Enlist and explain steps involved in development of regression model. **[6]**

b) How does the Bayes algorithm differ from decision trees? **[6]**

c) What are the various applications of machine learning in mechanical engineering? **[5]**

Q3) a) Represent over-fitting, under-fitting and optimum fitting in classification problem pictorially. **[8]**

b) Calculate i) Accuracy ii) Precision iii) Recall iv) FlScore **[10]**

		Actual Values	
		1	0
Predicted Values	1	540	150
	0	110	200

OR

P.T.O.

Q4) a) State advantages and disadvantages of random forest **[8]**

b) Explain following terms **[10]**

i) ACCURACY

ii) PRECISION

iii) RECALL

iv) F1SCORE

Q5) a) What is the Bellman Equation? How is it helpful in RL? **[8]**

b) Explain types of reinforcement learning: (Positive & Negative reinforcement) **[10]**

OR

Q6) a) Explain elements of reinforcement learning. **[8]**

b) What is activation Functions? Explain any one in details. **[10]**

Q7) a) Write short note on use of AIML in Material inspection. **[9]**

b) What are the advantages of using Fault detection in Automobile cars. **[8]**

OR

Q8) a) State different applications of AIML in Health care. **[8]**

b) Explain in details different applications of AIML. **[9]**

Total No. of Questions : 8]

SEAT No. :

P-6694

[Total No. of Pages : 2

[6181]-266

B.E. (Mechanical Engineering) (Sandwich)

AUTOMOBILE ENGINEERING

(2019 Pattern) (Semester - VIII) (402069A) (Elective - I)

Time : 2½ Hours] *[Max. Marks : 70*

Instructions to the candidates:

1) ***Answer Q.1 or Q.2, Q.3 or Q.4, Q.5 or Q.6, Q.7 or Q.8.***
2) ***Neat diagrams must be drawn wherever necessary.***
3) ***Use of electronic calculator is allowed***
4) ***Assume suitable data, necessary***

Q1) a) Explain different types of braking system used in automobile. **[6]**

b) Describe requirements of good wheel. **[6]**

c) Explain Tyre specification used for LMV of your choice. **[5]**

OR

Q2) a) Explain functions of brake in an automobile. **[6]**

b) Explain with neat sketch construction of disc wheel. **[6]**

c) Describe various factors affecting performance of Tyre. **[5]**

Q3) a) Describe with suitable sketch. **[8]**

i) Charging circuit used in automobile.

ii) Construction and working of Horn.

b) Describe with neat sketch types of headlamps used in automobile. **[10]**

OR

Q4) a) Explain Charging circuit, starting system used in an automobile. **[8]**

b) Explain with neat sketch construction and working of lead acid battery. **[10]**

P.T.O.

Q5) a) Describe the working of a standard Bendix drive used in starter motors. **[8]**

b) Prepare schedule for daily, weekly and monthly maintenance of Car. **[10]**

OR

Q6) a) Explain various types of sensors used in automobile. Describe the role of each. **[8]**

b) Write a short note on the following. **[10]**

i) Catalytic converter

ii) Bharat stage norms

Q7) a) Describe in detail the following engine management system. **[9]**

i) Exhaust emission control

ii) Complete vehicle control

b) Describe with neat sketch architecture of series and parallel hybrid electric drive. **[8]**

OR

Q8) a) Explain layout and various components used in electric vehicle. **[8]**

b) Write note on safety and challenges in electric vehicles. **[9]**

Total No. of Questions : 8]

SEAT No. :

P-6695

[Total No. of Pages : 2

[6181]-267

B.E. (Mechanical Sandwich)

REFRIGERATION AND AIR CONDITIONING

(2019 Pattern) (Semester - VIII) (402069 B) (Elective - I)

Time : 2½ Hours] ***[Max. Marks : 70***

Instructions to the candidates :

1) ***Answer Q.1 or Q.2, Q.3 or Q.4, Q.5 or Q.6, Q.7 or Q.8.***
2) ***Neat diagrams must be drawn wherever necessary.***
3) ***Figures to the right indicate full marks.***
4) ***Assume suitable data if necessary.***

Q1) a) What is necessity of Multi Stage system? & List its Advantages and Disadvantages. **[9]**

b) Explain with neat sketch a VCRS with having individual compressor with compound compression and flash intercooling. **[9]**

OR

Q2) a) Why flash gas intercooling is used in multi pressure system? Explain with neat sketch. **[9]**

b) Draw and Explain any one cascade refrigeration system with Ph diagram. **[9]**

Q3) a) How By-pass factor for heating and cooling coils is calculated? **[9]**

b) Explain Enthalpy of moist Air and write its equation. **[8]**

OR

Q4) a) What are psychrometric processes? Show all psychrometric processes on psychrometric chart. **[9]**

b) Define following terms i) BPF ii) SHF iii) RSHF iv) ADP. **[8]**

P.T.O.

Q5) a) Draw neat sketch of Window air conditioning system and Explain its working. **[9]**

b) Explain with neat sketch i) dry expansion evaporator & ii) Flooded type evaporator. **[8]**

OR

Q6) a) Draw neat sketch of split type air conditioning system and Explain its working. **[9]**

b) Enumerate the functional elements of a Control unit. **[8]**

Q7) a) Explain Static and Velocity pressure in the duct with neat sketch. **[9]**

b) Explain Velocity reduction method of duct design. **[9]**

OR

Q8) a) Explain various pressure losses in the duct with neat sketch. **[9]**

b) Explain Equal friction method of duct design. **[9]**

▽▽▽▽

Total No. of Questions : 8]

SEAT No. :

P-6696

[Total No. of Pages : 2

[6181]-268

B.E. (Mechanical Engineering) (Sandwich)

FLUID POWER CONTROL

(2019 Pattern) (Semester - VIII) (402069C) (Elective - I)

Time : 2½ Hours] ***[Max. Marks : 70***

Instructions to the candidates :

1) ***Answer Q.1 or Q.2, Q.3 or Q.4, Q.5 or Q.6, Q. 7 or Q.8.***
2) ***Neat diagrams must be drawn wherever necessary.***
3) ***Use of electronic calculator is allowed.***
4) ***Assume suitable data, if necessary.***

Q1) a) What is the basic function of a hydraulic relief valve? How does it operate? **[8]**

b) What is a pressure compensated, hydraulic flow control valve? Where is it used? **[9]**

OR

Q2) a) What is the difference between a direct acting and a direct operated pilot type sequence valve. **[8]**

b) What is a four way, three position open center hydraulic control valve? Explain its application. **[9]**

Q3) a) Name some applications where it would be desirable to have two cylinders synchronized in movement. **[8]**

b) Design a circuit to show how two sequence valves can be used in conjunction with a four-way control valve to operate two cylinders in sequence. **[10]**

OR

Q4) a) What are the advantages of a high-low pump circuit? **[8]**

b) Draw and Explain speed control hydraulic circuits. With applications. **[10]**

P.T.O.

Q5) a) What are the advantages and disadvantages of a unit which contains a regulator, filter and a lubricator built into one housing. **[8]**

b) Name three types of pneumatic directional control valves and give an example of an application for each. **[10]**

OR

Q6) a) What is the importance of an air muffler? Where should they be applied? **[8]**

b) Why is it necessary to keep compressed air clean, lubricated and free of water? **[10]**

Q7) a) Make a circuit drawing showing the use of a rotary hydraulic actuator which is controlled by a four way, three position, closed center hydraulic control valve and two flow control valves. **[8]**

b) What are some of the parameters that must be considered when designing a high-pressure hydraulic system? **[9]**

OR

Q8) a) Make a circuit showing the use of two pilot operated, two position, four-way control valves to actuate two pneumatic cylinders in sequence. Explain the operation. **[8]**

b) Draw a pneumatic circuit which will provide a safety stop if an overload occurs. **[9]**



Total No. of Questions : 8]

SEAT No. :

P-8685

[Total No. of Pages : 2

[6181]-269

B.E. (Mechanical Engineering) (Sandwich)

ADDITIVE MANUFACTURING

(2019 Pattern) (Semester - VIII) (402045C) (Elective - I)

Time : 2½ Hours] ***[Max. Marks : 70***

Instructions to the candidates :

1) ***Answer Q1 or Q2, Q3 or Q4, Q5 or Q6, Q7 or Q8.***
2) ***Neat diagrams must be drawn wherever necessary.***
3) ***Figures to the right indicate full marks.***
4) ***Assume suitable data, if necessary.***

Q1) a) Explain the working principle of fused deposition modelling with neat sketch. Discuss the possible defects in this method. **[9]**

b) Explain the printing mechanism involved in direct ink writing with neat sketch. Give their advantages and applications. **[9]**

OR

Q2) a) Explain Direct metal deposition. List its Benefits and Limitations. **[9]**

b) Explain the process polyjet printing. Also write the applications, merits and demerits. **[9]**

Q3) a) Explain the post processing steps involved in powder based additive manufacturing. **[9]**

b) Explain with an example how the material and the additive manufacturing method can be selected for various applications. **[8]**

OR

Q4) a) Discuss the various techniques used to enhance the surface properties of additively manufactured parts. **[8]**

b) Explain the various design considerations/rules involved in additive manufacturing with the help suitable sketch. **[9]**

P.T.O.

Q5) a) Define slicing and their types. Explain the various infill strategies used for area filling the sliced model. **[9]**

b) Explain the construction details of 3D printers. **[9]**

OR

Q6) a) Explain the construction of 3D printers. List their advantages and applications. **[9]**

b) Explain the steps followed while slicing a CAD model in slicing software Explain the construction of extrusion based printers. **[9]**

Q7) a) Discuss the benefits of additive manufacturing in the research and development sector. **[9]**

b) Discuss a case study on how the performance of automobile parts can be improved by adopting additive manufacturing. **[8]**

OR

Q8) a) How additive manufacturing can influence the mass customization? Explain in detail mentioning its future trends. **[9]**

b) Discuss the application of 3D printing in art. fashion and Jewellery industry. **[8]**



Total No. of Questions : 8]

SEAT No. : ____

P-6697

[Total No. of Pages : 2

[6181]-270

B.E. (Mechanical) (Sandwich)

AUTOMATION AND ROBOTICS

(2019 Pattern) (Semester - VIII) (402051C) (Elective - I)

Time : 2½ Hours] ***[Max. Marks : 70***

Instructions to the candidates:

1) ***Solve Q1 or Q2, Q3 or Q4, Q5 or Q6, Q7 or Q8.***
2) ***Neat diagrams must be drawn wherever necessary.***
3) ***Figures to the right side indicate full marks.***
4) ***Use of Calculator is allowed.***
5) ***Assume Suitable data if necessary.***

Q1) a) Explain A.C. Servo Motors with neat sketch. **[7]**

b) Write the different between Mechanical Drives and Electrical Drives. **[5]**

c) Explain any two Micro actuators. **[6]**

OR

Q2) a) Explain Motion Transmission Systems for Robot. **[6]**

b) What is Planetary Gearbox and How Does it Works? **[8]**

c) State the application of Pneumatic Drives **[4]**

Q3) a) What are Design Considerations of End-Effectors. **[8]**

b) Explain Machine Vision System used in Robotic Applications. **[6]**

c) Give the Classification of Sensors. **[3]**

OR

Q4) a) Discuss various type of grippers used in robotics. **[6]**

b) Explain the working of Encoder with neat sketch. **[6]**

c) Write the Difference Between Active and Passive Compliance. **[5]**

P.T.O.

Q5) a) Explain basic Homogenous Transformations. **[6]**

b) A moving frame {U V W} and fixed frame {X Y Z} are initially coincident, then moving frame {U V W} rotate 90 degree about Z axis and then followed by a rotation 90 degree X axis. Then {U V W} locates the points P, at U =20 V = 30 W=40. Determine its coordinates with respect to {XYZ}. **[7]**

c) Write notes on: Recursive Forward Dynamics Algorithm. **[4]**

OR

Q6) a) Derive an equation of motion for serial manipulators using Lagrangian formulation. **[6]**

b) Explain different type of joint use in robots. **[4]**

c) With the help of suitable illustration explain the significance of D-H parameters. **[7]**

Q7) a) Explain Robot Cell Design Considerations and Selection of Robot. **[8]**

b) Write a short notes on : **[10]**

i) Unmanned Aerial Vehicle (UAV)

ii) Mobile Robots

OR

Q8) a) Write the different between Simulation and Off-line Programming. **[6]**

b) Write a any three Applications of Robots in Non-manufacturing filed. **[12]**

Total No. of Questions : 8]

SEAT No. :

P-6698

[Total No. of Pages : 2

[6181]-271

B.E. (Mechanical Engineering) (Sandwich)

PRODUCT DESIGN AND DEVELOPMENT

(2019 Pattern) (Semester - VIII) (402045A) (Elective-II)

Time : 2½ Hours] ***[Max. Marks : 70***

Instructions to the candidates :

1) ***Solve Q.1 or Q.2, Q.3 or Q.4, Q.5 or Q.6, Q.7 or Q.8.***
2) ***Neat diagrams must be drawn wherever necessary.***
3) ***Figures to the right indicate full marks.***
4) ***Use of an electronic pocket calculator is allowed.***
5) ***Assume suitable data, if necessary.***

Q1) a) Describe in detail TRIZ Methodology. **[9]**

b) List down different methods used for product teardown process and explain any two. **[9]**

OR

Q2) a) What is the process of new product concept generation and why is it important for businesses? **[10]**

b) Explain the process of functional modelling and decomposition. **[8]**

Q3) a) Write a note on FAST method. **[8]**

b) What is Limits, Fits and Tolerances? Describe and explain their types. **[9]**

OR

Q4) a) What is Ergonomics in design? Explain types of ergonomics with example. **[9]**

b) What is design for safety? Explain the principles of Safety with example. **[8]**

P.T.O.

Q5) a) Explain stereolithography in detail with suitable sketch. **[10]**

b) What is the necessity of economic analysis of product? Elaborate. **[8]**

OR

Q6) a) What is production capacity planning? Explain the steps followed in planning. **[10]**

b) List down different methods of economic analysis of product and explain break even analysis. **[8]**

Q7) a) List down types of FMEA and Explain any one with example. **[8]**

b) Explain PFMEA. **[9]**

OR

Q8) a) What is PLM? Discuss the elements of PLM in detail. **[9]**

b) Discuss the guidelines for design for robustness. **[8]**



Total No. of Questions : 8]

SEAT No. :

P8650

[Total No. of Pages : 6

[6181] - 272

B.E. (Mechanical Sandwich)
OPERATION RESEARCH
(2019 Pattern) (Semester - VIII) (402045-D) (Elective - II)

Time : 2 ½ Hours] ***[Max. Marks : 70***

Instructions to the candidates:

1) ***Answer Q1. or Q2, Q3. or Q4, Q5. or Q6, Q7. or Q8.***
2) ***Answer in One answer Books.***
3) ***Figures to the right indicate full marks.***
4) ***Assume suitable data, if necessary.***

Q1) a) Use Simplex method to solve the following LPP. **[10]**

Maximize $Z = 2X_1 + X_2$

Subject to Constraints

$$4X_1 + 3X_2 \leq 12;$$
$$4X_1 + X_2 \leq 8;$$
$$4X_1 - X_2 \leq 8;$$
$$X_1, X_2 \geq 0;$$

b) Discuss the following terms related to LPP. **[7]**

i) Objective function
ii) Constraint surface
iii) Feasible and infeasible points
iv) Optimum solution

OR

Q2) a) Use Graphical method to solve the following LPP **[10]**

Minimize $Z = 10\ X_1 + 4X_2$

Subject to Constraints

$$3X_1 + 2X_2 \geq 60;$$
$$7X_1 + 2X_2 \geq 84;$$
$$3X_1 + 6X_2 \geq 72;$$
$$X_1, X_2 \geq 0$$

P.T.O.

b) Explain the importance of LPP in Engineering Application. How this is used for the optimization. **[7]**

Q3) a) Discuss the following related to the transportation model. **[8]**

i) Feasible solution

ii) Optimum Solution

iii) Non-degenerate Basic feasible Solution

iv) Degenerate basic Feasible Solution

b) Fine out the initial feasible solution by Vogel's Approximation Method (VAM). **[10]**

		Stores				Availability
		I	II	III	IV	
	A	21	16	15	13	11
Warehouse	B	17	18	14	23	13
	C	32	27	18	41	19
Requirement		6	10	12	15	

OR

Q4) a) An airline company has drawn up a new flight schedule that involves five flights. To assist in allocating five pilot to the five flights, it has asked them to slate their preference scores by giving each flight a number out of 10. The higher the number, the greater is the preference. A few of these flights are unsuitable to some pilots, owing to domestic reasons. These have been marked with "X". **[12]**

		Flight Number				
		I	II	III	IV	V
	A	8	2	X	5	4
Pilot	B	10	9	2	8	4
	C	5	4	9	6	X
	D	3	6	2	8	7
	E	5	6	10	4	3

What should be the allocation of the pilots in order to meet maximum preference?

b) Explain the significance and applications of assignment and transportation problem. **[6]**

Q5) a) A bank has decided to modernize its office. The major elements of the project are as follows. **[12]**

Activity	Description	Predecessor Activity	Duration (Days)
A	Design New premises	---	14
B	Obtain tenders from contractors	A	4
C	Select the contractor	B	2
D	Arrange details with selected contractot	C	1
E	Decide which equipment is to be used	A	2
F	Arrange storage of equipment	E	3
G	Arrange disposal of other equipment	E	2
H	order new equipment	E	4
I	Take delivery of new equipment	H,L	3
J	Renovations take place	K	12
K	Remove old equipment for storage or disposal	D,F,G	4
L	Cleaning after the contractor finished	J	2
M	Return old equipment for storage	H,L	2

i) Draw an arrow diagram for this project.

ii) Find out the critical path

iii) For each non-critical activity find out the total, free and independent float or Slacks.

b) Explain in brief Following (Any 3). **[6]**

i) Gradual failure

ii) Sudden failure

iii) Progressive failure

iv) Retrogressive failure

v) Random failure

OR

Q6) a) A truck owner finds from his past records that the maintenance cost per year of a truck whose purchase price is Rs. 8,000 are as follows : **[10]**

Year	1	2	3	4	5	6	7	8
Maintenance Cost(Rs)	1000	1300	1700	2000	2900	3800	4800	6000
Resale price (Rs)	4000	2000	1200	600	500	400	400	400

Determine at which time it is profitable to replace the truck

b) Differentiate between CPM and PERT and also discuss various floats involved in the in CPM analysis of network. **[8]**

Q7) a) A company has five salesmen who have to be allocated to four marketing zones. The return (profit) from each zone depends upon the numbers of salesman working in that zone. The expected return for different numbers of salesman in different zones, as estimated from the past record, are given in the following table. Determine the optimum allocation policy. (Use DP). **[12]**

Number of salesman	Marketing Zones		
	Zone 1	Zone 2	Zone 3
0	30	35	42
1	45	45	54
2	60	52	60
3	70	64	70
4	79	72	82
5	90	82	95
6	98	93	102
7	105	98	110
8	100	100	110
9	90	100	110

b) Write short note on Monto Carlo Simulation. **[5]**

OR

Q8) a) A salesman located in a city A decided to travel to city B. He knew the distances of alternative routes from city A to city B. He then drew a highway network map as shown in following figure. The city of origin A. is city 1. The destination city B is city 10. Other cities through which the salesman will have to pass throuah are numbered 2 to 9. The arrow representing routes between cities and distances in kilometres are located on each route. The salesman problem is to find the shortest route that covers all the selected cities from A to B. The time for each activity is given in the table. (Solve by using Dynanhic programming). **[12]**

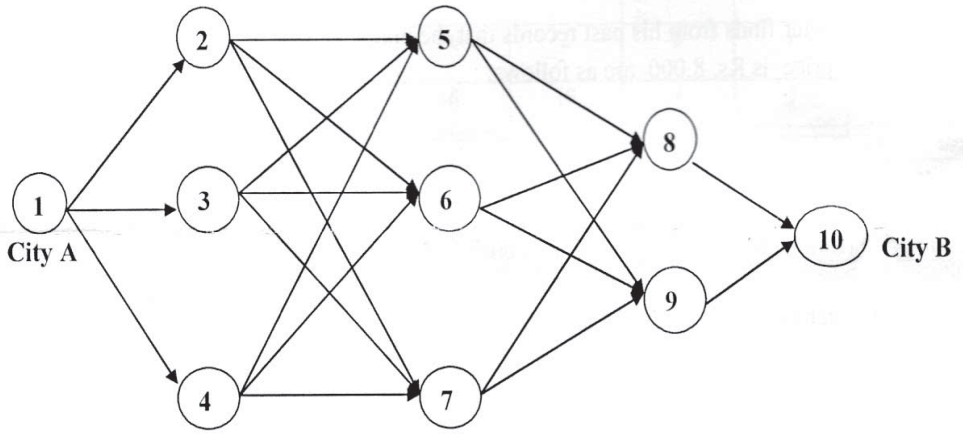

Activity	Duration	Activity	Duration
1-2	4	4-5	6
1-3	6	4-6	10
1-4	3	4-7	5
2-5	7	5-8	4
2-6	10	5-9	8
2-7	5	6-8	3
3-5	3	6-9	7
3-6	8	7-8	8
3-7	4	7-9	4
		8-10	7
		9-10	9

b) Explain in brief various steps involved in the simulation. **[5]**

❄ ❄ ❄

Total No. of Questions : 8]

SEAT No. :

P-6699

[Total No. of Pages : 2

[6181]-273

B.E. (Mechanical Sandwich)

ELECTRICAL AND HYBRID VEHICLE

(2019 Pattern) (Semester - VIII) (402051E) (Elective - II)

Time : 2½ Hours] ***[Max. Marks : 70***

Instructions to the candidates:

1) ***Answer Four questions front the following.***
2) ***Draw neat labeled diagrams wherever necessary.***
3) ***Figures to the right side indicate full marks.***
4) ***Use of non-programmable electronic calculator is permitted.***
5) ***Assume Suitable/Standard data if necessary.***

Q1) a) Describe and Illustrate the Energy Storage System Types and Packs Classification. **[8]**

b) Explain the Application of three types of Motors and their Design with Examples. **[9]**

OR

Q2) a) Find out battery rating considering the given data : **[8]**

Speed = 25Km/hr max, Motor rating = 250 Watts, 24Volts, Motor efficiency = 85%, to cover distance of 100km. Assume suitable data, if necessary.

b) Short note on Battery thermal management system (cooling, thermal protection control, safety and maintenance). **[9]**

Q3) a) Explain and illustrate Fuel Efficiency Analysis. **[8]**

b) Explain the Power train Components and Sizing Calculation. **[9]**

OR

Q4) a) Describe and Illustrate the Brake System and its types. **[8]**

b) Describe and Illustrate the General description of vehicle movement. **[9]**

P.T.O.

Q5) a) Describe and illustrate the body loads based on varieties of Electric Vehicle Configurations. **[9]**

b) What is the Homologation of Vehicles? **[9]**

OR

Q6) a) What is Retrofitting? Describe and illustrate the retrofitting of Two-wheeler vehicles. **[9]**

b) Explain Need of vehicle Testing. What are the National/International Testing/ Regulation/Licensing/Approval Organizations and Agencies? **[9]**

Q7) a) What are the Requirements for Charging System? **[9]**

b) Write detail note on end of life management of EVs and their batteries. **[9]**

OR

Q8) a) Write a note on : **[9]**

i) AIS Charging Standards,

ii) BIS Charging Standards,

iii) Charging Infrastructure for Electric Vehicles -EVCI Guidelines.

b) Write detail note on end of life management of EVs and their batteries. **[9]**

Total No. of Questions : 8]

SEAT No. : ____

P-7856

[Total No. of Pages : 4

[6181]-274

B.E. (Mechanical - Sandwich)

QUALITY & RELIABILITY ENGINEERING

(2019 Pattern) (Semester-VIII) (402050A) (Elective-II)

Time : 2½ Hours] ***[Max. Marks : 70***

Instructions to the candidates :

1) ***Neat diagrams must be drawn wherever necessary.***
2) ***Figures to the right indicate full marks.***
3) ***Assume Suitable data if necessary and mention it clearly.***
4) ***All questions are compulsory i.e. Solve Q.1 or Q.2, Q.3 or Q.4, Q.5 or Q.6, Q.7 or Q.8.***

Q1) a) Draw a 'Bath Tube Curve' and explain the following regions in it i) Infant Mortality ii) Normal operation period, iii) Wear out period. **[8]**

b) Following table shows the test results for 1000 components tested simultaneously. **[9]**

Time (hrs)	0	100	200	300	400	500	600	700	800	900	1000
No.of Surviving components	1000	895	810	730	660	600	545	495	450	410	373

Evaluate: Hazard rate, Failure density function, reliability and plot these functions against time.

OR

Q2) a) Define i) Reliability, ii) Hazard rate, iii) Failure density function, and iv) MTBF. **[8]**

b) Following table shows the results for 100 components tested simultaneously, Evaluate: [9]

Hazard rate, failure density function & Reliability.

Time (hrs.)	0	10	20	30	40	50	60	70	80	90	100
No. of Surviving components	100	90	81	73	66	60	55	50	45	41	37

P.T.O.

Q3) a) Consider a system composed of three subsystems with estimated failure rates of $\lambda_1 = 0.005$, $\lambda_2 = 0.003$ and $\lambda_3 = 0.001$ failure per hour respectively. The system has a mission time of 20 hours. A system reliability of 0.98 is required. Find the reliability requirements for the subsystems. **[8]**

b) Calculate the reliability of the system shown in following Fig. below. The values shows the reliability of individual components in the system. **[10]**

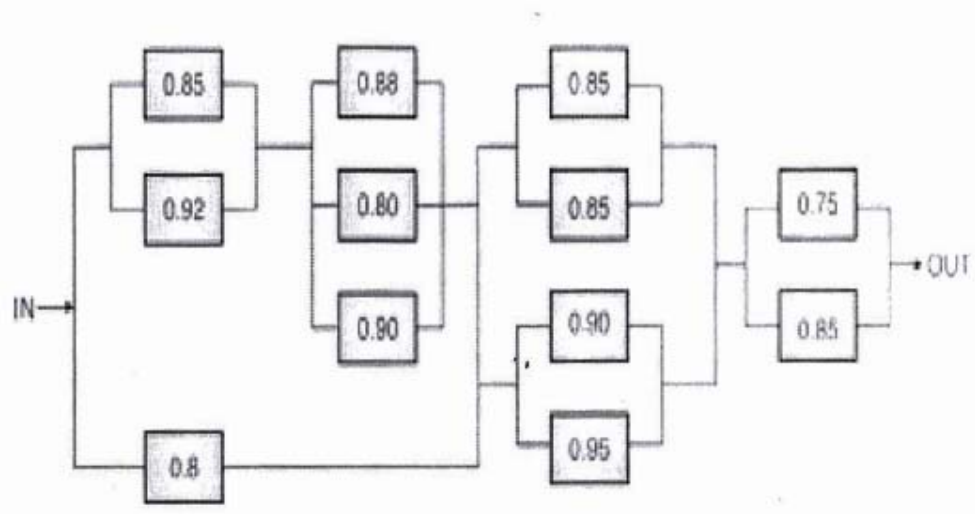

OR

Q4) a) Explain with illustration reliability analysis of series, parallel & mixed configuration systems. **[8]**

b) Evaluate reliability of the system using cut set-Tie set method and draw equivalent block diagram for minimal cut set and tie set. If all components are identical and independent with reliability 0.8, determine the system reliability. **[10]**

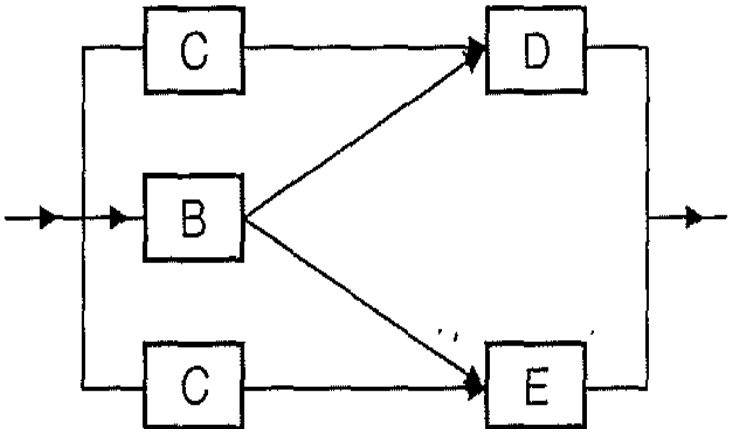

Q5) a) What is FFMEA? Discuss the method of obtaining criticality of a component or a subsystem using Risk Priority Number (RPN). **[8]**

b) A room with two light hulbs is operated by a single switch. By assuming the 'No light in the room as the top undesirable event construct the fault tree diagram. **[9]**

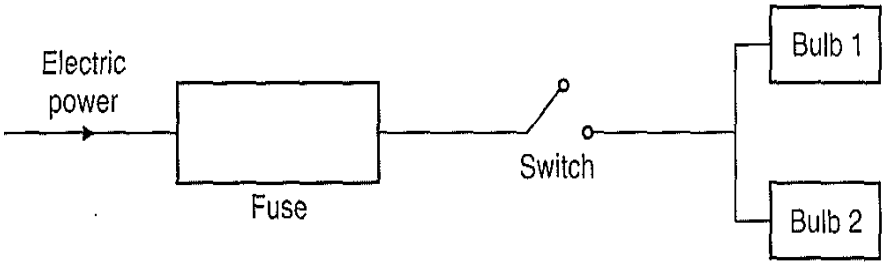

OR

Q6) a) What is fault tree analysis (FTA)? Give four basic symbols used in FTA.**[8]**

b) A SPM (Special purpose machine) requires a continuous DC supply during operation. A required DC supply is made available through AC to DC converters. Two converters are used in order to ensure uninterrupted DC supply. Converters receive power supply from sub-station which is directly connected to the main supply line. Construct the fault tree for the system. **[9]**

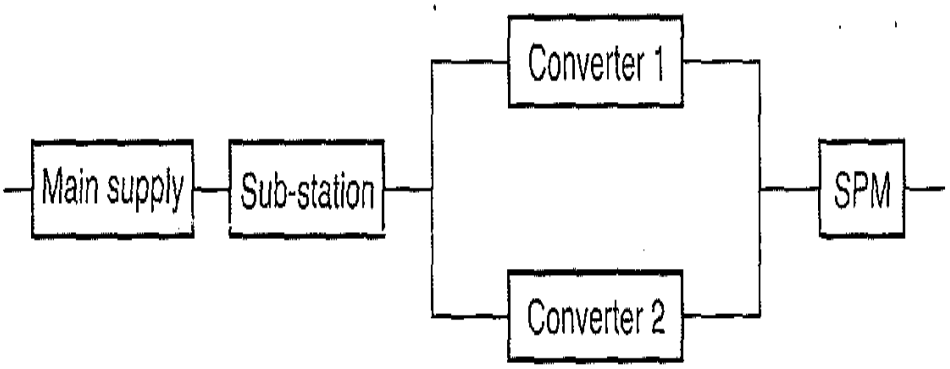

Q7) a) In a short sample "accelerated life testing" of a system based on Weibull distribution the following data is recorded. **[8]**

Failure No.	1	2	3	4	5	6	7	8	9
MTTF(hrs.)	24	22	12	28	35	38	30	19	25

Plot the variation of reliability against time using:

(i) Mean ranking and (ii) Median ranking method.

b) Define "Safety Margin" arising out of Load-strength interaction. Compare it with "Factor of Safety". **[5]**

c) Explain the causes of failures of engineering components and systems. **[5]**

OR

Q8) Write a note on

a) Highly accelerated life testing **[6]**

b) Reliability centered maintenance **[6]**

c) Maintainability **[6]**



Total No. of Questions : 8]

SEAT No. :

P-6700

[Total No. of Pages : 2

[6181]-275

B.E. (Mechanical S/W)

INTERNET OF THINGS

(2019 Pattern) (Semester - VIII) (402044 E) (Elective - II)

Time : 2½ Hours] *[Max. Marks : 70*

Instructions to the candidates:

1) ***Solve Q.1 or Q.2, Q.3 or Q.4, Q.5 or Q.6, Q.7 or Q.8.***
2) ***Neat diagrams must be drawn wherever necessary.***
3) ***Figures to the right side indicate full marks.***
4) ***Use of Calculator is allowed.***
5) ***Assume Suitable data if necessary.***

Q1) a) Explain the Motion Sensor interfacing with any board. **[7]**

b) How to simulate an loT environment? **[7]**

c) Explain any one loT Network Devices. **[4]**

OR

Q2) a) List and explain the libraries of Arduino or Raspberry Pi. **[10]**

b) Describe IoT architecture outline. **[8]**

Q3) a) Explain Radio-Frequency identification (RFID) Communication. **[7]**

b) What are the popular communication technologies? Explain any four. **[10]**

OR

Q4) a) Enumerate basic and advanced features of loT Platforms. **[8]**

b) Compare Physical Vs Cloud Servers used in communication. **[9]**

Q5) a) Explain Real Time Location Sensing (RTLS) communication. **[9]**

b) Compare Message Queueing Telemetry (MQTT) protocol with Hyper Text Transport Protocol (HTTP). **[8]**

OR

P.T.O.

Q6) a) Expalin SQL Back-end Application. **[8]**

b) What are the Security issues to be addressed during development of IoT? **[9]**

Q7) a) Explain IoT Applications for Connected Vehicles and Business. **[10]**

b) What are the legal challenges in implementing IoT applications? **[8]**

OR

Q8) a) Explain Data Aggregation for the IoT in Smart Cities. **[10]**

b) Explain the Need of powerful core for building secure algorithms. **[8]**

⌘⌘⌘

Total No. of Questions : 8]

SEAT No. :

P6701

[Total No. of Pages : 2

[6181]-281

B.E. (Printing Engineering)

GRAVURE PRINTING TECHNIQUES

(2019 Pattern) (Semester - VII) (408283)

Time : 2½ Hours] *[Max. Marks : 70*

Instructions to the candidates:

1) ***Attempt Q.No.1 or Q.No.2, Q.No.3 or Q.No. 4, Q.No.5 or Q.No.6, Q.No.7 or Q.No.8.***
2) ***Figures to the right side indicate full marks.***
3) ***Assume suitable data, if necessary.***
4) ***Neat diagrams must be drawn wherever necessary.***

Q1) a) Explain gravure process in detail with diagram. **[8]**

b) Define Sheet-fed Gravure. **[5]**

c) Define ink transfer in Sheet fed gravure. **[4]**

OR

Q2) a) Describe different types of inks and solvents used for gravure. **[12]**

b) Explain compatibility of Resin with solvents. **[5]**

Q3) a) What is Viscosity and how to affect print quality? **[5]**

b) Define dryer and its types. Need of Dryers used on a gravure press. **[12]**

OR

Q4) a) Explain Flammability of solvents. **[12]**

b) Define OSHA (Occupational Safety and Health Association) Standards. **[5]**

Q5) a) What is Impression Cylinder and affect print quality due to pressure. **[8]**

b) Explain specifications for impression rollers. **[5]**

c) Effect of ESA parameters on ink transfer. **[5]**

OR

Q6) a) Explain ESA and Effect of ESA on print quality. **[13]**

b) Describe effect of ESA parameters on ink transfer. **[5]**

P.T.O.

Q7) Write a note on:

a) Web Viewing System **[6]**

b) Web aligner **[6]**

c) Mounting Techniques of Web Aligner system **[6]**

OR

Q8) Write a note on:

a) 3” and 6” air expandable shafts. **[6]**

b) Electronic line shaft. **[6]**

c) Gravure Troubleshooting. **[6]**



Total No. of Questions : 8]

SEAT No. : [ ]

P6702

[Total No. of Pages : 2

[6181]-282

B.E. (Printing Technology)
DIGITAL PRINTING TECHNIQUES
(2019 Pattern) (Semester-VII) (408284)

Time : 2½ Hours] ***[Max. Marks : 70***

Instructions to the candidates:

1) ***Attempt Q.No.1 or Q.No.2, Q.No.3 or Q.No.4, Q.No.5 or Q.No.6, Q,No. 7 or Q.No.8.***
2) ***Figures to the right indicate full marks.***
3) ***Assume suitable data, if necessary.***
4) ***Neat diagrams must be drawn wherever necessary.***

Q1) a) What are the fundamental steps in Digital Image Processing. **[10]**

b) What are the functions of digital image processing. **[8]**

OR

Q2) a) Explain scientific proof method with process control parameters. **[10]**

b) Explain Electro photography proofing. **[8]**

Q3) a) Explain various attributes of Digital Camera-Dynamic Range, White Balance, Black Point. White Point. **[10]**

b) Explain 3 main attributes of Digital Camera-Shutter Speed, ISO and Aperture. **[7]**

OR

Q4) a) Explain Barcode and QR code scanning techniques. **[10]**

b) Explain the concept of Input resolution. **[7]**

Q5) Explain Lossy and lossless file formats. And compare the same. **[18]**

OR

Q6) Explain analog to digital conversion techniques and vice versa. **[18]**

P.T.O.

Q7) a) Explain job flow of visiting cards using variable data printing. **[10]**

b) Explain any 2 inline finishing operations. **[7]**

OR

Q8) a) Explain the concept of Automation in Print industry and necessity of a software based ERP system. **[10]**

b) Explain print on Demand with diagram. **[7]**

Authority's	Name	Sign
Paper Setter	Prof. Shrikala Kanade	
Head of Department	Prof. Madhura Mahajan	
Exam Department		

● ● ●

Total No. of Questions : 8]

SEAT No. :

P6703

[Total No. of Pages : 2

[6181] - 283

B.E. (Printing Technology)

PAPER BOARD AND CORRUGATION PACKAGE TECHNOLOGY

(2019 Pattern) (Semester - VII) (408281 A) (Elective - III)

Time : 2 ½ Hours] ***[Max. Marks : 70***

Instructions to the candidates:

1) ***Attempt Q.1 or Q.2, Q.3 or Q.4, Q.5 or Q.6, Q.7 or Q8.***
2) ***Figures to the right indicate full marks.***
3) ***Assume suitable data if necessary.***
4) ***Neat diagrams must be drawn wherever necessary.***

Q1) a) Explain in detail the process of manufacturing composite cans along with its applications. **[10]**

b) Explain "Stretch sleeve labels" with applications and diagram. **[7]**

OR

Q2) a) Explain in detail the process of manufacturing liquid filled cartons along with its applications. **[10]**

b) Explain "Wrap around labels" with applications and diagram. **[7]**

Q3) Explain in detail the manufacturing of punching die with complete automated system along with neat diagrams. **[18]**

OR

Q4) a) Explain the use of corking in die making along with neat diagram. **[9]**

b) Draw a neat diagram of RSC and label all the parts. Also explain the application of each part in brief. **[9]**

P.T.O.

Q5) Explain in detail the manufacturing of double wall corrugation board along with neat diagram of machine. **[17]**

OR

Q6) a) Explain various types of flutes used in corrugation industry along with their technical specifications and applications. **[10]**

b) Draw a diagram of single facer corrugated board, label the diagram and explain the applications of the same. **[7]**

Q7) Explain the FCT in detail along with diagram and its application. **[18]**

OR

Q8) a) Write a short note on ECT. **[9]**

b) Write a short note on RCT. **[9]**

❄ ❄ ❄

Total No. of Questions : 8]

SEAT No. :

P7841

[Total No. of Pages : 2

[6181]-284

B.E. (Printing Engineering)

POLYMER SCIENCE

(2019 Pattern) (Semester-VII) (408281 B) (Elective-III)

Time : 2½ Hours] *[Max. Marks : 70*

Instructions to the candidates:

1) ***Solve Q1 or Q2, Q3 or Q4, Q5 or Q6, Q7 or Q8.***
2) ***Figures to the right indicate full marks.***

Q1) a) Briefly explain the heat capacity of a material. **[6]**

b) What is heat of fusion? Briefly explain about heat of fusion in amorphous polymers. **[6]**

c) What is thermal expansion coefficient? What is the reason for higher thermal coefficient in polymers than metals? **[6]**

OR

Q2) a) What is impact strength of a material? How is it measured? **[6]**

b) What is blocking of polymer thin films? How is it controlled? **[6]**

c) Explain in brief the scratch adhesion test and the tape adhesion test. **[6]**

Q3) a) Briefly explain the dispersive and distributive mixing of additives. **[6]**

b) What is the function of UV stabilizers in a polymer. **[6]**

c) What is the role of lubricants in the production of polymers. **[5]**

OR

Q4) a) What is role of fillers in polymeric materials? Give any two examples for fillers. **[6]**

b) What are the factors which affect additive solubility? **[6]**

c) What are nucleating agents? Give examples. **[5]**

P.T.O.

Q5) a) Explain in detail the fluorination, Bromination, chlorination and sulfonation chemical modification for surface of polymers. **[12]**

b) Explain in brief about the crosslinking of polymers. **[6]**

OR

Q6) a) What is grafting of polymers. Explain in brief different types of grafting techniques. **[12]**

b) What is the plasma treatment? What is the importance of plasma treatment for polymer substrates. **[6]**

Q7) a) What is solubility? Briefly explain the Henry law of solubility. **[6]**

b) What is sorption? What is the relation between sorption and molecular weight distribution. **[6]**

c) Explain in brief the effect of humidity on the properties of polymers. **[5]**

OR

Q8) a) What are the factors which affect the permeant molecule? **[6]**

b) Define Fick's second law of diffusion. **[6]**

c) The oxygen permeability of amorphous PET at 25°C has been found tobe 14 cc mil/d 100 in 2 atm. What is the value of P at 50°C? Ep = 38KJ/mol. **[5]**



Total No. of Questions : 8]

SEAT No. : ____

P6704

[Total No. of Pages : 1

[6181] - 285

B.E. (Printing Technology)

MULTIMEDIA ADVERTISING

(2019 Pattern) (Semester - VII) (408282 A) (Elective - IV)

Time : 2 ½ Hours] ***[Max. Marks : 70***

Instructions to the candidates:

1) ***Solve Q.1 or Q.2, Q.3 or Q.4, Q.5 or Q.6, Q.7 or Q.8.***
2) ***Numbers to right indicate full marks.***

Q1) Public relations advertisement is generally done-before release of issues by a company. Justify such strategy adopted by company, with suitable case study. **[18]**

OR

Q2) State features, advantages, and limitations of

a) Outdoor media **[9]**

b) Audio medium **[9]**

Q3) What is preference buying behaviour exhibited by consumer for taking buying decision, explain with suitable case. **[17]**

OR

Q4) What are different types of market surveys, explain with suitable example. **[17]**

Q5) Explain service advertisement and product advertisement in details. **[18]**

OR

Q6) What are different types of marketing, which type is used recently and why. **[18]**

Q7) Why campaigning is preferred for advertising, justify with suitable case study**.** **[17]**

OR

Q8) What is job of a visualiser and art director in an advertising agency. **[17]**

❄ ❄ ❄

Total No. of Questions : 8]

SEAT No. :

P6705

[Total No. of Pages : 2

[6181] - 286

B.E. (Printing Engineering)

PROCESS OPTIMIZATION AND TOTAL QUALITY MANAGEMENT IN PRINTING

(2019 Pattern) (Semester - VII) (408282 B) (Elective - IV)

Time : 2 ½ Hous] ***[Max. Marks : 70***

Instructions to the candidates:

1) ***Solve Q.1 or Q.2, Q.3 or Q.4, Q.5 or Q.6, Q.7 or Q.8.***
2) ***Figures to the right indicate full marks.***
3) ***Assume suitable data, if necessary.***
4) ***Neat diagrams must be drawn wherever necessary.***
5) ***Use of electronic pocket calculator is allowed.***

Q1) Define precision and accuracy with respect to the spectral reflectance measurement instruments used in the Print and Packaging industry. Give an example procedure to calculate the precision and accuracy of a sectrophometer. **[17]**

OR

Q2) What is TPM? Explain AM, FI and PM pillars of TPM with suitable examples with reference to printing industry. **[17]**

Q3) What are standards? Explain the structure of a standardizing body that is involved in defining standards used in the Printing and Packaging industry. **[18]**

OR

Q4) What do ISO 12647 standards recommed? Describe ISO 12647 in detail. **[18]**

OR

P.T.O.

Q5) What is the purpose of ISO13655 standard? Explain the ISO13655 standard in detail. **[17]**

OR

Q6) What is print process control? Explain print process control giving an example? **[17]**

Q7) What is Linear Regression? Explain Linear Regression with an example. **[18]**

OR

Q8) What is Multiple Linear Regression? Calculate CIEXYZ of the given color patches using the below given 3×3 matrix. **[18]**

	R	G	B
Patch 1	0.408	0.60	0.075
Patch 2	0.114	0.114	0.866

$$\text{Matrix}: \begin{bmatrix} 0.412 & 0.357 & 0.181 \\ 0.212 & 0.715 & 0.072 \\ 0.019 & 0.119 & 0.950 \end{bmatrix}$$

❄ ❄ ❄

Total No. of Questions : 8]

SEAT No. :

P-6706

[Total No. of Pages : 2

[6181]-287

B.E. (Printing Engineering)

OPERATIONS MANAGEMENT IN PRINTING AND PACKAGING

(2019 Pattern) (Semester - VIII) (408290)

Time : 2½ Hours] ***[Max. Marks : 70***

Instructions to the candidates :

1) ***Solve Q1 or Q2, Q3 or Q4, Q5 or Q6, Q7 or Q8.***
2) ***Black figures to the right indicate full marks.***
3) ***Assume suitable data, if necessary.***
4) ***Neat diagrams must be drawn wherever necessary.***
5) ***Use of electronic pocket calculator is allowed.***

Q1) What is product life cycle, what is its impact on production planning and control. **[18]**

OR

Q2) Compare and contrast between product breakdown structure and work breakdown structure. **[18]**

Q3) Find an optimal sequence for following sequencing problem. Also find total elapsed time. **[17]**

Job:	1	2	3	4
Machine M1	6	5	4	7
Machine M2	4	5	3	2
Machine M3	1	3	4	2
Machine M4	2	4	5	1
Machine M5	8	9	7	5

OR

P.T.O.

Q4) Find the optimal sequence for following sequencing problem of 4 jobs on 5 machines, when passing is not allowed. Its processing time (in hours) is given below. **[17]**

Job	Machine				
	M1	M2	M3	M4	M5
A	7	5	2	3	9
B	6	6	4	5	10
C	5	4	5	6	8
D	8	3	3	2	6

Q5) What are functions of production planning and control, explain with suitable case study. **[18]**

OR

Q6) What are stages of production planning and control, explain in greater details.**[18]**

Q7) State Continuous or flow production system its features, advantages, limitations if any. **[17]**

OR

Q8) State about Batch and mass production systems their features, advantages, limitations if any. **[17]**



Total No. of Questions : 8]

SEAT No. : ____

P-6707

[Total No. of Pages : 2

[6181]-288

B.E. (Printing)

ADHESIVES AND COATINGS IN PACKAGING

(2019 Pattern) (Semester - VIII) (408291)

Time : 2½ Hours] ***[Max. Marks : 70***

Instructions to the candidates:

1) ***Attempt Q1 or Q2, Q3 or Q4, Q5 or Q6, Q7 or Q8.***
2) ***Figures to the right side indicate full marks.***
3) ***Assume Suitable data, if necessary.***
4) ***Neat diagrams must be drawn wherever necessary.***

Q1) a) What are lamination adhesives? Explain various applications. **[7]**

b) Compare the type of adhesives for general label and pressure-sensitive labels. Explain any 3 points of differentiation. **[10]**

OR

Q2) a) Explain raw material testing in adhesives. **[6]**

b) Explain in detail following tests: Tack, Peel Resistance, Cohesive strength. **[5]**

c) Explain special characteristics required in case of food grade adhesives. **[6]**

Q3) a) Explain briefly on various Coatings used for metals and flexible films to provide gloss and surface hardness such as prevent scuffing. **[12]**

b) Explain what is release liners in case of labels. Why coating is important in this application. **[5]**

OR

Q4) a) Explain difference between Water Resistant Barriers vs. Water Vapour Barriers. **[5]**

b) Differentiate between PE coatings and Wax coatings in terms of scuff resistance and water barrier properties. **[12]**

P.T.O.

Q5) a) Describe the Wire-wound Rod Coater used in coating of liquids. Draw neat diagrams wherever necessary. **[6]**

b) Describe the difference between air knife and doctor blade in gravure application. Draw a neat diagram of 5 roll coating machine. **[12]**

OR

Q6) a) Describe all types of comma coating techniques. **[6]**

b) Explain coating rod method and draw neat diagram of Meyers Coating rod method. **[12]**

Q7) a) Describe any 3 adhesion test methods **[12]**

b) Explain scratch resistance testing with a neat diagram. **[6]**

OR

Q8) a) Explain significance of various standards to test the adhesives. **[6]**

b) In testing of Adhesives explain Breaking Strength and Elongation at Break. **[12]**

⌘⌘⌘

Total No. of Questions : 8]

SEAT No. :

P-6708

[Total No. of Pages : 2

[6181]-289

B.E. (Printing Technology)

FOOD AND PHARMACEUTICAL PACKAGING

(2019 Pattern) (Semester - VIII) (408288A) (Elective - V)

Time : 2½ Hours] ***[Max. Marks : 70***

Instructions to the candidates:

1) ***Solve Q1 or Q2, Q3 or Q4, Q5 or Q6, Q7 or Q8.***
2) ***Black figures to the right indicate full marks.***
3) ***Assume suitable data, if necessary.***
4) ***Neat diagrams must be drawn wherever necessary.***
5) ***Use of electronic pocket calculator is allowed.***

Q1) a) Explain Extrusion Technology and its working principle with diagram. **[9]**

b) Explain Lamination techniques and its types. **[9]**

OR

Q2) a) Explain Polymer compatibility for co-extrusion process. **[9]**

b) Explain Die Cutting Process and its type. **[9]**

Q3) a) Which products are known as FMCG products and what is the importance of right packaging for FMCG Products. **[8]**

b) Explain the workflow of Vertical Form Fill Seal Machine (VFFS) with examples. **[9]**

OR

Q4) a) Explain conduction sealing process with its benefits. **[8]**

b) Explain the working of Auger fillers & Rotary Fillers with examples. **[9]**

P.T.O.

Q5) a) What is Blister Packaging and Write down the advantages and disadvantages of blister packaging. **[9]**

b) Explain the Processing of Retort Pouch. **[9]**

OR

Q6) a) Explain Pouch Making process its benefits. **[9]**

b) Explain the procedure of making blister packaging. **[9]**

Q7) a) Explain Quality Assurance Aspects of Packaging. **[8]**

b) Explain the Legislative and Safety Aspects for Migration from Packaging to Foods. **[9]**

OR

Q8) a) Explain the concept of Child Resistant Packaging. **[8]**

b) Explain the rules and regulations defined in FDA Guidelines. **[9]**

⌘⌘⌘

Total No. of Questions : 8]

SEAT No. :

P-6709

[Total No. of Pages : 1

[6181]-291

B.E. (Printing Technology Engineering)

SUSTAINABLE PACKAGING

(2019 Pattern) (Semester - VIII) (408289A) (Elective - VI)

Time : 2½ Hours] ***[Max. Marks : 70***

Instructions to the candidates:

1) ***Solve Q.1 or Q.2, Q.3 or Q.4, Q.5 or Q.6, Q.7 or Q.8.***
2) ***Figures to the right indicate full marks.***
3) ***Assume suitable data, if necessary.***
4) ***Neat diagrams must be drawn wherever necessary.***
5) ***Use of an electronic pocket calculator is allowed.***

Q1) Explain in detail the Cyclic and Safe Packaging Design. **[18]**

OR

Q2) Explain the role of biodegradable materials used for sustainable packaging. **[18]**

Q3) Explain the workflow of implementing circular economy thinking. **[17]**

OR

Q4) Explain the application of Industry 4.0 in the Food and Beverage Industry. **[17]**

Q5) Describe the Life Cycle Assessment for a Liquid product. **[18]**

OR

Q6) Compare Carbon Offset and Carbon Credit. Explain stages in the Life Cycle of Carbon Offset. **[18]**

Q7) Define a Brand and explain in detail Brand Positioning. **[17]**

OR

Q8) Justify the efficiency of transportation and package size on Sustainability. **[17]**

□□□

Total No. of Questions : 8]

SEAT No. :

P-6710

[Total No. of Pages : 2

[6181]-292

B.E. (Printing Technology Engineering)

MANAGEMENT INFORMATION SYSTEMS & DATA SCIENCE

(2019 Pattern) (Semester - VIII) (Elective - VI) (408289 B)

Time : 2½ Hours] ***[Max. Marks : 70***

Instructions to the candidates :

1) ***Solve Q.1 or Q.2, Q.3 or Q.4, Q.5 or Q.6, Q.7 or Q.8.***
2) ***Figures to the right side indicate full marks.***
3) ***Assume suitable data if necessary.***
4) ***Neat diagrams must be drawn wherever necessary.***
5) ***Use of electronic pocket calculator is allowed.***

Q1) Explain the term 'Decision', components of decision making and areas of decision making process in detail with suitable example. **[17]**

OR

Q2) Explain the types of decisions taken by different levels of management with suitable examples. Also explain structured and unstructured types of decisions with suitable examples. **[17]**

Q3) Explain the process of sales and marketing activities involved in printing firm with reference to E-enterprise. And how MIS helps in today's highly competitive business environment with suitable examples. **[18]**

OR

Q4) Explain with suitable examples various techniques used in data as well as information security in E-commerce business. And also explain the role of 'Real time information' in printing industry with examples. **[18]**

P.T.O.

Q5) Explain any 3 models used in decision making process with suitable examples. **[17]**

OR

Q6) Explain the classification of 'Accounting' and also explain 'Management Accounting' and 'Cost Accounting' with suitable examples. **[17]**

Q7) Explain in detail how standard cost helps to ascertain the estimate of a job with suitable examples related to the printing business. **[18]**

OR

Q8) Explain the term 'Estimation' and purpose, functions of estimation and qualities of a good estimator required in any printing firm. **[18]**

▽▽▽▽

Total No. of Questions : 8]

SEAT No. :

P6711

[Total No. of Pages : 2

[6181]-293

B.E. (Production)

AUTOMATION AND CONTROL ENGINEERING

(2019 Pattern) (Semester - VII) (411081)

Time : 2½ Hours] *[Max. Marks : 70*

Instructions to the candidates:

1) ***Answer Q.1 or Q.2, Q.3 or Q.4, Q.5 or Q.6, Q.7 or Q.8.***
2) ***Neat diagrams must be drawn wherever necessary.***
3) ***Figures to the right side indicate full marks.***
4) ***Use of Calculator is allowed.***
5) ***Assume Suitable data if necessary***

Q1) a) With neat sketch, explain the principle of working of twin pressure value and also state its applications. **[6]**

b) A single stage air compressor compress an air from 1 bar pressure to 6 bar pressure. Determine the volumetric efficiency and volume of air induced for the following data: **[12]**

- Clearance volume = 0.040 m^3
- Swept volume = 0.60 m^3

Compression and expansion to follow the law $PV^{1.3} = C$

OR

Q2) a) Draw a pneumatic circuit for a machine operated either by manual switch or automatic switch and to ensure that the workpiece is properly clamped and door of the machine is not open. **[8]**

b) Explain with neat sketch the working of lubricator in pneumatic system. **[6]**

c) Draw suitable pneumatic circuit to execute following Boolean expression.

$$y = A.\overline{B} + \overline{A}.B$$ **[4]**

Q3) a) Explain Microprocessor - 8085 with pin diagram. **[9]**

b) What are the criteria for selection of microcontroller in any embedded system? **[8]**

OR

P.T.O.

Q4) a) Write a 8085 μP program to perform following operations: **[9]**

- Clear the accumulator
- Add B5 H
- Subtract 3CH
- Add 6D H
- Display the result at output port.

b) Explain the difference between microprocessor and microcontroller. **[8]**

Q5) a) Draw a ladder diagram to actuate a motor control relay. When the motor is 'ON' a red lamp glows and when then motor is 'OFF' green lamp glows. Explain various logic gates used in ladder diagram. **[9]**

b) Obtain the controller output of an Integral controller for a process having transfer function $\frac{2}{s+4}$ for step response of 3. Feedback transfer function is the gain of 0.1 and proportional gain K = 2. **[8]**

OR

Q6) a) Draw and explain ladder diagram for a motor with following. Normally open start button, normally closed stop button, thermal overload switch opens at high temperature, green light when running and red light for thermal overload. **[9]**

b) Explain the performance characteristics of PID controller. **[8]**

Q7) a) Explain with neat sketch the distributed control system. **[9]**

b) What is fail safe system in SCADA? Explain PLC redundancy method to make design fail safe. **[9]**

OR

Q8) Write a notes on: **[18]**

a) Data acquisition system

b) Remote terminal unit

c) Digital communication unit

✪ ✪ ✪

Total No. of Questions : 8]

SEAT No. : ____

P6712

[Total No. of Pages : 3

[6181]-294

B.E. (Production)

OPERATIONS RESEARCH

(2019 Pattern) (Semester-VII) (411082)

Time : 2½ Hours] ***[Max. Marks : 70***

Instructions to the candidates:

1) ***Answer Q.1 or Q.2, Q.3 or Q.4, Q.5 or Q.6, Q.7 or Q.8.***
2) ***Neat diagrams must be drawn wherever necessary.***
3) ***Assume suitable data if necessary.***
4) ***Use graph paper for graphical solution.***

Q1) a) Describe distinguishing characteristics of dynamic programming. **[10]**

b) Describe algorithm of dynamic programming. **[7]**

OR

Q2) a) Describe computational procedure in dynamic programming. **[5]**

b) A company has 8 salesmen, and are to be allotted to four marketing zones. The return of profit from each zone depends upon the number of salesmen working in that zone. From past records, the expected returns for different number of salesmen in different zones are given below. Determine optimal policy. **[12]**

No. of Salesmen	Zone 1	Zone 2	Zone 3	Zone4
0	45	30	35	42
1	58	45	45	54
2	70	60	52	60
3	82	70	64	70
4	93	79	72	82
5	101	90	82	95
6	108	98	93	102
7	113	105	98	110
8	118	110	100	110

P.T.O.

Q3) a) Explain types of Failures. **[5]**

b) A milk plant is considering replacement of a machine whose cost price is Rs. 12,200 and the scrap value Rs. 200. The running (Maintenance and operating) costs in Rs. are Found from experience to be as follows: when should the machine be replaced? **[12]**

Year:	1	2	3	4	5	6	7	8
Running cost	200	500	800	1200	1800	2500	3200	4000

OR

Q4) a) Discuss group replacement policies. **[5]**

b) A machine owner finds from his past records that the maintenance costs per year of a machine whose purchase price is Rs. 8000 are as given below: **[12]**

Year :	1	2	3	4	5	6	7	8
Maintenance Cost ;	1,000	1,300	1,700	2,200	2,900	3,800	4,800	6,000
Resale Price:	4,000	2,000	1,200	600	500	400	400	400

Determine at which time it is profitable to replace the machine.

Q5) a) The pay off of different strategies against conditions (events) Shown in following table. **[12]**

Which strategy should the concerned executive will choose on the basis of

i) MaxiMax criteria or criteria of optimism.

ii) MaxiMin criteria or criteria of Pessimistic [Wald criteria]

iii) MiniMax Regret criteria or Savage Criteria.

Status of Nature (product Demand)				
Strategy	High	Moderate	Low	Nill
Expand	50,000	25,000	–25,000	–45,000
Construct	70,000	30,000	–40,000	–80,000
Subcontract	30,000	15,000	–1,000	–10,000

b) Describe the following with suitable illustration. **[6]**

i) Minmin criteria

ii) Hurwicz criteria or criteria of realism

OR

Q6) a) The pay off of different strategies against conditions (events) shown in following table. **[8]**

Which strategy should the concerned executive will choose on the basis of

i) Hurwicz criteria or criteria or Realism [alfa=0.8]

ii) Laplace criteria or Criteria of Rationality

	Status of Nature (Product demand)			
Strategy	High	Moderate	Low	Nill
Expand	50,000	25,000	–25,000	–45,000
Construct	70,000	30,000	–40,000	–80,000
Subcontract	30,000	15,000	–1,000	–10,000

b) Solve the following game by dominance and select the strategies and find the game value. **[10]**

		Player B			
		I	II	III	IV
Player A	I	3	2	4	0
	II	3	4	2	4
	III	4	2	4	0
	IV	0	4	0	8

Q7) a) Describe single and multiple server queuing model. **[6]**

b) In a bank 25 customers arrives on an average after every 10 minutes for withdrawing the cash. On an average the cashier at the payment counter takes 8 minutes to serve 30 customers. **[12]**

Calculate:

i) Arrival rate and service rate.

ii) Average number of customers in the bank (in the system)

iii) Average number of customers in the queue or average queue length

iv) Average time of a customer spends in the system.

v) Average waiting time of a customer in the queue before service.

OR

Q8) a) Describe operating characteristics of queuing system. **[10]**

b) Discuss Assumptions and limitations of queuing theory. **[8]**

● ● ●

Total No. of Questions : 8]

SEAT No. :

P6713

[Total No. of Pages : 2

[6181] - 295

B.E. (Production Engineering)

SIMULATION, MODELING AND DIGITAL TWIN

(2019 Pattern) (Semester -VII) (Elective - III) (411083 A)

Time : 2 ½ Hours] ***[Max. Marks : 70***

Instructions to the candidates:

1) ***Answer Q.l or Q.2, Q.3 or Q.4, Q.5 or Q.6, Q.7 or Q8.***
2) ***Neat diagrams must be drawn whenever necessary.***
3) ***Assume suitable data if necessary.***
4) ***Use of non-programmable scientific calculators is allowed.***
5) ***Figures to the right side indicate full marks.***

Q1) a) Describe the creation of the simulation models using an example. **[8]**

b) Describe how the simulation models are verified and validated using appropriate examples. **[9]**

OR

Q2) a) Write short notes on: **[8]**

i) Accreditation of Models Conflдence Intervals.

ii) Hypothesis Testing.

b) How is the three-step technique used to validate the model? **[9]**

Q3) a) Describe the digital twin. List the several industries in which it is utilised. **[9]**

b) What are the essential conditions for applying digital twin to various industries? **[9]**

OR

Q4) a) Describe the use of digital twins in product-based sectors with an appropriate example. **[9]**

b) What kinds of tools and methods are employed in industries to enable the utilisation of digital twins? **[9]**

P.T.O.

Q5) a) Write short note on **[8]**

i) Automation Simulation.

ii) Digital enterprise.

b) Briefly explain the working and trends in the process industry. **[9]**

OR

Q6) a) What specifications apply to control systems in the process industry? Develop a few of them. **[8]**

b) Briefly describe how a process industry uses digital thread. **[9]**

Q7) a) Describe how the use of digital twins might enhance product quality. **[9]**

b) How may efficiency be increased by the discovery of bottlenecks? Give a relevant example. **[9]**

OR

Q8) a) How the flexibility in production can be achieved by applying digital twin? **[9]**

b) Write short note on : **[9]**

i) Improvement in production process by application of digital twin.

ii) Improvement in process safety by application of digital twin.

❄ ❄ ❄

Total No. of Questions : 8]

SEAT No. : [ ]

P6714

[Total No. of Pages : 2

[6181] - 296

B.E. (Production Engineering)

TOTAL QUALITY MANAGEMENT

(2019 Pattern) (Semester - VII) (411083 B) (Elective - III)

Time : 2 ½ Hours] ***[Max. Marks : 70***

Instructions to the candidates:

1) ***Answer Q.l or Q.2, Q.3 or Q.4, Q.5 or Q.6, Q.7 or Q8.***
2) ***Neat diagrams must be drawn whenever necessary.***
3) ***Figures to the right side indicate full marks.***
4) ***Use of calculator is allowed.***
5) ***Assume suitable data, if necessary.***

Q1) a) Explain concept Zero defect, Just in time (JIT). **[9]**

b) Explain code of conduct for Benchmarking. **[9]**

OR

Q2) a) Explain Ishikawa's Seven Quality Tools in detail. **[9]**

b) Explain Stages of FMEA in detail. **[9]**

Q3) a) Describe BathTub curve with suitable sketch. **[9]**

b) How to achieve higher reliability in the system? **[8]**

OR

Q4) a) Explain concept of MTBF and MTTF in reliability. **[9]**

b) Describe the concept of maintainability and availability in detail. **[8]**

P.T.O.

Q5) a) Discuss various teams used for TQM. **[9]**

b) How to evaluate an organization for quality? **[9]**

OR

Q6) a) How to do value -addition process during internal Audit? **[9]**

b) How to organize for quality implementation? **[9]**

Q7) a) What are the major elements of ISO 9001 : 2000? **[9]**

b) Discuss ISO 14000 series standards. **[8]**

OR

Q8) a) Explain implementation and operation of EMS. **[8]**

b) Describe quality system 9000. **[9]**

❄ ❄ ❄

Total No. of Questions : 8]

SEAT No. :

P6715

[Total No. of Pages : 2

[6181] - 297

B.E. (Production Engineering)

ARTIFICIAL INTELLIGENCE IN MANUFACTURING

(2019 Pattern) (Semester - VII) (411083 C) (Elective - III)

Time : 2 ½ Hours] *[Max. Marks : 70*

Instructions to the candidates:

1) ***Solve Q.l or Q.2, Q.3 or Q.4., Q.5 or Q.6.,Q.7 or Q8.***
2) ***Figures to the right side indicate full marks.***

Q1) a) Describe the application of GA in machine learning. **[6]**

b) Explain five phases that are considered in a genetic algorithm. **[6]**

c) What is Roulette-Wheel selection in reproduction scheme of GA? **[5]**

OR

Q2) a) Describe the flowchart of GA. **[6]**

b) What are the parameters of GA? Explain in brief. **[6]**

c) Explain briefly the role different operators in GA. **[5]**

Q3) a) Differentiate between Feed-Forward Neural Networks and Recurrent Neural Networks. **[6]**

b) Which are the steps of a back propagation BP algorithm? Explain. **[6]**

c) What is Boltzmann machine in neural network? **[5]**

OR

Q4) a) What are the major limitations of back propagation algorithm? **[6]**

b) Which are the characteristics of Boltzmann machine in neural network? **[6]**

c) What is associative memory and which are its types? **[5]**

P.T.O.

***Q*5)** a) Describe Quality Assurance & Inspection of a Manufactured Product with Computer Vision. **[6]**

b) Which are the challenges and pitfalls of AI Adoption? **[6]**

c) What is Industrial Machine Vision. Which are its benefits? **[6]**

OR

***Q*6)** a) Explain Ware house Automation to Improve Interoperability of Vehicles. **[6]**

b) Describe Product and Component Assembly using machine vision. **[6]**

c) Describe Optical sensor-based process monitoring in additive manufacturing. **[6]**

***Q*7)** a) What is a role of AI in the Industrial Sector? **[6]**

b) Which are the benefits of Intelligent Manufacturing? **[6]**

c) Discuss the case study of typical application of AI in tool selection. **[6]**

OR

***Q*8)** a) How AI will change design and manufacturing? **[6]**

b) What is the value of Artificial Intelligence in the Warehouse? **[6]**

c) Discuss the application of AI in process selection. **[6]**

❄ ❄ ❄

Total No. of Questions : 8]

SEAT No. : [ ]

P6716

[Total No. of Pages : 2

[6181] - 298

B.E. (Production Engineering)

WORLD CLASS MANUFACTURING

(2019 Pattern) (Semester - VII) (411083 D) (Elective - III) (Theory)

Time : 2 ½ Hours] ***[Max. Marks : 70***

Instructions to the candidates:

1) ***Answer Q.l or Q.2, Q.3 or Q.4 Q.5 or Q.6, and Q.7 or Q.8.***
2) ***Neat diagrams must be drawn whenever necessary.***
3) ***Assume suitable data, if necessary.***

Q1) a) List various functions of Store. **[6]**

b) List various steps in Purchase cycle. **[6]**

c) List the 5S used in Visual management. **[5]**

OR

Q2) a) Explain Rapid Prototyping used as Material Processing & Handling tool in WCM. **[6]**

b) Explain various types of Stores. **[6]**

c) Which are six big losses in TPM? **[5]**

Q3) a) What is Statistical Quality Control? **[6]**

b) Explain 3M with example. **[6]**

c) Discuss Poka-Yoke with example. **[6]**

OR

Q4) a) What is Rapid Prototyping as a Product development tool. **[6]**

b) What is Spaghetti Chart used for? Explain. **[6]**

c) What is Product Mix? Explain. **[6]**

P.T.O.

Q5) a) Discuss organization structure of any world class organization. **[8]**

b) Explain various motivation techniques. **[9]**

OR

Q6) a) Define Organizational Learning. Explain characteristics of Learning Organization. **[8]**

b) Discuss how root cause analysis techniques are used in WCM? **[9]**

Q7) a) Discuss effect of Green Manufacturing. **[9]**

b) Write Short Note on Clean Manufacturing. **[9]**

OR

Q8) a) Write short note on Agile Manufacturing. **[9]**

b) Discuss a case study related to WCM of any organization. **[9]**

❄ ❄ ❄

Total No. of Questions : 8]

SEAT No. : ____

P6717

[Total No. of Pages : 2

[6181] - 299

B.E. (Production Engineering)

PLANT MAINTENANCE AND INDUSTRIAL SAFETY

(2019 Pattern) (Semester - VII) (Elective - IV) (411084 A)

Time : 2 ½ Hours] ***[Max. Marks : 70***

Instructions to the candidates:

1) ***Solve Q.1 Or Q.2, Q.3 Or Q.4, Q.5 Or Q.6, Q.7 Or Q.8.***
2) ***Neat diagrams must be drawn whenever necessary.***
3) ***Figures to the right indicate full marks.***
4) ***Assume suitable data if necessary.***
5) ***Use of logarithmic tables, slide rules, Mollier charts, electronic pocket calculator and steam table is allowed.***

Q1) a) What are the causes of machine vibration? **[5]**

b) Describe the on-load and off-load testing. **[6]**

c) What are the benefits of condition monitoring? **[6]**

OR

Q2) a) Discuss magnetic attraction and image analysis techniques. **[7]**

b) Explain temperature monitoring and crack monitoring methods. **[10]**

Q3) a) Explain the implementation of Factories Act-1948. **[8]**

b) Explain the History and development of Industrial safety. **[10]**

OR

Q4) a) Safety at work increase Productivity of Industry : Justify. **[8]**

b) What do you mean by safety? Discuss how Safety Engineering helps in improving productivity of an organization. **[10]**

P.T.O.

Q5) a) How Industrial Psychology is helpful in preventing accident in Industries? **[7]**

b) Discuss in detail the aims of First Aid. **[10]**

OR

Q6) a) List the personal protective equipments for following human body parts: **[7]**

i) Head
ii) Ear
iii) Face
iv) Eye
v) Overall body
vi) Foot and leg
vii) Fingers and hands

b) Explain various factors affecting the selection of plant location. **[10]**

Q7) a) Define the following as per stipulated of the Workmen's compensation Act, 1923. **[8]**

i) Dependent
ii) Partial disablement
iii) Total disablement

b) Explain the Explosive Act. **[10]**

OR

Q8) a) Explain how Occupational safety affects company reputation and productivity? **[8]**

b) Explain the Indian Boilers Act-1923 **[10]**

❄ ❄ ❄

Total No. of Questions : 8]

SEAT No. :

P6718

[Total No. of Pages : 2

[6181] - 300

B.E. (Production Engineering)

SURFACE ENGINEERING

(2019 Pattern) (Semester - VII) (Elective - IV) (411084 B)

Time : 2 ½ Hours] ***[Max. Marks : 70***

Instructions to the candidates:

1) ***Solve Q.1 Or Q.2, Q.3 Or Q.4, Q.5 Or Q.6, Q.7 Or Q.8***
2) ***Figures to the right indicate full marks.***

Q1) a) State the advantages and applications of diffusion coating processes. **[10]**

b) Describe any one carburizing process? **[8]**

OR

Q2) a) Which thermal spray coating processes? Explain HVOF (High Velocity Oxy Fuel Spraying). **[10]**

b) Which are the different metal cladding processes? Explain any one. **[8]**

Q3) a) Which are the advantages of ion implantation? **[10]**

b) Which are surface engineering problems related to substrate characteristics. **[8]**

OR

Q4) a) Explain any Plasma-based surface engineering processes for wear and corrosion protection. **[10]**

b) Describe chemical vapor deposition process with its advantages. **[8]**

P.T.O.

Q5) a) Describe measurement of Thickness of Coatings and Films by indentation method. **[10]**

b) Explain magnetic particle testing of surface defects. **[7]**

OR

Q6) a) What is Adhesion Testing? Why test Adhesion? **[10]**

b) Which are the different destructive testing methods of modified Surfaces?

Explain any one. **[7]**

Q7) a) Which paints and coatings that address Environmental Issues? Discuss. **[10]**

b) Write note on simulation of actual application environment in tribometer. **[7]**

OR

Q8) a) Describe the use of Laser in Surface Engineering. **[10]**

b) Describe X-ray Photoelectron Spectroscopy (XPS) to analyze the surface morphology of nonomaterials? **[7]**

❄ ❄ ❄

Total No. of Questions : 8]

SEAT No. : ____

P6719

[Total No. of Pages : 2

[6181] - 301

B.E. (Production Engineering)

REVERSE ENGINEERING

(2019 Pattern) (Semester - VII) (411084 C) (Elective - IV) (Theory)

Time : 2 ½ Hours] ***[Max. Marks : 70***

Instructions to the candidates:

1) ***Answer Q.1 or Q.2, Q.3 or Q.4, Q.5 or Q.6, Q.7 or Q.8.***
2) ***Neat diagrams must be drawn wherever necessary.***
3) ***Assume suitable data if necessary.***
4) ***Use of Non-programmable scientific calculators is allowed.***
5) ***Figures to the right indicate full marks.***

Q1) a) Along with neat sketches explain any two optical techniques used for data collection. **[8]**

b) Discuss in brief the four stages of the RE data processing chain and the RE operations at each stage. **[9]**

OR

Q2) a) Sort the reverse engineering software into different categories based on the intended use. **[8]**

b) Explain fundamental reverse engineering techniques with an appropriate case. **[9]**

Q3) a) Explain contact and non contact devices used for data capturing in reverse engineering. **[9]**

b) Describe stereoscopic imaging systems and structured-light systems. **[9]**

OR

Q4) a) How to choose a reverse engineering system while considering technical requirements and business potential. **[9]**

b) Describe the creation of curves and surfaces with appropriate examples. **[9]**

P.T.O.

Q5) a) Write a brief remark on data processing in reverse engineering. **[8]**

b) How the initial point is determined to start the construction of first segment? **[9]**

OR

Q6) a) Briefly explain how the adaptive layer thickness is determined? **[8]**

b) How the Integration of RE and RP for Layer-based Model Generation is done? **[9]**

Q7) a) Explain briefly, using suitable examples, how reverse engineering is used in the automobile industry. **[9]**

b) Discuss the constraints of using reverse engineering techniques in the actual world. **[9]**

OR

Q8) a) What are the obstacles to implementing reverse engineering? **[9]**

b) How the reverse engineering concepts can be applied in Aerospace industries? **[9]**

❄ ❄ ❄

Total No. of Questions : 8]

SEAT No. :

P6720

[Total No. of Pages : 3

[6181] - 302

B.E. (Production Engineering)

ENTREPRENEURSHIP AND INNOVATIONS

(2019 Pattern) (Semester - VII) (411084 D) (Elective - IV)

Time : 2 ½ Hours] *[Max. Marks : 70*

Instructions to the candidates:

1) ***Neat diagrams must be drawn wherever necessary.***
2) ***Figures to the right side indicate full marks.***
3) ***Solve Q1 or Q2, Q3 orQ4, Q5 or Q6, Q7 or Q8.***
4) ***Use of electronic pocket Calculator is allowed.***
5) ***Assume Suitable data jf necessary.***

Q1) a) What is Entrepreneurship? Why is entrepreneurship important? **[9]**

b) What are the factors of entrepreneurship? **[9]**

OR

Q2) a) What are the Problems of entrepreneurship development in India? **[9]**

b) List and explain the stages in the entrepreneurship development process. **[9]**

Q3) a) What are the 5 stages of the accounting process? **[8]**

b) What is the importance of conceiving a good of project idea. **[9]**

OR

Q4) a) What are the steps involved in project identification and selection? **[9]**

P.T.O.

b) **[8]**

Liabilities	Rs.	Assets	Rs.
Equity Share Capital	10,000	Fixed assets (less depreciation Rs. 10,000)	26,000
7% Preference Share Capital	2,000	Current Assets:	
Reserves and Surplus	8,000		
6% Mortgage Debentures	14,000	Cash	1,000
Current Liabilities:		Investments (10%)	3,000
Creditors	1,200	Sundry debtors	4,000
Bills payable	2,000	Stock	6,000
Outstanding expenses	200		
Tax Provision	2,600		
	40,000		40,000

From the following balance sheet of Mr. Arvind Industries Ltd., as 31st March 2022.

Other information:

i) Net sales Rs. 60,000

ii) Cost of goods sold Rs. 51,600

iii) Net income before tax Rs. 4,000

iv) Net income after tax Rs. 2,000

Calculate:

1) Current Ratio
2) Debtors Turnover Ratio
3) Gross profit ratio

Q5) a) What are the 5 project management tips? **[8]**

b) What is project control Example? **[9]**

OR

Q6) a) Why are planning performance and control important in the execution of projects? **[8]**

b) Why is planning and control essential for a project? **[9]**

Q7) a) What are the main features of Workmen Compensation Act? **[9]**

b) What are the general types of taxes? **[9]**

OR

Q8) a) What are the characteristics elements of partnership? **[9]**

b) What are the five most important business issues that can lead to legal problems for global marketers? **[9]**

❄ ❄ ❄

Total No. of Questions : 8]

SEAT No. :

P-6721

[Total No. of Pages : 3

[6181]-303

B.E. (Production Engineering)

COMPUTER INTEGRATED DESIGN AND MANUFACTURING

(2019 Pattern) (Semester - VIII) (411088)

Time : 2½ Hours] *[Max. Marks : 70*

Instructions to the candidates:

1) ***Answer Q1 or Q2, Q3 or Q4, Q5 or Q6, Q7 or Q8.***
2) ***Neat diagrams must be drawn wherever necessary.***
3) ***Figures to the right side indicate full marks.***
4) ***Assume Suitable data, if necessary.***

Q1) a) Explain with neat sketch fused deposition method. **[7]**

b) Explain any two-manufacturing module in MRP - II. **[10]**

OR

Q2) a) Explain the various phases of ERP implementation. **[7]**

b) Write note on- capacity planning module and material requirement module. **[10]**

Q3) a) Compare the absolute and incremental method of programming in NC machines. **[6]**

b) Write a CNC program in G and M code to turn a part as shown in fig No. 1. Also write a remark for each block. **[12]**

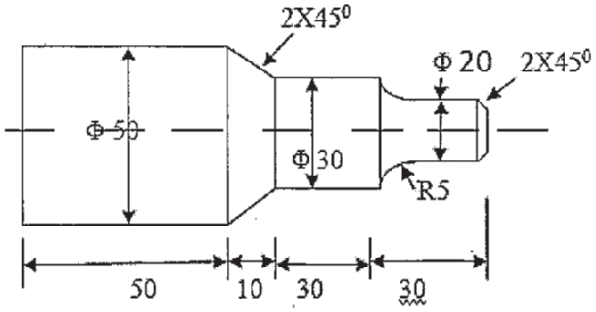

Fig. No. 1 (All dimension are in MM)

OR

P.T.O.

Q4) a) Draw neat sketches for CNC and DNC. State the distinct features of its. **[6]**

b) Write a CNC program in G and M codes for drilling the three holes in part as shown in Fig.No.2 also write remark for each block. **[12]**

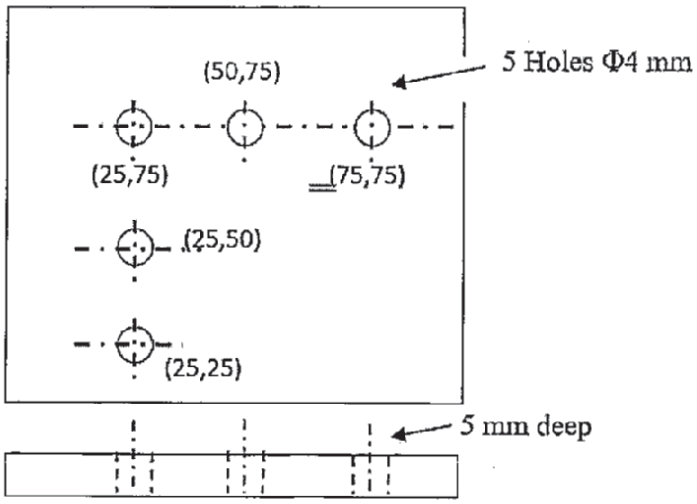

Fig. No. 2 (All dimension are in MM)

Q5) a) Fig. No. 3 shows stepped bar subjected to forces 10KN and 5 KN, find stresses in it. Given Modulus of elasticity: E1 = 200Gpa and E2 = 70 Gpa, Area: A1 =150 mm^2 and A^2 = 100 mm^2.Determine nodal deflection and the reaction at the support **[12]**

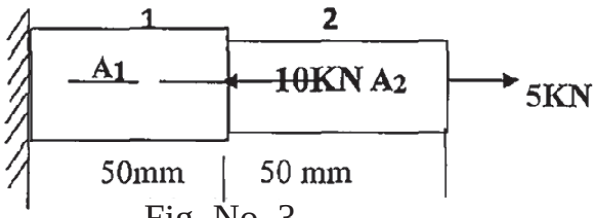

Fig. No. 3

b) Derive a relation between local coordinate and global coordinate system for truss element. **[6]**

OR

Q6) a) Fig.No.4 shows truss consisting of three elements whose AE/L value is 2000 N/mm. calculate the deflection at node 2. **[12]**

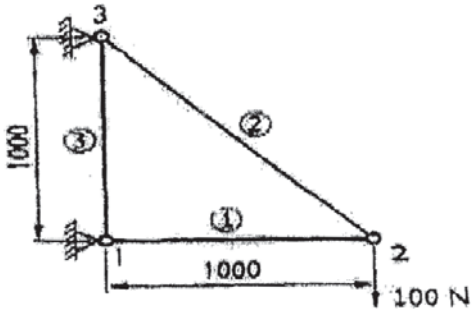

Fig. No. 4

b) With neat sketch write Matrix analysis for force, load and displacement of 1-dimensional single rod element. **[6]**

Q7) a) What is Flexible Manufacturing System (FMS)? Explain the classification on level of flexibility. **[8]**

b) Consider the following part machine matrix. Apply Rank Order Clustering (ROC) Algorithm to identify the part families and machine groups. **[9]**

Parts

Machines ⇩	A	B	C	D	E	F	G
1	0	1	0	1	1	1	0
2	1	0	1	0	0	0	0
3	1	0	1	0	0	1	1
4	0	1	0	1	0	1	0
5	1	0	0	0	1	0	1

OR

Q8) a) Classify the FMS based on number of machines with neat sketch **[9]**

b) Explain monocode and ploy code system for coding the parts in GT.**[8]**

Total No. of Questions : 8]

SEAT No. : ____

P-6722

[Total No. of Pages : 3

[6181]-304

B.E. (Production)

INDUSTRIAL ROBOTICS

(2019 Pattern) (Semester - VIII) (411089)

Time : 2½ Hours] ***[Max. Marks : 70***

Instructions to the candidates:

1) ***All questions are compulsory.***
2) ***Figures to the right indicate full marks.***

Q1) a) Explain the difference between partial differentiation and velocity propagation method to determine the Jacobian. **[8]**

b) Explain Lagrangian formulation for manipulator dynamics. **[10]**

OR

Q2) a) State the EOM for 2DOF robot manipulator with necessary details. **[8]**

b) Explain Newton- Euler formulation for manipulator dynamics. **[10]**

Q3) a) Explain working principle of absolute and incremental optical encoders. **[8]**

b) The image of an object is represented by an array of pixels. The light intensity values at the different pixels are given below. **[10]**

100	105	88	70
110	106	56	88
95	80	65	75
100	75	90	85

Determine pre-processed data using :

i) Masking operation

ii) Neighborhood averaging method with a 3 × 3 size of neighborhood

iii) Median filtering with a 3 × 3 neighborhood.

OR

P.T.O.

Q4) a) Explain the working principle of inductive, capacitive and hall effect sensor. **[8]**

b) The 8 × 8 array of pixels indicating each element as the gray level of pixel is given below. i) Construct the histogram and find threshold value. ii) Convert it into black and white image. iii) perform shape analysis (first and second order moments, centroids, run length encoding, principal angle) The 8 × 8 array of pixels indicating each element as the gray level of pixel is given below. i) Construct the histogram and find threshold value. ii) Convert it into black and white image. iii) perform shape analysis (first and second order moments, centroids, run length encoding, principal angle) **[10]**

8	12	13	11	12	11	13	7
6	13	10	15	15	17	14	15
9	12	13	16	16	15	15	11
8	12	14	16	15	15	15	11
9	12	15	15	15	15	15	15
7	13	14	16	16	16	11	13
8	7	6	10	12	10	8	8
6	9	8	9	10	16	12	17

Q5) a) Give the detail classification of robot programming methods with appropriate examples. **[6]**

b) Discuss the detail steps for programming a robot for industrial applications **[10]**

OR

Q6) a) How to interface robot with computers? **[6]**

b) Write and explain a robot program for nut and bolt assembly. **[10]**

Q7) Write short note on : **[18]**

a) Walking robots

b) Machine mounted robots

c) AI and Robotics

OR

Q8) Write short note on : **[18]**

a) Climbing robots

b) Welding robots

c) AI and intelligent agents

□□□

Total No. of Questions : 8]

SEAT No. :

P-6723

[Total No. of Pages : 2

[6181]-305

B.E. (Production)

E-MOBILITY IN AUTOMOBILE

(2019 Pattern) (Semester - VIII) (411090(A)) (Elective - V)

Time : 2½ Hours] ***[Max. Marks : 70***

Instructions to the candidates:

1) ***Answer Q1 or Q2, Q3 or Q4, Q5 or Q6, Q7 or Q8***
2) ***Neat diagrams must be drawn wherever necessary.***
3) ***Figures to the right side indicate full marks.***
4) ***Assume suitable data if necessary.***

Q1) a) Explain the requirements and challenges of EV drives. **[9]**

b) Discuss classification of Electrical Vehicle motors. **[8]**

OR

Q2) a) Compare electrical vehicles motors with industrial motors. **[9]**

b) Explain principle and construction of electric drive train. **[8]**

Q3) a) Discuss types of source used for Electrical Vehicles. **[9]**

b) What is charging station? Explain Solar Powered Electric Vehicle Charging Station. **[9]**

OR

Q4) a) How calculation and Selection of components of charging station done? Discuss it. **[9]**

b) Explain how to prevent fire for EVs Charging Stations. **[9]**

Q5) a) Discuss power saving & coordinated charging for EV. **[9]**

b) Explain the configuration of EV. **[8]**

OR

P.T.O.

Q6) a) What are layout of power converters for V2G operation? **[9]**

b) Which type of charging strategy is utilized for V2G? **[8]**

Q7) a) What is power electronics requirements for fuel cell? **[9]**

b) How fuels are controlled in the current automobile system? **[9]**

OR

Q8) a) What is APU control system in series of Hybrid Vehicles **[9]**

b) Explain fuel cell hybrid Electric Vehicles. **[9]**

Total No. of Questions : 8]

SEAT No. :

P-6724

[Total No. of Pages : 2

[6181]-306

B.E. (Prod Engg.)

SMART MANUFACTURING

(2019 Pattern) (Semester - VIII) (411090(B)) (Elective - V)

Time : 2½ Hours] *[Max. Marks : 70*

Instructions to the candidates :

1) ***Solve Q.1 or Q.2, Q.3 or Q.4, Q.5 or Q.6, Q.7 or Q.8.***
2) ***Draw suitable neat diagrams, whenever necessary.***
3) ***Figures to the right indicate full marks.***
4) ***Assume suitable data if necessary.***

Q1) a) Explain the role of sensors ins mart manufacturing. **[6]**

b) What is basic operation of manufacturing equipment in smart manufacturing? **[6]**

c) Which are the challenges that can be addressed by effective data analysis? **[5]**

OR

Q2) a) What is software connectivity in smart manufacturing? **[6]**

b) What is data contextualization in smart manufacturing? **[6]**

c) Explain Condition-based and predictive asset management in smart manufacturing. **[5]**

Q3) a) Explain data-based models. **[6]**

b) Which are the four enabling technologies for industry 4.0? **[6]**

c) Which are the challenges of Industrial AI and predictive analytics for smart manufacturing systems? **[5]**

OR

Q4) a) What are the data requirements of From data and model to value? **[6]**

b) Explain model reduction in process modeling. **[6]**

c) Explain Analytics technologies of industry 4.0. **[5]**

P.T.O.

Q5) a) Explain the Optimization methods for complex optimization systems. **[6]**

b) Explain PAROC in smart manufacturing. **[6]**

c) Explain High-fidelity dynamic modeling and model approximation. **[6]**

OR

Q6) a) Which are the multidisciplinary system design optimization approaches? **[6]**

b) What is Asset autonomy in smart manufacturing? **[6]**

c) Write note on Smart manufacturing concepts. **[6]**

Q7) a) Describe variations to PCA/PLS. **[6]**

b) Which are the Characteristics of process data? Explain in brief. **[6]**

c) Explain Inferential control and state estimation-based approaches. **[6]**

OR

Q8) a) Describe use of Artificial neural networks for soft sensor building. **[6]**

b) Explain Smart Manufacturing as data-enabled sustainable manufacturing. **[6]**

c) Describe Support vector machines as data driven sensor. **[6]**

▽▽▽▽

Total No. of Questions : 8]

SEAT No. : ____

P-6725

[Total No. of Pages : 2

[6181]-307
B.E. (Production Engineering)
MANUFACTURING SYSTEM DESIGN
(2019 Pattern) (Semester - VIII) (411090C) (Elective - V)

Time : 2½ Hours] ***[Max. Marks : 70***

Instructions to the candidates :

1) ***Solve Q.1 or Q.2, Q.3 or Q.4, Q.5 or Q.6, Q.7 or Q.8.***
2) ***Neat diagrams must be drawn wherever necessary.***
3) ***Figures to the right indicate full marks.***
4) ***Assume suitable data, if necessary.***

Q1) a) What are different steps followed in Task Allocation and Sequencing? **[8]**

b) Write short note on: Manufacturing system design Configuration. **[8]**

c) Brief shortly about Hybrid Manufacturing System. **[3]**

OR

Q2) a) Write factor which considered in Station Level Design. **[8]**

b) Write short note on fixturing. **[8]**

c) What is a Need of Manufacturing System? **[3]**

Q3) a) Write short note on Group technology. **[8]**

b) Write Production Flow Analysis(PFA) in details. **[8]**

c) Write advantages and limitation of Group Technology. **[3]**

OR

Q4) a) What is Part Family? What are Benefits of part Families. **[8]**

b) Explain Different type of codes in Design and Manufacturing Attributes. **[8]**

c) Mentioned Methods for Part Family Formation. **[3]**

P.T.O.

Q5) a) What are principles of Lean Production. **[8]**

b) Write short note on: **[8]**

i) Value stream Mapping

ii) JIT

OR

Q6) a) Write Short note On Zero Inventory. **[8]**

b) What is Opportunity cost? Explain. **[8]**

Q7) a) What are material selection parameter in process planning. **[8]**

b) What do you mean by CAPP? **[8]**

OR

Q8) a) What are different steps in Process planing? **[8]**

b) Write short note on MRP (material requirement schedule). **[8]**



Total No. of Questions : 8]

SEAT No. :

P-6726

[Total No. of Pages : 3

[6181]-308

B.E. (Production Engineering)

ERGONOMICS AND WORK MANAGEMENT

(2019 Pattern) (Semester - VIII) (411090D) (Elective - V)

Time : 2½ Hours] ***[Max. Marks : 70***

Instructions to the candidates:

1) ***Answer Q.1 or Q.2, Q.3 or Q.4, Q.5 or Q.6 and Q.7 or Q.8.***
2) ***Neat diagrams must be drawn wherever necessary.***
3) ***Assume Suitable data if necessary.***

Q1) a) Explain the situations best suited for auditory information and visual information. **[8]**

b) Describe various types of controls used to transmit information to machine. **[9]**

OR

Q2) a) Describe various types of displays with neat sketch. **[8]**

b) Describe Desktop PC seating workplace arrangement considering ergonomic risk factors. **[9]**

Q3) a) Define Work study. Describe the various objectives of work study. **[8]**

b) Define productivity. State the advantages of productivity.

The following information regarding the output produced and input consumed for a particular time period for a ABC company is given below:

Compute various productivity indexes **[9]**

	Rs
Output	15000
Labour	3000
Capital	2000
Material	2500
Energy	750
Other expenses	500

P.T.O.

OR

Q4) a) Define Basic work content.

Describe the factors which affects the basic work content (i.e. excess work content) **[8]**

b) Define productivity. State the dynamics of productivity change. **[9]**

The following information regarding the output produced and input consumed for a particular time period for a ABC company is given below:

Compute various productivity indexes

	Rs
Output	100000
Labour	4000
Capital	3000
Material	20000
Energy	12000
Other expenses	1500

Q5) a) Define Method study. Describe various steps to carry out method study. **[9]**

b) Describe the economic and technical factors to be considered while selecting the job for method study. **[9]**

OR

Q6) a) Describe principles of motion economy related to workplace design with neat sketches. **[9]**

b) Describe Two Handed process chart with suitable illustration & appropriate symbols and its meaning. **[9]**

Q7) a) Define Time study. **[9]**

Describe various steps to carry out Time study.

b) The time study is carried for an operation. The elemental data for the time (minutes) for a particular operation and the rating is shown as follows: **[9]**

Calculate :

i) Normal (Basic) time

ii) Standard time considering allowance of 15%.

Element No.	Cycle1	Cycle 2	Cycle 3	Cycle 4	Rating
1	1	1.1	1.2	0.9	110
2	1.5	1.4	1.5	1.6	100
3	3	3.1	2.9	3.1	120
4	2	1.9	2	2	95
5	2.5	2.5	2.4	2.6	100
6	1.4	1.6	1.5	1.4	100
7	2	1.9	2	2.1	110

OR

Q8) a) Describe the following types of Rating : **[9]**

i) Westinghouse system

ii) Synthetic Rating

b) Describe the process to carry out work sampling study. **[9]**

State how the standard time is calculated using work sampling study.

Total No. of Questions : 8]

SEAT No. :

P-6727

[Total No. of Pages : 2

[6181]-309

B.E. (Production)

FACILITY PLANNING

(2019 Pattern) (Semester - VIII) (411091A) (Elective-VI)

Time : 2½ Hours] ***[Max. Marks : 70***

Instructions to the candidates :

1) ***Neat diagrams must be drawn whenever necessary.***
2) ***Use of electronic pocket calculator is allowed.***
3) ***Assume suitable data, if necessary.***

Q1) a) Explain in detail functions of the Warehouse. **[8]**

b) Discuss in detail Fixed Automation System with advantages and limitations. **[10]**

OR

Q2) a) Explain in detail Receiving and Shipping operations in Warehouse. **[8]**

b) Discuss in detail Flexible Manufacturing Systems. **[10]**

Q3) a) Discuss in detail Structural System Performance. **[8]**

b) Explain in detail significance of Electrical and Lighting Systems in manufacturing organization. **[10]**

OR

Q4) a) Discuss in detail Sanitation Systems in manufacturing organization. **[10]**

b) Explain in detail Facilities Maintenance Management Systems. **[8]**

Q5) a) Write a short note on Automated Storage and Retrieval Systems. **[7]**

b) Discuss in detail Machine Layout Model. **[10]**

OR

P.T.O.

Q6) a) Explain in detail Waiting Line Model. **[10]**

b) Discuss in detail Simulation Model. **[7]**

Q7) a) Explain the factors Influencing Facility Location. **[8]**

b) Discuss any one method of evaluating location decision. **[9]**

OR

Q8) a) Explain the factors to be considered for implementing Facility Layout. **[8]**

b) Discuss 7 Steps to develop the maintenance plan of the facility. **[9]**



Total No. of Questions : 8]

SEAT No. :

P-8693

[Total No. of Pages : 2

[6181]-310A
B.E. (Production)
ADDITIVE MANUFACTURING
(2019 Pattern) (Semester-VIII) (Elective - VI) (411091B)

Time : 2½ Hours] ***[Max. Marks : 70***

Instructions to the candidates :

1) ***Answer Q1 or Q2, Q3 or Q4, Q5 or Q6, Q.7 or Q8.***
2) ***Neat diagrams must be drawn wherever necessary.***
3) ***Figures to the right indicate full marks.***
4) ***Assume suitable data, if necessary.***

Q1) a) Explain Stereolithography process with sketch. **[9]**

b) What are various types of liquid based additive manufacturing systems? **[9]**

OR

Q2) a) Discuss principle and working of Cubital's Solid Ground Curing (SGC). **[9]**

b) Write advantages, disadvantages and working of Meiko's rapid prototyping system for the jewellery industry with sketch. **[9]**

Q3) a) Explain with neat sketch working of fused deposition modeling. **[9]**

b) Describe with neat sketch kir's paper lamination technology. **[8]**

OR

Q4) a) Discuss advantages, disadvantages and working Beijing Yinhua's Slicing Solid Manufacturing (SSM). **[9]**

b) Write short note on Melted Extrusion Modeling (MEM) and Multi-Functional RPM Systems (M-RPM) **[8]**

Q5) a) Explain working of Selective Laser Sintering with sketch and discuss its applications. **[9]**

b) What is Three Dimensional Printing? Discuss process, advantages and applications. **[9]**

OR

P.T.O.

Q6) a) Discuss the Laser Engineered Net Shaping (LENS) powder based process. **[9]**

b) Explain working and applications of Electron Beam Melting. **[9]**

Q7) a) How Computer Aided Tissue Engineering (CATE) is different from manufacturing? **[9]**

b) Write note on Biopsy Needle Housing and Knee Implants. **[8]**

OR

Q8) a) Explain applications of Scaffolds for Tissue Engineering and Customized Tracheobronchial Stents. **[9]**

b) What is significance of AM in Vertebral Spacers and Cranium Implant? **[8]**



Total No. of Questions : 8]

SEAT No. :

P-6729

[Total No. of Pages : 2

[6181]-311

B.E. (Production Engineering)

RELIABILITY ENGINEERING

(2019 Pattern) (Semester - VIII) (411091C) (Elective - VI)

Time : 2½ Hours] *[Max. Marks : 70*

Instructions to the candidates:

1) ***Solve Q-1 OR Q-2, Q-3 OR Q-4, Q-5 OR Q-6, Q-7 OR Q-8.***
2) ***Neat diagrams must be drawn whenever necessary.***
3) ***Figures to the right indicate full marks.***
4) ***Assume suitable data if necessary.***
5) ***Use of logarithmic tables, slide rules, Mollier charts, electronic pocket calculator and steam table is allowed.***

Q1) a) What are the main objectives of maintenance management? **[7]**

b) Define availability and maintainability for the system from the following data collected at a plant. **[10]**

Mean time before failure: 35 Hrs.

Mean time to repair: 10 Hrs.

Administrative and logistic time : 50% of MTTR

Calculate operational availability and inherent availability of the plant.

OR

Q2) a) What do you understand by "Operational Availability" and "Inherent Availability"? Derive expression for these two. **[7]**

b) Explain various types of maintenance techniques. **[10]**

Q3) a) Describe dynamic programming apportionment technique. **[8]**

b) System requires a reliability of 0.9 for 10 hours of operation. There are four units connected in series with their failure rates $\lambda_1 = 0.002$, $\lambda_2 = 0.003$, $\lambda_3 = 0.004$ and $\lambda_4 = 0.007$. Allocate reliabilities to the four units. **[10]**

P.T.O.

OR

Q4) a) Explain AGREE apportionment teehnique. **[8]**

b) Four units are connected in series with reliabilities 0.85, 0.9, 0.8 and 0.95 calculate the system reliability. If the reliability is to be increased to value of 0.65, how this should be apportioned among the four units according to the minimum effort method. **[10]**

Q5) a) Explain the procedural steps involved in FMECA. **[7]**

b) What is meant by FMEA and FMECA? Explain the application of Risk Priority Number (RPN) in FMECA with example. **[10]**

OR

Q6) a) For an emergency operation theatre in a hospital, the power is obtained from the main city supply through a transformer connected in series. To ensure an uninterrupted supply, an auxiliary generator is also used with a suitable switch over. Draw a block diagram and Construct fault tree for the system. **[7]**

b) How Boolean Algebra principles can help in simplifying the FMEA diagram, so that the estimation of overall failure probability becomes easier. **[10]**

Q7) a) What are the objectives of Life Tests? List the different types of Reliability Test. **[8]**

b) In a short sample "accelerated life testing" of a system based on Weibull distribution the following data is recorded. **[10]**

Failure No	1	2	3	4	5	6	7	8	9
MTTF (hrs)	24	22	12	28	35	38	30	19	25

Plot the variation of reliability against time using:

i) Mean ranking and

ii) Median ranking method.

OR

Q8) a) Explain in detail Highly Accelerated Life Testing (HALT). **[8]**

b) Explain the Markov model. How it is applied in reliability analysis of a system having constant hazard rate? **[10]**

⌘⌘⌘

Total No. of Questions : 8]

SEAT No. :

P-6730

[Total No. of Pages : 2

[6181]-312

B.E. (Production Engineering)

DATA ANALYTICS

(2019 Pattern) (Semester - VIII) (411091D) (Elective - VI)

Time : 2½ Hours] ***[Max. Marks : 70***

Instructions to the candidates:

1) ***All questions are compulsoty i.e. Solve Q.1 or Q.2, Q.3 or Q.4, Q.5 or Q. 6. & Q.7 or Q.8.***
2) ***Assume suitable data, if necessary.***
3) ***Use of electronic pocket calculator is allowed.***
4) ***Neat diagrams must be drawn wherever necessary.***

Q1) a) Explain linear and multiple regressions in detail. **[9]**

b) Explain Neural network in detail with application. **[9]**

OR

Q2) a) Write short note on : **[9]**

i) Data mining

ii) Applications of data analysis

b) Explain conjoint analysis and its need. **[9]**

Q3) a) Write a short note on : **[8]**

i) Regression and classification

ii) Classification Techniques

b) Explain support vector machine algorithm with example. **[9]**

OR

Q4) a) Explain random forest in detail with example. **[8]**

b) Explain predictive analysis with example. **[9]**

P.T.O.

Q5) a) What is prescriptive analysis with example? **[8]**

b) Explain Decision tree with example **[9]**

OR

Q6) a) Explain principal component analysis in detail. **[8]**

b) Explain genetic algorithm in detail. **[9]**

Q7) a) Write a short note on : **[10]**

i) Markov Chain analysis

ii) Regression based ML model

b) Explain Monte Carlo simulation in detail. **[8]**

OR

Q8) a) Explain Q learning and its application. **[8]**

b) Write a short note on : **[10]**

i) Reinforcement learning

ii) SARSA Learning



Total No. of Questions : 8]

SEAT No. :

P6731

[Total No. of Pages : 3

[6181]-313

B.E. (Production Sandwich Engineering)

MANUFACTURING AUTOMATION

(2019 Pattern) (Semester - VII) (411121)

Time : 2½ Hours] *[Max. Marks : 70*

Instructions to the candidates:

1) ***Answer Q.1 or Q.2, Q.3 or Q.4, Q.5 or Q.6, Q.7 or Q.8,***
2) ***Neat diagrams must be drawn whenever necessary.***
3) ***Figures to the right indicate full marks.***
4) ***Assume suitable data, if necessary and mention it clearly.***
5) ***Use of non-programmable calculator is allowed.***

Q1) a) Explain construction and working of solenoid valve type valve. What are the factors to be considered for selecting solenoids? **[5]**

b) Design of Pneumatic Circuit for Single Cycle Automation of Multi cylinders in the Sequence of A+ B+ B–A–. **[5]**

c) Define Pneumatics. What are the Basic Components of Pneumatic System? factors to be considered. while selecting Components of Pneumatic System. **[6]**

OR

Q2) a) List seven basic elements used in Electro pneumatic circuits pneumatic control. Draw the sketch of Direction control valve actuator. **[5]**

b) Draw only Pneumatic circuit for **[5]**

i) 5/2 Valve actuation control

ii) 5/3 Valve actuation control

c) Explain construction and working of solenoid valve type valve. What are the factors to be considered for selecting solenoids? **[6]**

Q3) a) Draw the format of PSW register of 8051 microcontroller and explain the function of each bit. **[6]**

b) Compare any three derivatives of 8051 microcontroller on the basis of RAM, ROM, Timer and Interrupts. **[6]**

P.T.O.

c) Explain the following concept of microcontroller? **[6]**

i) What are the addressing modes available in 8051 microcontrollers?

ii) How is the instruction set classified?

iii) What is an assembly language?

OR

Q4) a) Explain with block diagram the architecture of 8051 microcontroller. **[6]**

b) Explain the following concept of microcontroller? **[6]**

i) What is an ALU?

ii) What is the function of the accumulator?

iii) What is a flag?

c) Differentiate between Harvard and Von-Neuman architecture (4 Point). **[6]**

Q5) a) Classify three basic types of manufacturing systems. Explain Three basic types of manufacturing systems **[6]**

i) single-station cells

ii) multistation systems with fixed routing, and

iii) multistation systems with variable routing.

b) Define AGV list Types of AGV What are the components of AGV? What are the Benefits of AGV Explain variety of areas to support processing and handling throughout a facility. **[6]**

c) Define automated Transfer Line Explain In-line - straight line arrangement of work stations, Segmented In-Line Configurations Rotary Indexing Type System Configurations. **[6]**

OR

Q6) a) Explain the following type with block diagram Dial Indexing Machine, Carousel Assembly System, Single-Station Assembly Cell Multi-station assembly machine or line. **[6]**

b) List principal components of automatic identification technologies, List AIDC technologies six categories. List applications of AIDC technologies in production and distribution? **[6]**

c) Explain Features and operations of single-station manufacturing cells? difference between single-station manned cell and single-station automated cell? **[6]**

Q7) a) Define **[6]**

i) Linguistic Variable

ii) Fuzzy Conditional Statements

iii) Fuzzy Algorithm

b) Define Human Computer Interface Introduction (HCI), In Which areas and where HCI can be implemented with distinctive importance, Guidelines in (HCI), software tools in HCI **[6]**

c) What is Artificial Intelligence? Brief Philosophy, Goals, Contribution, Multiple areas, Applications, Technique. **[6]**

OR

Q8) a) Artificial Neural Networks (ANNs)? Explain Basic Structure of ANNs, Explain Machine Learning in ANNs strategies. **[6]**

b) Define ANN, what are the Concept and Fundamentals of (ANN) Artificial Neural Networks, Explain learning situations in neural networks. **[6]**

c) Define of SCADA. What is SCADA? Explain the features and Applications of SCADA system, SCADA systems consisting. **[6]**



Total No. of Questions : 8]

SEAT No. : ____

P6732

[Total No. of Pages : 4

[6181]-314

B.E. (Production Sandwich)
OPERATION RESEARCH
(2019 Pattern) (Semester-VII) (411122)

Time : 2½ Hours] ***[Max. Marks : 70***

Instructions to the candidates:

1) ***Solve Q.1 or Q.2, Q.3 or Q.4, Q.5 or Q.6, Q.7 or Q.8***
2) ***Neat diagrams must be drawn wherever necessary.***
3) ***Figures to the right side indicate full marks.***
4) ***Use of calculators is allowed.***
5) ***Assume suitable data if necessary.***

Q1) a) Explain the methodology used in the cutting plane method. **[6]**

b) Explain in brief Goal programming. State its assumptions. **[6]**

c) What are the essential characteristics of Dynamic programming. **[5]**

OR

Q2) a) Describe Branch & Bound Method for the solution of integer programming problem. **[6]**

b) Describe recursive equation approach to solve dynamic programming problem. **[6]**

c) State the applications of Non linear programming. **[5]**

Q3) a) The following failure rates have been observed for a certain type of light bulb.

Week	1	2	3	4	5
Percentage failure by the end of the week	10	25	50	80	100

There are 1000 bulbs in use, and it costs Rs.2/- to replace an individual bulb, which is burnt out. If all bulbs were replaced simultaneously it would cost 50 paise per bulb. It is proposed to replace all bulbs at fixed intervals of time, whether or not they burnt out, and to continue replacing burnt out bulbs as and when they fail. At what intervals all the bulbs should be replaced? At what group replacement price per bulb would a policy of strictly individual replacement become preferable to the adopted policy? **[10]**

P.T.O.

b) A fleet owner finds form his past records that the cost per year of running a truck and resale values whose purchase price is Rs. 6000/- are given as under. At what stage the replacement is due? **[8]**

Year:	1	2	3	4	5	6	7	8
Running Cost in Rs.	1000	1200	1400	1800	2300	2800	3400	4000
Resale Value in Rs.	3000	1500	750	375	200	200	200	200

OR

Q4) a) The cost of the machine is Rs. 6100/- and its scrap value is Rs. 100 at the end of every year. The maintenance Costs found from experience are as follows.

Year:	1	2	3	4	5	6	7	8
Maintenance Cost (Rs.)	100	250	400	600	900	1200	1600	2000

When should the machine be replaced? **[8]**

b) i) A machine A costs Rs.9000/-. Annual operating costs are Rs. 200/- for the first year and then increases by Rs.2000/- every year. Determine the best age at which the machine A is to be replaced? If the optimum replacement policy is followed, what will be the average yearly cost of owning and operating the machine? Assume machine has no resale value when replaced and that future costs are not discounted.

ii) Machine B costs Rs. 10000/-. Annual operating costs are Rs. 400/- for the first year and then increases by Rs. 800/- every year. You have now a machine of type A, which is of one year old. Should you replace it with B, and if so, when? **[10]**

Q5) a) Two firms are competing for business under the conditions so that one firm's gain is another firm's loss. Firm A 's payoff matrix is given below:

		FIRM B		
		No advertising	Medium advertising	Heavy advertising
FIRM A	No advertising	10	5	–2
	Medium advertising	13	12	15
	Heavy advertising	16	14	10

Suggest optimum strategies for the two firms and the net outcome there of. **[6]**

b) Explain the following terms with reference to game theory **[6]**

i) Payoff matrix

ii) Pure and mixed Strategies

iii) Saddle point

c) Discuss different types of Decision making environments. **[5]**

OR

Q6) a) Solve following 2 x m game theory problem using by graphical method **[7]**

		Player B			
		B1	B2	B3	B4
Player A	A1	2	1	0	–2
	A2	1	0	3	2

b) Two players P and Q play the game. Each of them has to choose one of the three colours: White (W), Black (B) and Red (R) independently of the other. Thereafter the colours are compared. If both P and Q has chosen white (W, W), neither wins anything If player P selects white and Player Q black (W, B), player P loses Rs.2/- or player Q wins the same amount and so on. The complete payoff table is shown below. Find the optimum strategies for P and Q and the value of the game. **[10]**

		Player A		
		W	B	R
Player B	W	0	–2	7
	B	2	5	6
	R	3	–3	8

Q7) a) On an average 96 patients per 24-hours day require the service of an emergency clinic. Also on an average, a patient requires 10 minutes of active attention. Assume that the facility can handle only one emergency at a time. Suppose that it costs the clinic Rs. 100 per patient treated to obtain an average servicing time of 10 minutes, and that each minutes of decrease in this average time would cost Rs. 10 per patient treated. How much would have to be budgeted by the clinic to decrease the average size of the queue from one and one-third patients to half patient. **[8]**

b) A bakery keeps stock of a popular brand of cakes. Previous experience shows the daily demand pattern for the item with associated probabilities, as given. **[10]**

Daily demand (no.s)	0	10	20	30	40	50
Probability	0.01	0.20	0.15	0.50	0.12	0.02

Use the following sequence of random numbers to simulate the demand for next 10 days. Also find out the average demand per day Random Numbers : 25,39,65,76,12,05,73,89,19,49.

OR

Q8) a) Draw the sketch of queuing system and explain various components of it.**[8]**

b) The automobile company manufactures around 150 scooters. The daily production varies from 146 to 154 depending upon the availability of raw materials and other working conditions: **[10]**

Production per day	Probability
146	0.04
147	0.09
148	0.12
149	0.14
150	0.11
151	0.10
152	0.20
153	0.12
154	0.08

The finished scooters are transported in a specially arranged lorry accommodating 150 scooters. Using the random numbers 80, 81, 76, 75, 64, 43, 18, 26, 10, 12, 65, 68, 69, 61, 57, simulate the process to find out: -

i) What will be the average number of scooters waiting in the factory?

ii) What will be the average number of empty space on the lorry?

● ● ●

Total No. of Questions : 8]

SEAT No. :

P6733

[Total No. of Pages : 2

[6181] - 315

B.E. (Production Engineering (Sandwich))
ADDITIVE MANUFACTURING
(2019 Pattern) (Semester - VII) (411123 A) (Elective - III)

Time : 2 ½ Hours] ***[Max. Marks : 70***

Instructions to the candidates:

1) ***Solve Q.l or Q.2, Q.3 or Q.4, Q.5 or Q.6, Q.7 or Q8.***
2) ***Figures to the right indicate full marks.***
3) ***Neat diagrams must be drawn whenever necessary.***
4) ***Assume suitable data, if necessary.***

Q1) a) What is Stereolithography Apparatus. (SLA)'? Write down its Principle, process, advantages and applications. **[9]**

b) What is Solid Ground Curing (SGC) Process? Explain in detail. **[8]**

OR

Q2) a) What are the steps in Additive Manufacturing? Explain each step. **[9]**

b) What are the basic microfabrication techniques? What is the difference of microfabrication and nanotechnology? **[8]**

Q3) a) What is Fused Deposition Modelling (FDM)? Write down its Principle, process, advantages and applications. **[9]**

b) What is Mimics software used for? Explain in detail. **[8]**

OR

Q4) a) With a neat diagram, explain Melted Extrusion Modelling (MEM). **[9]**

b) Write a short note on Multi-Functional RPM Systems (M-RPM). **[8]**

P.T.O.

Q5) a) Explain the critical factors that influence the performance and functions of Selective Laser Sintering and 3-Dimentional printing. **[9]**

b) What is Selective Laser Sintering (SLS)? Write down its Principle, process, advantages and applications. **[9]**

OR

Q6) a) With neat sketch, explain Laser Engineered Net Shaping (LENS). **[9]**

b) What is the principle of Electron Beam Melting? What materials are used in Electron Beam Melting? What are the applications of Electron Beam Melting? **[9]**

Q7) a) Categorize the applications of Additive Manufacturing in the areas of customized implants and prosthesis. **[9]**

b) What is cranial implant? Explain in detail. **[9]**

OR

Q8) a) Discuss with a cases study how design and production of medical devices are done by Additive Manufacturing. **[9]**

b) Write Short notes on Computer Aided Tissue Engineering (CATE). **[9]**

❄ ❄ ❄

Total No. of Questions : 8]

SEAT No. : ____

P6734

[Total No. of Pages : 2

[6181] - 316

B.E. (Production Sandwich Engineering)

INDUSTRIAL ROBOTICS

(2019 Pattern) (Semester - VII) (411123 B) (Elective - III)

Time : 2 ½ Hours] ***[Max. Marks : 70***

Instructions to the candidates:

1) ***Figures to the right indicate full marks.***
2) ***Neat diagrams must be drawn whenever necessary.***
3) ***Assume suitable data, if necessary.***
4) ***Use of Logarithmic Table. Slide rule is Electronic pocket calculator is allowed.***
5) ***Solve Q.l or Q.2, Q.3 or Q.4, Q.5 or Q.6, Q.7 or Q8.***

Q1) a) Explain the working of range & proximity sensor with neat sketch. **[9]**

b) Explain the working of potentiometer with application. **[9]**

OR

Q2) a) With neat sketch explain the working of following sensors in robots :- **[9]**

i) Electro optical sensors

ii) Slip Sensor

iii) Tactile Sensors

b) Explain any three temperature measuring sensors. **[9]**

Q3) a) With neat sketch explain the concept of control system and its types. **[7]**

b) A vacuum gripper is used to lift flat steel plates whose dimension are 0.25×24×36 inches. The gripper will use two cups, 5.0 inches in diameter each & they will be located at 18 inches apart for stability. As safety factor of 2 should be used to allow for acceleration of the plate determine the negative pressure required to be lift the plates if the density of steel is 0.28 lb/in^3. **[10]**

OR

P.T.O.

Q4) a) With neat sketch classify mechanical grippers. **[7]**

b) Explain the following types of magnetic grippers with neat sketch. **[10]**

i) Permanent Magnetic gripper

ii) Electro Magnetic gripper

Q5) a) Explain following Programming methods. **[10]**

i) Manual

ii) Teach Pendant

iii) Walk Through

iv) Offline

b) With neat sketch explain the four levels of robot programming. **[8]**

OR

Q6) a) Explain the steps in development of program for robot system. **[8]**

b) Explain high level programming language and machine language. **[10]**

Q7) a) Explain the role of robots in medical application. **[8]**

b) Explain any three manufacturing operations performed by robots. **[9]**

OR

Q8) a) What is Artificial Intelligence & explain role of Artificial Intelligence in robotics. **[8]**

b) Write a note on :- **[9]**

i) Pick & Place Robots

ii) Welding Robots

iii) Walking Robots

❄ ❄ ❄

Total No. of Questions : 8]

SEAT No. :

P6735

[Total No. of Pages : 3

[6181] - 317

B.E. (Production Engineering (Sandwich))

RELIABILITY ENGINEERING

(2019 Pattern) (Semester - VII) (411123 C) (Elective - III)

Time : 2 ½ Hour] *[Max. Marks : 70*

Instructions to the candidates:

1) ***Solve Q.l or Q.2, Q.3 or Q.4, Q.5 or Q.6, Q.7 or Q8.***
2) ***Figures to the right indicate full marks.***
3) ***Neat diagram must be drawn wherever necessary.***
4) ***Assume suitable data, if necessary.***
5) ***Use of Logarithmic Table. Slide rule is Electronic pocket calculator is allowed.***

Q1) a) A system is composed of 4 units connected in series. The rates for these units are $\lambda 1 = 0.002$, $\lambda 2 = 0.003$, $\lambda 3 = 0.004$, $\lambda 4 = 0.007$. It is desired that the maximum failure rate for the system be $S^A = 0.01$. Allocate this among the four units. **[4]**

b) Explain MTTF for series and parallel system. **[8]**

c) Explain characteristics of exponential distribution. **[6]**

OR

Q2) a) ln life testing of 100 specimens of a particular device the number of failures during each interval of twenty hours is shown in table. Estimate the MTTF for these specimens. **[7]**

Time Interval Hours	Number of failures during the interval
T < 1000	0
1000 < T <=1020	25
1020 < T <= 1040	40
1040 < T <= 1060	20
1060 < T <= 1080	10
1080 < T <= 1100	5

P.T.O.

b) Write the formulas for MTTF, MTTR and MTBF. **[3]**

c) Explain Failure Density (fd). **[8]**

Q3) a) Explain in brief fault Tree Analysis (FTA). **[7]**

b) Explain DE Morgan's Theorem. **[7]**

c) Let A and B be two variables, each of which can be in a binary state 0 or 1. What are the possible values for $\overline{A}$+B & $\overline{B}$*A. **[3]**

OR

Q4) a) Explain in brief Event representations in the Fault Tree Analysis. **[7]**

b) For a logic diagram shown in figure. Construct fault tree. **[7]**

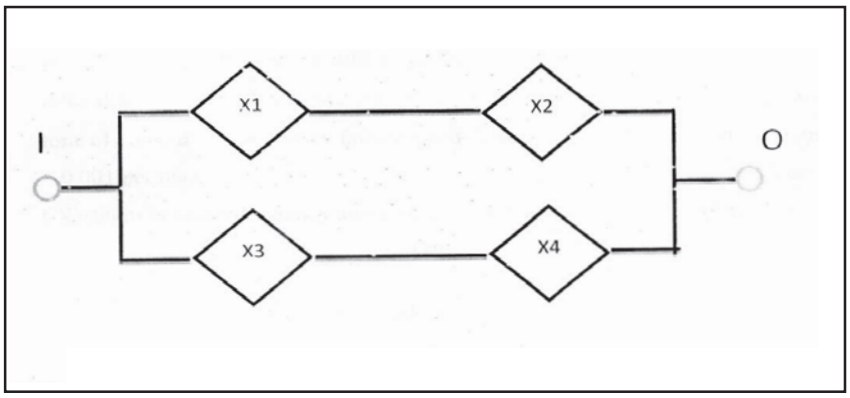

c) Let A and B be two variables, each of which can be in a binary state 0 or 1. What are the possible values for $\overline{A}$+B & $\overline{B}$*$\overline{A}$. **[3]**

Q5) a) Explain Normal Distribution. **[6]**

b) The distribution function for a random phenomenon obeying a uniform probability Law over an interval "a" and "b" is expressed by **[8]**

$F_x(x) = 0$ for $x <= a$

$F_x(x) = (x - a)/(b - a)$ for $a <= x <= b$

$F_x(x) = 1$ for $x > b$

Compute the mean and variance for the uniform probability law.

c) Explain the concept Correlation. **[4]**

OR

Q6) a) What are the characteristics of Weibull distribution. **[6]**

b) What are the properties of Auto and Cross correlation function. **[6]**

c) Compare Normal and lognormal distribution. **[6]**

Q7) a) Define standby redundancy and explain its types. **[7]**

b) The power supply to the operating unit of a hospital is provided by a generator whosefailure rate follows an exponential distribution law with parameters $\lambda 1 = 0.005$ per hour. A standby battery unit is coupled through a decision switch which has a reliability $r_d = 0.90$. Calculate the reliability of the power supply s/m for a mission time of 10 hours if the battery failure rate follows a distribution law with parameter $\lambda 2 = 0.001$ per hour. **[4]**

c) Explain in unit redundancy and element redundancy. **[6]**

OR

Q8) a) Explain imperfect switching in redundancy. **[5]**

b) Explain component verses unit redundancy. **[4]**

c) i) Explain unit redundancy and element redundancy. **[8]**

ii) Consider two elements a and b with reliabilities 0.7 and 0.8 respectively to be connected in series as shown in Figure a

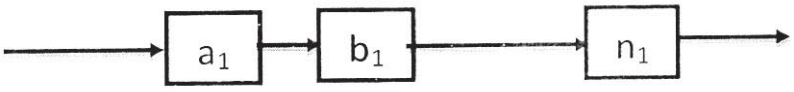

Figure a

if redundancies are introduced in the form shown in figure b and Figure c. What are resultant system reliabilities?

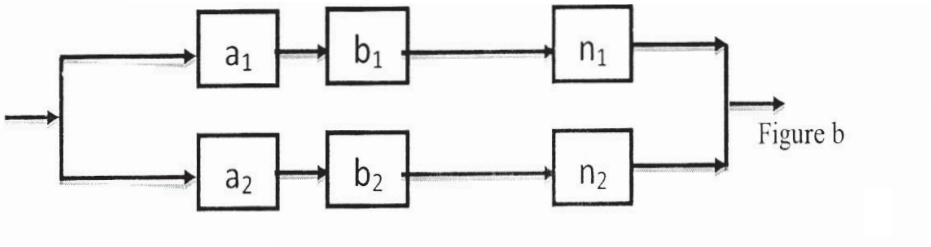

Figure b

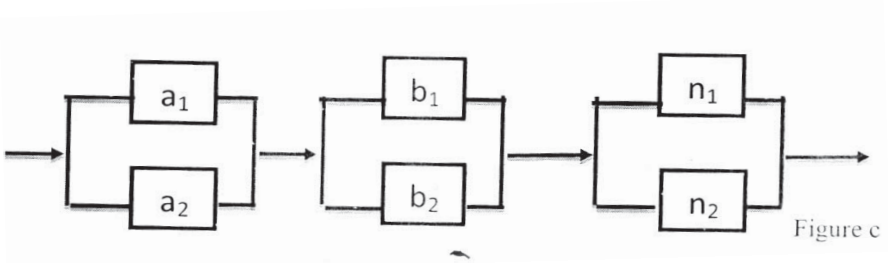

Figure c

❄ ❄ ❄

Total No. of Questions : 8]

SEAT No. : [ ]

P6736

[Total No. of Pages : 2

[6181] - 318

B.E. (PRODUCTION S/W)

MICRO ELECTRO MECHANICAL SYSTEMS

(2019 Pattern) (Semester - VII) (411123 D) (Elective - III)

Time : 2 ½ Hours] ***[Max. Marks : 70***

Instructions to the candidates:

1) ***Answer Q.l or Q.2, Q.3 or Q.4, Q.5 or Q.6, Q.7 or Q8.***
2) ***Neat diagrams must be drawn whenever necessary.***
3) ***Figures to the right indicate full marks.***
4) ***Assume suitable data if necessary.***

Q1) a) What do you understand by Finite Element Analysis? Discuss the concept with an example. **[8]**

b) What do you mean by Thin Film Mechanics in MEMS? Discuss its importance with MEMS. **[9]**

OR

Q2) a) Explain the concept of Thermo Mechanics. How is it related to FEM? **[9]**

b) Discuss the concept of static bending of thin plates. **[8]**

Q3) a) How are electrostatic forces acting in an Electromechanical System? Can they be optimized with MEMS? How? **[9]**

b) Discuss any 2 types of Micro Machining processes in brief. **[9]**

OR

Q4) a) How is Heat Transfer affected and restrained with MEMS. **[9]**

b) What do you mean by Scaling Laws? How are they influenced by MEMS? **[9]**

P.T.O.

Q5) a) What are significant issues related to Surface Micro-Machining. **[8]**

b) Write a note on the LIGA process of Micromachining. **[9]**

OR

Q6) a) Describe in brief the advantages and limitations of Micromachining processes. **[9]**

b) Discuss any 2 types of Micro Machining processes in brief. **[8]**

Q7) a) Discuss the various Membrane-Transducer Materials. **[9]**

b) Discuss the concept of fluorescence detection. **[9]**

OR

Q8) a) Discuss any 2 of following . **[9]**

CLOC 2. E-Nose 3. Chemotransistors 4. Mass sensitive Chemosensors

b) What I calorimetric spectroscopy? Explain in brief. **[9]**

❄ ❄ ❄

Total No. of Questions : 8]

SEAT No. : ____

P6737

[Total No. of Pages : 2

[6181] - 319

B.E. (Production Engineering) (Sandwich)

CREATIVE PRODUCT DESIGN

(2019 Pattern) (Semester - VII) (Elective - IV) (411124 A)

Time : 2 ½ Hours] ***[Max. Marks : 70***

Instructions to the candidates:

1) ***Answer Q.l or Q.2, Q.3 or Q.4, Q.5 or Q.6, Q.7 or Q8.***
2) ***Figures to the right indicate full marks.***
3) ***Use of a programmable calculator is not allowed.***
4) ***Write all necessary steps.***

Q1) a) What are the key points Traditional Brainstorming. **[10]**

b) Draw a Memory (Mind) Map for any potential problem. **[7]**

OR

Q2) a) Explain the process of executing Morphological analysis and give example with the help of Diagram. **[10]**

b) Write short note on Function Trees. **[7]**

Q3) a) Discuss the Steps in Product Teardown. **[10]**

b) Write short note on Force Flow (Energy Flow Field) Diagrams. **[8]**

OR

Q4) a) Write short notes on following Benchmarking Process tools. **[6×3=18]**

i) Thoughts on Benchmarking the Competition.

ii) Indented Assembly Cost Analysis.

iii) Function-Form Diagrams

P.T.O.

Q5) a) Give any ten guidelines for Design for Assembly. **[10]**

b) Write short notes on Cost Modeling. **[7]**

OR

Q6) a) Explain your understanding about Design for manufacture and assembly. **[10]**

b) Mention Material Selection Guidelines and reasons in DFE. **[7]**

Q7) a) Explain the various stages of Product Life Cycle with the help of Diagram. **[8]**

b) State the Advantages of Product life Cycle. **[6]**

c) Define Product Lifecycle Management (PLM) & Product Lifecycle Management System (PLM System) **[4]**

OR

Q8) a) Discuss following terms in context of Product data / Information. **[4×3=12]**

i) Definition data of the product.

ii) Life cycle data of the product.

iii) Metadata that describes the product and lifecycle data.

b) How the Product Life Cycle Works. **[6]**

❄ ❄ ❄

Total No. of Questions : 8]

SEAT No. :

P6738

[Total No. of Pages : 2

[6181]-320

B.E. (Production Engineering/Sandwich)

MECHATRONICS

(2019 Pattern) (Elective - IV) (Semester - VII) (411124 B)

Time : 2½ Hours] *[Max. Marks : 70*

Instructions to the candidates:

1) ***Answer Q.1 or Q.2, Q.3 or Q.4, Q.5 or Q.6, Q.7 or Q.8.***
2) ***Figures to the right indicate full marks.***
3) ***Neat diagrams must be drawn whenever necessary.***
4) ***Use of logarithmic table, slide rule is Electronic pocket Calculator is allowed.***
5) ***Solve 3 Question.***

Q1) a) Write an assembly language code that reverse the data stored in BX. **[8]**

b) Write a program in 8086 assembly language that accepts a character string of maximum size of 10 characters from the keyboard and converts the string to upper case. **[10]**

OR

Q2) a) Explain the concept of Asynchronous Communication. **[8]**

b) Write a Short note on **[10]**

i) Serial Interface Standards

ii) Interface adapters.

Q3) a) Explain in detail about the internal architecture of the (PLC) programmable logic Controllers. **[9]**

b) Discuss about the programmable logic controllers and configurations. **[8]**

OR

Q4) a) An automatic car parking system, when the parking area is full with 10 cars the red bulb at entry should ON to indicate it is full. If the number of car within the parking area is less than 10 the green bulb should ON to indicate that the space of parking is available. **[9]**

b) Explain the working of PLC based Traffic light control with the help of ladder diagram. **[8]**

P.T.O.

Q5) a) Explain the role of modelling and simulation in the analysis of Mechatronics systems. **[7]**

b) Explain the System Modelling **[10]**

i) Mechanical System

ii) Thermal System

OR

Q6) a) Discuss in detail the advanced approaches in Mechatronics such as intelligent Supervisory control structure and model based monitoring system. **[9]**

b) Describe the following with example: **[8]**

Damping Frequency and Damping Factor

Q7) a) State the objectives of Engineering measurements. Measurement. **[6]**

b) List the types of enors in measurement. Give their and state the remedies. **[6]**

c) State and explain any, here desirable static and dynamic characteristics of an instrument. **[6]**

OR

Q8) a) Explain with neat diagram Feedback transducer system. **[9]**

b) Two cylindrical parts of different height are produced and made to move in a conveyor and randomly placed. Tolerance in height is specified for both the parts. Give the schematic diagram for measuring the height of both the parts and counting them by the proper sensors. **[9]**

Total No. of Questions : 8]

SEAT No. : ____

P6739

[Total No. of Pages : 2

[6181] - 321

B.E. (Production Engineering) (Sandwich)

CAD/CAM

(2019 Pattern) (Semester - VII) (411124 C) (Elective - IV)

Time : 2 ½ Hours] ***[Max. Marks : 70***

Instructions to the candidates:

1) ***Answer Q.l or Q.2, Q.3 or Q.4, Q.5 or Q.6, Q.7 or Q8.***
2) ***Figures to the right indicate full marks.***
3) ***Use of a programmable calculator is NOT allowed.***
4) ***Write all necessary steps.***

Q1) a) Discuss important features of Rapid Prototyping & applications. **[9]**

b) Discuss classification of Rapid Prototyping - FDM, LOM, SLA, SLS. **[9]**

OR

Q2) a) Explain CAD and Data exchange format & data format details. **[9]**

b) Discuss Part Slicing and Orientation and its importance. **[9]**

Q3) a) Explain Computer integrated production management system & enterprise resource planning. **[9]**

b) Discuss working principles of CNC Turning center and Milling center. **[8]**

OR

Q4) a) Discuss The Siemens Model of CIM & IBM concept of CIM. **[9]**

b) Discuss steps in developing CNC part program in detail. **[8]**

P.T.O.

Q5) a) Discuss Computer Aided Process Planning. **[9]**

b) Computer integrated production management system, inventory material requirement planning. **[9]**

OR

Q6) a) Explain manufacturing resource planning & enterprise resource planning. **[9]**

b) Discuss Computer application in manufacturing & inspection and quality control. **[9]**

Q7) a) Discuss the elements of Product Life Cycle. **[9]**

b) Discuss machine cell design and Cellular manufacturing. **[8]**

OR

Q8) a) Explain Part Families, Part classification and coding. **[9]**

b) Explain production flow analysis & Rank Order Clustering Algorithm. **[8]**

❄ ❄ ❄

Total No. of Questions : 8] **SEAT No. :**

P6740 **[Total No. of Pages : 3**

[6181]-322

B.E. (Production Engineering) (Sandwich)

DATA ANALYTICS

(2019 Pattern) (Elective - IV) (Semester - VII) (411124 D)

Time : 2½ Hours] ***[Max. Marks : 70***

Instructions to the candidates:

1) ***Solve Q.1 or Q.2, Q.3 or Q.4, Q.5 or Q.6, Q.7 or Q.8.***
2) ***Figure to the right indicates full marks.***
3) ***Neat diagrams must be drawn wherever necessary.***
4) ***Assume suitable data if necessary.***

Q1) a) Following are the three conditions; fill in the blanks with correct option either **[10]**

(i) mean, or

(ii) mode, or

(iii) median which is suitable for that condition. (Write your answers in answers book).

1) Insurance analysts often calculate the_____age of the individuals they provide insurance for so they can know the average age of their customers.
2) Actuaries often calculate the_____amount spends on healthcare each year by individuals so they can know how much insurance they need to be able to provide to individuals.
3) Actuaries also calculate the_____of their customers age so they can know which age group uses their insurance the most.
4) Human Resource managers often calculate the _____salary of individuals in a certain field so that they can know what average salary to offer to new employees.
5) Human Resource managers also calculate the_____of different positions in the company so that they can be aware of the most common position of employees at their company.

b) Find out Mean, Mode, and Median of the Given dataset

D = {1, 2, 3, 4, 5, 6, 7, 8, 9, 10, 11, 12, 13, 14, 15, 16, 17, 18, 19, 20, 21, 27, 28, 29, 2, 3, 4, 5, 7, 8, 9, 12, 13, 17, 19, 35, 40, 42, 2, 3, 4, 12, 19, 52, 2, 61, 96, 2, 3, 96, 97, 99, 102, 2,111} **[8]**

OR

P.T.O.

Q2) a) What do you understand by neural network in deep learning? Write are the advantages, disadvantages and application of the neural network.**[6]**

b) The following is data collected by the 'A' ice-cream manufacturer's sales department in the 'P' city. Let x represent temperature observed in months (^oC), and y represents sell of ice-cream in the same month (tons). They want to analyze their sells with months and their temperatures. The collected data is transferred to R&D department and you are the head of R&D. The company asking you to find out covariance and correlation between temperature and monthly ice-cream sell? **[12]**

Months	Jan.	Feb.	March	April	May	June	July	Aug.	Sept.	Oct.	Nov.	Dec.
x	15	21	31	34	38	37	31	28	23	25	16	13
Y	09	18	21	23	25	19	14	12	10	12	09	08

Q3) a) Discuss the following: **[9]**

i) Expert system

ii) Principal component analysis

iii) Genetic Algorithm

b) What is predictive analysis? Discuss with at least five real-time applications. **[9]**

OR

Q4) a) The job market is being studied is several neighborhoods. Let x represent total number of jobs in a given neighborhood, and y represent entry level jobs in the same neighborhood. A sample six neighborhood gave the following information. **[12]**

i) Find out the linear regression model using least square method.

ii) For a neighborhood with 40 jobs, how many jobs are predicted at entry level?

x	16	33	50	28	50	25
y	2	3	6	5	9	3

b) Write the difference between covariance and correlation. **[6]**

Q5) What is mean by classification algorithm in machine learning? Discuss any three from the following. **[18]**

a) Logistic regression
b) Naive bays
c) K-NN
d) Decision Tree
e) Random Forest

OR

Q6) a) The score of the cricket teams England and New Zealand played in world cup 2019 has given below. Assume both teams played same number of matches. In the last match, both teams scored 241 against each other. With the help of z-score formula find out which team performs consistent and good in the last match as per their series performance. **[12]**

ENG = {350, 305, 337, 221, 212, 397, 321, 311, 334, 241}

NZ = {239, 186, 157, 291, 245, 269, 425, 263, 337, 241}

b) In a class, average placement salaries of the student are 3.1 LPA and given salaries are normally distributed with standard deviation of 2. Then, find how many percentages of student lies between salaries offered from 7.46 LPA to 10 LPA? **[6]**

Q7) a) A factory has machine that dispenses 80 ml of the fluid in a bottle. An employee believes the average amount of fluid is not 80 ml. Using 40 sample, he measures the average amount dispensed by the machine is 78 ml with std. dev. of 2.5. **[10]**

i) State null hypothesis (Ho) and alternative hypothesis (Ha)

ii) At 95% confidence interval level, is there enough evidence to support the idea that machine not working properly?

b) Assume that SAT score are normally distributed and the SAT score of 1150 has a z score of 0.44. Find out how many percentages of students scored above and below the 1150 SAT score? Show the answers using normal distribution plot. **[6]**

OR

Q8) Discuss the following: **[16]**

a) Markov chain analysis
b) Monte carlo simulation
c) Q Learning
d) SARSA

Total No. of Questions : 8]

SEAT No. : [ ]

P-6741

[Total No. of Pages : 2

[6181]-323

B.E. (Production Engineering/Sandwich)

SUPPLY CHAIN MANAGEMENT

(2019 Pattern) (Semester - VIII) (411134A) (Elective - V)

Time : 2½ Hours] ***[Max. Marks : 70***

Instructions to the candidates:

1) ***Solve Q1 or Q2, Q3 or Q4, Q5 or Q6, Q7 or Q8.***
2) ***Figures to the right indicate full marks.***
3) ***Assume suitable data, if necessary.***
4) ***Neat diagrams must be drawn wherever necessary.***

Q1) a) Identify cycles & push-pull boundary in supply chain when you are purchasing Samsung galaxy Note Phone from a shop in your city. **[9]**

b) Write a short note on Economics of Scale Exploit Quantity Discounts. **[8]**

OR

Q2) a) Explain how safety inventory can be estimated and managed in practice. **[9]**

b) What are the different instances of Product Substitution? Discuss with suitable example. **[8]**

Q3) a) What are the factors influencing network design decisions? **[9]**

b) Explain role of IT in transportation. **[8]**

OR

Q4) Explain the following design options for a transportation network. **[17]**

a) Direct shipping with milk runs

b) All shipments via DC

c) Tailored Network

P.T.O.

Q5) a) What are the obstacles for achieving coordination in Supply chain? **[9]**

b) What are the different effects seen because of Bullwhip Characteristics in demand fluctuations in Supply Chain Management? **[9]**

OR

Q6) a) What actions should be taken by managers for achieving coordination in supply chain? **[9]**

b) Discuss the impact of E-Business on customer service in book industry. **[9]**

Q7) a) Explain the role of IT in pricing and revenue management. **[9]**

b) How to evaluate network design decisions using decision trees? **[9]**

OR

Q8) a) Explain the process of risk management in supply chain network. **[9]**

b) Explain the role of pricing and revenue management in supply Chain Management. **[9]**

⌘⌘⌘

Total No. of Questions : 8]

SEAT No. :

P-6742

[Total No. of Pages : 2

[6181]-324

B.E. (Production Engineering Sandwich)

PLANT ENGINEERING & MAINTENANCE

(2019 Pattern) (Semester - VIII) (411134B) (Elective - V)

Time : 2½ Hours] ***[Max. Marks : 70***

Instructions to the candidates:

1) ***Solve Q1 or Q2, Q3 or Q4, Q5 or Q6, Q7 or Q8.***
2) ***Neat diagrams must be drawn wherever necessary.***
3) ***Assume suitable data if necessary.***
4) ***Figures to the right side indicate full marks.***
5) ***Use of logarithmic table, slide rule is electronic pocket calculator is allowed.***

Q1) a) Differentiate between Periodic & Preventive Maintenance. **[8]**

b) Discuss various factors which need to be considered for implementation of efficient spare part control system. **[9]**

OR

Q2) a) Discuss predictive preventive maintenance in detail. **[8]**

b) Discuss in detail about inventory planning. **[9]**

Q3) a) Explain scheduling maintenance in manufacturing industries **[8]**

b) Explain effect of life cycle costing on maintenance. **[9]**

OR

Q4) a) What is reliability? Explain relationship with maintenance. **[8]**

b) Explain various models for calculating life cycle costs. **[9]**

Q5) a) Discuss safety against mechanical hazards. **[9]**

b) Explain various accident prevention practices and codes. **[9]**

OR

P.T.O.

Q6) a) Discuss Importance of safety in Manufacturing. **[9]**

b) Write short note on Energy conservation, management and audit. **[9]**

Q7) a) Explain the condition based maintenance with aid of vibration signature. **[9]**

b) What is Total Productive Maintenance? State merits and demerits of Total Productive Maintenance. **[9]**

OR

Q8) a) Explain Condition based maintenance using SOAP. **[9]**

b) Explain Reliability Centered Maintenance (RCM). **[9]**



Total No. of Questions : 8]

SEAT No. :

P-6743

[Total No. of Pages : 2

[6181]-325

B.E. (Production Engineering) (Sandwich)

INDUSTRIAL RELATIONS & HUMAN RESOURCE MANAGEMENT

(2019 Pattern) (Semester - VIII) (411134C) (Elective - V)

Time : 2½ Hours] *[Max. Marks : 70*

Instructions to the candidates :

1) ***Solve Q.1 or Q.2, Q.3 or Q.4, Q.5 or Q.6, Q.7 or Q.8.***
2) ***Figures to the right indicate full marks.***
3) ***Neat diagram must be drawn wherever necessary.***
4) ***Use of logarithmic table, slide rule is electronic pocket calculator is allowed.***
5) ***Assume suitable data if necessary.***

Q1) a) What are the Promotions policy follow in Industry? **[8]**

b) What Recruitment and selection process follow in IT Industry? **[9]**

OR

Q2) a) Enlist and brief Main resources of recruitment. **[8]**

b) Write note on Job Enrichment and Job Rotation. **[9]**

Q3) a) What parameters involved in Training Process? **[9]**

b) Explain Methodology follow in Training Process. **[9]**

OR

Q4) a) Explain the Need and objectives of training process. **[9]**

b) Describe Evaluation of Training Programmes. **[9]**

Q5) a) Why it is necessary to follow Ethics in appraisal system? **[9]**

b) Explain in brief Concepts of Performance Management. **[9]**

OR

P.T.O.

Q6) a) What are the Different methods of Performance Appraisal? **[9]**

b) What is Rating Errors? Brief with example. **[9]**

Q7) a) What are the main reasons of Voluntary Retirement? Does this helpful to Industry? Explain why? **[9]**

b) What are the main aspects responsible for Layoffs? What will be the solution to overcome this issue? **[8]**

OR

Q8) a) Write note on Industrial Democracy and Industrial Peace. **[9]**

b) What is the Role of HRD in developing Industrial Relations? **[8]**

▽▽▽▽

Total No. of Questions : 8]

SEAT No. :

P-8686

[Total No. of Pages : 2

[6181]-326

B.E. (Production Sandwich Engineering)

MARKETING MANAGEMENT

(2019 Pattern) (Semester - VIII) (411134D) (Elective - V)

Time : 2½ Hours] ***[Max. Marks : 70***

Instructions to the candidates :

1) ***Answer Q.1 or Q.2, Q.3 or Q.4, Q.5 or Q.6, Q.7 or Q.8.***
2) ***Neat diagram must be drawn wherever necessary.***
3) ***Figures to the right indicate full marks.***
4) ***Assume suitable data. if necessary and mention it clearly.***
5) ***Use of non-programmable calculator is allowed.***

Q1) a) What is the process of gathering information about the market? **[8]**

b) What are the 4 types of market segmentation? What is target market segmentation and positioning model? **[9]**

OR

Q2) a) Explain formulating marketing strategies. **[9]**

b) Explain planning marketing programmes. **[8]**

Q3) a) What new products are in development? What are the 7 steps to developing a product? **[8]**

b) What are the 4 types of marketing intermediaries? **[9]**

OR

Q4) a) Explain Developing new products. **[8]**

b) Explain managing market logistics. **[9]**

Q5) a) What is territory management in Salesforce? What are different sales territories? **[9]**

b) What are the 7 P's of service marketing? Why is service marketing important? **[9]**

OR

P.T.O.

Q6) a) Explain designing and managing product promotions. **[9]**

b) Explain Managing sales force and sales territories. **[9]**

Q7) a) What is the importance of marketing information and research? **[9]**

b) What is the scope of marketing research? What are the 7 types of marketing research? **[9]**

OR

Q8) a) Explain role of quantitative techniques. **[9]**

b) Explain Marketing research and its importance. **[9]**

▽▽▽▽

Total No. of Questions : 8]

SEAT No. :

P-6744

[Total No. of Pages : 2

[6181]-331

B.E. (Civil) (Honors)

ARCHITECTURE & TOWN PLANNING

Traffic and Transportation Planning

(2019 Pattern) (Semester - VII) (401401)

Time : 2½ Hours] ***[Max. Marks : 70***

Instructions to the candidates:

1) ***Answer Q.1 or Q.2, Q.3 or Q.4, Q.5 or Q.6 and Q.7 or Q.8.***
2) ***Figures to the right indicate full marks.***
3) ***Neat diagrams must be drawn wherever necessary.***
4) ***Assume suitable data if required.***
5) ***Use of non programmable scientific calculator is allowed.***

Q1) a) Write a note on hierarchy of roads. Explain in detail what are the design criteria for the same. **[6]**

b) Explain norms and standards for on street and off street parking. **[6]**

c) Write a note on public transport and its importance in today's context. **[5]**

OR

Q2) a) Describe in detail the Overtaking Sight Distance. **[6]**

b) What are the pedestrian design considerations at-grade and grade separated facilities. **[6]**

c) Explain in detail concept of Para-transit and how it plays important role in today's context. **[5]**

Q3) a) What are the different types of road intersection? Elaborate any one with proper sketch. **[6]**

b) What facilities are provided at Passenger terminals? **[6]**

c) Which issues consider under road safety management and Also explain the various activities conducted by Government of India for road safety. **[5]**

P.T.O.

OR

Q4) a) Enlist the components of at grade intersection and explain importance of at grade intersection. **[6]**

b) What is logistics management and how it is affect on urban transportation. **[6]**

c) Draw the neat sketch of rotary intersection and show all the design elements in it. Also explain any two design elements of it. **[5]**

Q5) a) Write a note on : Salient features of Nagpur 20 year road plan. **[6]**

b) What is the purpose of Land Use Model? Explain Lowry Model. **[6]**

c) Enlist urban system components and mention issues normally observed in India. **[6]**

OR

Q6) a) Write a note on: Salient features of Bombay 20 year road plan. **[6]**

b) Write a note on urban spatial structure and its influence on transport linkages. **[6]**

c) Explain Lowry - Garin Model. **[6]**

Q7) a) Elaborate urban transport problems in India. **[6]**

b) Write a note on BRTS. **[6]**

c) Elaborate : Transportation System Management (TSM) process. **[6]**

OR

Q8) a) Explain the need and components of sustainable urban transportation. **[6]**

b) Write a note on Metro rail by mentioning names of case studies. **[6]**

c) Elaborate different special aspects in case of sea shore cities in transportation planning. **[6]**

Total No. of Questions : 10]

SEAT No. : ____

P-6745

[Total No. of Pages : 2

[6181]-332

B.E. (Civil) (Honors in Metro Construction)

WORK METHOD STATEMENT MAKING

(2019 Pattern) (Semester - VII) (401301)

Time : 2½ Hours] ***[Max. Marks : 70***

Instructions to the candidates:

1) ***Attempt Q.1 or Q. 2, Q.3 or Q.4, Q.5 or Q.6, Q.7 or Q.8 and. Q.9 or Q.10***
2) ***Neat diagram must be drawn wherever necessary.***
3) ***Figures to the right indicate full marks.***
4) ***Assume suitable data, if necessary and clearly state.***
5) ***Use of cell phone is prohibited in the examination hall.***
6) ***Use of electronic pocket calculator is allowed.***

Q1) Explain in Method Statement Segment Casting at Casting Yard for metro projects. **[14]**

OR

Q2) Explain General Safety measures while excavation. **[14]**

Q3) Explain Method Statement for Vertical Bearing Installation in metro projects. **[14]**

OR

Q4) Write Method statement for Open Foundation in case of metro projects. **[14]**

Q5) Role of Quality Assurance Manager in case of metro projects. **[14]**

OR

Q6) Explain in brief Method Statement for Road Widening Work in metro projects. **[14]**

P.T.O.

Q7) Explain Sequence of Work for construction of Concourse Pier arm Platform Pier arm with integrated pier cap & portal beams. **[14]**

OR

Q8) Explain in brief Method Statement for Open Foundation. **[14]**

Q9) Explain in brief for Underslung Segment Launcher erection of Ground Supported Staging System. **[14]**

OR

Q10) Write a Method Statement for Load Testing of Launching Girder. **[14]**

⌘⌘⌘

Total No. of Questions : 8]

SEAT No. :

P-8788

[Total No. of Pages : 2

[6181]-333

B.E. (Honors in advanced Packaging Technology) (Printing Technology)

SUSTAINABLE PACKAGING

(2019 Pattern) (Semester - VII) (408214)

Time : 2½ Hours] *[Max. Marks : 70*

Instructions to the candidates:

1) ***Attempt Q.No.1 or Q.No.2, Q.No.3 or Q.No.4, Q.No.5 or Q.No.6, Q.No.7 or Q.No. 8.***
2) ***Figures to the right indicate full marks.***
3) ***Assume suitable data, if necessary.***
4) ***Neat diagrams must be drawn wherever necessary.***

Q1) a) What is design for safety explain in brief? **[10]**

b) What is sustainable food packaging? **[7]**

OR

Q2) a) What is edible packaging. **[10]**

b) State the importance of corporate images and brand management. **[7]**

Q3) a) What is Life Cycle Analyses? **[9]**

b) What are the Key Concepts and Terminolog of circular economy? **[9]**

OR

Q4) a) Explain the Stages in the lifecycle of product / service or activity. **[9]**

b) Explain 3R's of Circular Economy. **[9]**

Q5) What are the Phases and Processes of LCA. **[17]**

OR

P.T.O.

Q6) a) Which life Cycle Assessment Tools are used in packaging industry. **[10]**

b) Explain Carbon Footprint Assessment. **[7]**

Q7) a) Explain the concept of Marketing Strategy for sustainability. **[9]**

b) Explain the Environmental Claim for sustainable packaging. **[9]**

OR

Q8) a) Explain why Understanding and Engagement with Stakeholders is required for marketing strategy? **[9]**

b) Which ISO standards are used in sustainable packaging industry. **[9]**

⌘⌘⌘

Total No. of Questions : 8]

SEAT No. :

P-6746

[Total No. of Pages : 2

[6181]-334

B.E. (Honors)

SMART CONTRACTS & CRYPTOCURRENCY

Block Chain Technology

(2019 Pattern) (Semester - VII) (404181)

Time : 2½ Hours] ***[Max. Marks : 70***

Instructions to the candidates:

1) ***Answer any one question out of Q1 or Q2, Q3 or Q4, Q5 or Q6, Q7 or Q8.***
2) ***Neat diagrams must be drawn wherever necessary.***
3) ***Figures to the right indicate full marks.***
4) ***Assume suitable data if necessary.***

Q1) a) What are distributed ledgers? How distributed Ledgers Work? **[8]**

b) What is Ethereum? How does it work? What is difference between Ethercum and Bitcoin. **[9]**

OR

Q2) a) Define following terms : **[8]**

i) Vulnerability ii) Attacks

iii) Sidechain iv) Namecoin

b) Explain the smart contract and its working in detail. **[9]**

Q3) a) Explain Impact of Cryptocurrency on global Economy with benefits and Hurdles. **[9]**

b) Explain Decentralized Autonomous Organization (DAO) in Block chain in following terms. **[9]**

What is DAO and its need.

How do DAOs work?

How to use DAO?

OR

P.T.O.

Q4) a) Discuss the detailed Roots of Bitcoin along with legal aspects of Crypto Currency Exchange. **[9]**

b) Explain block chain based medical records. What are Pros and Cons? How it is seuse? **[9]**

Q5) a) Explain what is bitcoin, its working and limitation in detail. **[8]**

b) Write a short note on following terms : **[9]**

i) Digital Signature

ii) Digital Keys

iii) Private Keys

OR

Q6) a) Explain Bitcoin dients and APIs in detail. What are its usage. **[8]**

b) Explain working of bitcoin transaction in detail. **[9]**

Q7) a) Explain how block chain will play role in Health Care Innovation? **[9]**

b) Explain IBM Block Chain in detail. **[9]**

OR

Q8) a) Explain the future of AI and block chain. **[9]**

b) Explain various investment management platforms of block chain in detail. **[9]**



Total No. of Questions : 8]

SEAT No. :

P6747

[Total No. of Pages : 2

[6181] - 335

B.E. (Electronics and Telecommunication) (Honors in Robotics)
INDUSTRIAL ROBOTICS AND AUTOMATION
(2019 Pattern) (Semester - VII) (404181 HR)

Time : 2 ½ Hours] ***[Max. Marks : 70***

Instructions to the candidates:

1) ***Answer Q.1 or Q.2, Q.3 or Q.4, Q.5 or Q.6, Q.7 or Q.8.***
2) ***Draw neat diagrams wherever necessary.***
3) ***Figures to the right indicate full marks.***
4) ***All questions carry equal marks.***
5) ***Assume suitable data if necessary.***

Q1) a) Define pneumatic Actuators, how they are classified. Explain Rotary actuators with neat diagram. **[9]**

b) Explain air treatment stages and pressure regulation method with neat diagram. **[8]**

OR

Q2) a) How pneumatic compressors are classified. Explain positive displacement compressors with neat diagram. **[9]**

b) Explain basic components of pneumatic system with neat diagram. **[8]**

Q3) a) How to perform the analysis of an assembly. Explain with a suitable example. **[9]**

b) Write steps to design of parts for high speed feeding and orienting. State different feeding difficulties. **[9]**

OR

Q4) a) State design features of CNC systems. Explain drive system for CNC machine tools. **[9]**

b) Explain in detail how high speed automation Insertion is possible in robotic assembly. State general rules for product design and automation. **[9]**

P.T.O.

Q5) a) What are the stages in mechatronics design. Explain different phases of mechatronics design process. **[8]**

b) Write a case study on Engine management system. Compare Traditional and mechatronics design. **[9]**

OR

Q6) a) Prepare a detailed case studies on a pick and place robot. Write algorithm for a pick and place robot. **[9]**

b) Define Mechatronics. Explain basic elements of mechatronics system with neat sketches. **[8]**

Q7) a) Compare electrical, Mechanical and Hydraulic transmission systems. **[6]**

b) What is back pressure? When it arise and how to avoid it? **[6]**

c) Draw neat diagram to achieve Forward and Reverse stroke using cylinder and piston mechanism. **[6]**

OR

Q8) a) Give classification of hydraulic pumps. Explain positive displacement pumps and its characteristics. **[6]**

b) Give comparison between hydraulic and pneumatic system. What are the applications of hydraulic systems. **[6]**

c) Draw and explain basic components of hydraulic system? **[6]**

❄ ❄ ❄

Total No. of Questions : 8]

SEAT No. : [ ]

P6748

[Total No. of Pages : 2

[6181] - 336

B.E. (Mechanical) (Honors)

ADDITIVE MANUFACTURING SYSTEM DESIGN

(2019 Pattern) (Semester - VII) (3D Printing Honors Course)

(402014 MJ)

Time : 2 ½ Hours] ***[Max. Marks : 70***

Instructions to the candidates:

1) ***Answer Q1 or Q2, Q3 or Q4, Q5 or Q6, Q7 or Q8.***
2) ***Draw suitable neat diagrams, whenever necessary.***
3) ***Figure to the right indicate full marks.***
4) ***Assume suitable data if required.***

Q1) a) Explain Mechanical wheel or screw powder feeder with it's schematic figure and working & advantages. **[10]**

b) Explain: **[8]**

i) Carbonyl Reactions

ii) Electrolysis

OR

Q2) a) What is Atomization? Types of Atomization & Explain Centrifugal Atomization with neat sketch. **[10]**

b) Explain Melt spinning process with its figure, working and benefits. **[8]**

Q3) a) What is the powder feed system? Explain it's types in short note. **[10]**

b) Explain the relation of bed heating to warpage of print. **[7]**

OR

Q4) a) Write in detail about Powder delivery nozzles and it's types with diagram. **[10]**

b) Explain: **[7]**

i) Inert gas cooling system

ii) Gas recirculating system

P.T.O.

Q5) a) Explain: **[10]**

i) X-axis calibration

ii) Y-axis calibration

iii) Z-axis calibration.

b) What are the filament settings? How to determine the correct temperature of filament? **[8]**

OR

Q6) a) Explain in detail Preparation and setup of 3D printer before calibration. **[10]**

b) Differentiate between: Single printing and Multi-printing mode. **[8]**

Q7) a) What are the common faults and trouble shooting in 3D Printing system? **[10]**

b) What are different ASM/ASTM Standards for Additive Manufacturing system and explain it's significance. **[7]**

OR

Q8) a) Explain quality monitoring and inspection in Additive manufacturing system. **[10]**

b) What is the Sensor? Explain the types of Sensors used in 3D Printer. **[7]**

❄ ❄ ❄

Total No. of Questions : 8]

SEAT No. : ____

P6749

[Total No. of Pages : 2

[6181] - 337

B.E. (Mechanical/ Automobile) (Honors)
MODELLING AND SIMULATION OF EHV
(2019 Pattern) (Semester - VII) (402034MJ)

Time : 2 ½ Hours] ***[Max. Marks : 70***

Instructions to the candidates:

1) ***Solve Q.No.1 or Q.No.2, Q.No.3 or Q.No.4, Q.No.5 or Q.No.6, Q.No.7 or Q.No.8.***
2) ***Figures to the right indicate full marks.***
3) ***Draw the neat sketch wherever necessary.***

Q1) a) Explain A Motor Control Unit in electric vehicle with its functional features? **[4]**

b) Explain the following concepts related to modes of BMS control, **[8]**

i) Centralized BMS Architecture

ii) Modular BMS Topology

iii) Primary/Subordinate BMS

iv) Distributed BMS Architecture

c) What is Battery/Cell Control System in EV? Explain with its functions and working principal? **[8]**

OR

Q2) a) Explain Torque and speed coupling in electric vehicle? **[4]**

b) Explain following motor Control methods (any three) **[8]**

i) Phase flux linkage

ii) Phase Inductance

iii) Modulated Signal Injection

iv) Mutually Induced Voltage

v) Observer based Theory

c) Explain the importance of Sensor Management and Integration for electric vehicle with functional and application point of view? **[8]**

P.T.O.

Q3) a) Explain, " Placement of Motors" in electric vehicle system? **[8]**

b) Explain the important feature of following (any four), **[8]**

i) Unicycle

ii) Bicycle

iii) Dicycle

iv) Tricycle

v) Qudracycle

OR

Q4) a) Explain , "Battery and Motion Transmission Systems" in electric vehicle system? **[8]**

b) Explain Propulsion and Power distribution system in electric vehicle with its main components? **[8]**

Q5) a) Explain Design and repair tips for frame of vehicles? **[8]**

b) Explain the types and components of battery pack in electric vehicle? **[8]**

OR

Q6) a) Explain the types of chassis on basis of following. **[8]**

i) Engine Location

ii) Assembly

iii) Frame

b) Explain the following parameters related to vehicle dynamics in detail. **[8]**

i) Aerodynamic drag

ii) Aerodynamic lift

iii) Side force

iv) Rolling movement

Q7) a) List out the feature of Electric Vehicle Dashboard considering suitable example of 2W/3W/4W. **[8]**

b) What do you mean by ergonomics and aesthetics aspects of ev? Explain in detail with important features? **[10]**

OR

Q8) a) Explain Noise Factors & Failure Modes in electric vehicle? **[10]**

b) Explain the important features of FMEA analysis in electric vehicle? **[8]**

❄ ❄ ❄

Total No. of Questions : 8]

SEAT No. :

P6750

[Total No. of Pages : 2

[6181] - 338

B.E. (Mechanical) (Honors)
ELECTRICAL ENERGY SYSTEMS
(2019 Pattern) (Semester - VII) (402024MJ)

Time : 2 ½ Hours] ***[Max. Marks : 70***

Instructions to the candidates:

1) ***Attempt Q.1 or Q.2, Q.3 or Q.4, Q.5 or Q.6, Q.7 or Q.8.***
2) ***Neat diagrams must be drawn wherever necessary.***
3) ***Figures to the right indicate full marks.***
4) ***Assume suitable data wherever necessary and mention the same clearly.***

Q1) a) Classify air compressors. Discuss performance parameters of air compressors. **[10]**

b) Define Volumetric efficiency of compressor. Discuss parameters on which it depends. **[8]**

OR

Q2) a) Discuss energy efficiency opportunities in compressed air system. **[10]**

b) Explain compressed air system with its components. **[8]**

Q3) a) Discuss energy saving opportunities in air conditioning systems. **[10]**

b) What is function of cooling tower? What are the components of the cooling tower? **[7]**

OR

Q4) a) Explain Li-Br Vapour absorption Refrigeration system with schematic diagram. **[10]**

b) Explain psychrometric chart with all property lines. **[7]**

P.T.O.

Q5) a) How do you assess the performance of fans? Explain. **[10]**

b) Discuss energy conservation opportunities in a pumping system. **[8]**

OR

Q6) a) What are the different types of pumps? Explain working Reciprocating pump. **[10]**

b) Discuss different capacity control methods for the fans. **[8]**

Q7) a) What is a lamp and describe briefly the most commonly used lamps? **[10]**

b) Discuss the working of Diesel Generating set with its main components. **[7]**

OR

Q8) a) Explain energy efficient lighting controls. **[10]**

b) Discuss energy conservation measures possible in lighting system. **[7]**

❄ ❄ ❄

Total No. of Questions : 8]

SEAT No. : ____

P6751

[Total No. of Pages : 2

[6181] - 339

B.E. (Mechanical Engineering)(Honors)
SYSTEM MODELLING AND SIMULATION
(2019 Pattern) (Semester - VII) (402044)

Time : 2 ½ Hours] ***[Max. Marks : 70***

Instructions to the candidates:

1) ***Solve Q.1 or Q.2, Q.3 or Q.4, Q.5 or Q.6, Q.7 or Q.8.***
2) ***Assume suitable data if necessary.***
3) ***Neat diagram must be drawn wherever necessary.***
4) ***Figures to the right indicate full marks.***

Q1) a) Give an illustration of the 1-Port resistor elememt with an example. **[9]**

b) Describe the 2-Port component using an example. **[9]**

OR

Q2) a) With an example, describe the 1-Port capacitor component. **[9]**

b) Explain the 3-Port junction elements with an example. **[9]**

Q3) a) Briefly describe the steps involved in creating a circuit. **[9]**

b) Give a brief description of the Fixed- Axis Rotation Construction Procedure. **[8]**

OR

Q4) a) Briefly describe the Mechanical Translation Construction Procedure. **[8]**

b) Give an explanation of the concept of fluid resistance. **[9]**

P.T.O.

Q5) a) Give an example of the fundamental causality attribution process and explain. **[9]**

b) Describe the fundamental formulation and reduction technique for the equation system. **[9]**

OR

Q6) a) Desccribe system equations' standard form. **[9]**

b) Justify nonlinear simulation briefly. **[9]**

Q7) a) Describe the Solution technique for solving ordinary differential equations. **[8]**

b) Give an example to illustrate the second-order system. **[9]**

OR

Q8) a) Give an illustration of the first-order system. **[8]**

b) Describe the steps involved in getting the free response. **[9]**

❄ ❄ ❄

Total No. of Questions : 8]

SEAT No. :

P6752

[Total No. of Pages : 2

[6181] - 340

B.E. (Honours in Artificial Intelligence & Machine Learning)
MACHINE LEARNING
(2019 Pattern) (Semester - VII) (410301)

Time : 2 ½ Hours] ***[Max. Marks : 70***

Instructions to the candidates:

1) ***Answer Q.1 or Q.2, Q.3 or Q.4, Q.5 or Q.6, Q.7 or Q.8.***
2) ***Neat diagrams must be drawn wherever necessary.***
3) ***Use of logarithmic tables slide rule mollier charts electronic pocket calculator steam tables allowed.***
4) ***Assume suitable data if necessary.***

Q1) a) What is random Forest? Explain following w.r.t random forest. **[8]**

i) Bias

ii) Variance

b) State and explain different types of kernel functions in SVM? **[9]**

OR

Q2) a) Define SVM and explain SVM as a Penalization Method in detail. **[9]**

b) What is random Forest? Write an algorithm for random forest. **[8]**

Q3) a) Explain Bayesian View of Learning and Dimensionality Reduction neural network. **[9]**

b) How to train a perceptron? State the reasons while perceptron training why instances are given one by one instead of whole samples. **[9]**

OR

Q4) a) What are two paradigms for Parallel Processing of neural network. State the scenario when to use which type of paradigm. **[9]**

b) Draw and explain, Bayesian network with suitable example. **[9]**

P.T.O.

Q5) a) Using K-means clustering algorithm, cluster following data into two cluster. {2, 4, 10, 12, 3, 20, 30, 11, 15} Explain each step in detail. **[9]**

b) A database has five transactions. min sup=40% and confidence=40%. **[8]**

TID	Items Bought
T1	A,B,C
T2	A,B,C,D.E
T3	A,C,D
T4	A,C,D,E
T5	A,B,C,D

Find all frequent itemsets using Apriori algorithm.

OR

Q6) a) Write short note on: **[8]**

i) Self-Organizing Maps

ii) PCA-Spectral Clustering

b) What is hierarchical clustering? Explain two strategies for hierarchical clustering in detail. **[9]**

Q7) a) Why is naive Bayesian classification called “naive”? Explain naive Bayesian classification algorithm in detail. **[9]**

b) What is regression? Explain Linear regression with example. **[9]**

OR

Q8) a) What is regression and state its applications. Find linear regression equation for the following two sets of data: **[9]**

X	2	4	6	8
Y	3	7	5	10

b) Explain finding state sequence and model selection in HMM detail. **[9]**

❄ ❄ ❄

Total No. of Questions : 8]

SEAT No. : ____

P6753

[Total No. of Pages : 2

[6181] - 341

B.E. (Cyber Security - Honours)
INTERNET OF THINGS & EMBEDDED SECURITY
(2019 Pattern) (Semester - VII) (410401)

Time : 2 ½ Hours] ***[Max. Marks : 70***

Instructions to the candidates:

1) ***Attempt Q1 or Q2, Q3 or Q4, Q5 or Q6, Q7 or Q8***
2) ***Figures to the right indicate full marks.***
3) ***Neat diagram must be drawn whenever necessary.***
4) ***Assume suitable data if necessary.***

Q1) a) Describe IoT security CONOPS document, Network and security integration? **[8]**

b) Explain in details system security verification and validation (V&V) model. **[9]**

OR

Q2) a) Explain the secure IoT system implementation life cycle. **[8]**

b) Describe attribute based access control mechanism for IoT? **[9]**

Q3) a) Describe cryptographic module principals for IoT? **[9]**

b) Describe cryptographic controls built into IoT messaging protocols? **[9]**

OR

Q4) a) Describe the following. **[9]**

i) Key derivation

ii) Key lifetime

b) Describe cryptographic control in Zigbee protocol. **[9]**

P.T.O.

Q5) a) Explain IEEE 1609.2? **[8]**

b) Explain identity life cycle with suitable diagram. **[9]**

OR

Q6) a) Explain IoT IAM infrastructure 802-1 X? **[8]**

b) Discuss authorization & access control for IoT? **[9]**

Q7) a) Explain global web identity management for IoT? **[9]**

b) Describe local identity management model for IoT? **[9]**

OR

Q8) a) Explain network identity model for IoT? **[9]**

b) Describe Identity Portrayal? **[9]**

❄ ❄ ❄

Total No. of Questions : 8]

SEAT No. : ____

P6754

[Total No. of Pages : 2

[6181] - 342

B.E. (Computer Engineering) (Honours in Data Science)
MACHINE LEARNING AND DATA SCIENCE
(2019 Pattern) (Semester - VII) (410501)

Time : 2 ½ Hours] ***[Max. Marks : 70***

Instructions to the candidates:

1) ***Answer Q.1 or Q.2, Q.3 or Q.4, Q.5 or Q.6, Q.7 or Q.8.***
2) ***Neat diagrams must be drawn wherever necessary.***
3) ***Figures to the right indicate full marks.***
4) ***Assume suitable data if necessary.***

Q1) a) Explain kNN algorithm with an example. **[6]**

b) For what type of data, Density-Based Spatial Clustering is suitable? Which parameters are required by DBSCAN algorithm? **[6]**

c) Cluster the following dataset using Agglomerative Hierarchical clustering technique - **[6]**

	Xl	X2
A	10	5
B	1	4
C	5	8
D	9	2
E	12	10
F	15	8
G	7	7

Also show intermediate steps.

OR

Q2) a) Explain K- Means algorithm with an example. **[6]**

b) What is the role of dendrogram in choosing number of clusters in hierarchical clustering? **[6]**

c) What do you mean by divisive clustering? Explain with an example. **[6]**

P.T.O.

Q3) a) Write a short note on Multilayer Perceptron. **[4]**

b) What are the types of artificial neural network? **[6]**

c) Explain back propagation algorithm. **[7]**

OR

Q4) a) Explain a biological neuron along with its parts. **[4]**

b) Explain the process of training a perceptron. **[6]**

c) How does the learning rate affect the training of the Neural Network? What do you mean by Hyperparameters? **[7]**

Q5) a) Explain CNN architecture along with diagram. **[6]**

b) Explain Recursive Neural Network. **[6]**

c) Enlist various types of Recurrent Neural Network. Explain any two of them. **[6]**

OR

Q6) a) Explain the terms "Valid Padding" and "Same Padding" in CNN. List down the hyperparameters of a Pooling Layer. **[6]**

b) Does the size of the feature map always reduce upon applying the filters? Explain why or why not. **[6]**

c) Enlist various types of CNN models. Explain any two of them. **[6]**

Q7) a) Explain the process of text processing. **[6]**

b) Explain feature selection and extraction. **[6]**

c) What do you mean by topic modelling? Explain Latent Dirich. Let Allocation. **[5]**

OR

Q8) a) What are various text similarity measures? Explain any two. **[6]**

b) Write short note on : **[6]**

i) Stemming

ii) Lemmatization

c) Illustrate tokenization with an example. **[5]**

❄ ❄ ❄

Total No. of Questions : 8]

SEAT No. :

P6755

[Total No. of Pages : 2

[6181] - 343

B.E. (Honours in Internet of Things)
MACHINE LEARNING FOR INTERNET OF THINGS
(2019 Pattern) (Semester - VII) (410601)

Time : 2 ½ Hours] ***[Max. Marks : 70***

Instructions to the candidates:

1) ***Q1 or Q2 and Q3 or Q4 and Q5 or Q6 and Q7 or Q8.***
2) ***Figures to the right indicate full marks.***
3) ***Neat diagram must be drawn whenever necessary.***
4) ***Assume suitable data if necessary.***

Q1) a) Explain Decision Tree, Support Vector Machines and K nearest neighbor for IoT applications. **[9]**

b) Explain Convolutional neural networks (CNNs), Recurrent neural networks (RNNs), Deep auto encoders (AEs) for IoT applications. **[9]**

OR

Q2) a) Explain Association Rule (AR) algorithms, Ensemble learning (EL), k- Means clustering. **[9]**

b) Explain Deep belief networks (DBNs), Generative adversarial networks (GANs), Ensemble of DL networks (EDLNs). **[9]**

Q3) a) Explain Edge Computing on IoT Devices & IoT Based Smart Buildings. **[9]**

b) Explain Least-Squares-Solver for Shallow Neural Network. **[8]**

OR

Q4) a) Explain Distributed Machine Learning and Machine Learning Accelerator. **[9]**

b) How optimizer works in neural network. **[8]**

P.T.O.

Q5) a) Explain A general framework of Deep Learning for Remote Sensing data analysis. **[9]**

b) Explain Real Time IoT Imaging with Deep Neural Network. **[9]**

OR

Q6) a) Explain Steps to build Deep Learning Algorithms on an Embedded Platform. **[9]**

b) Write short note on Deep Learning Models For Sensor Data. **[9]**

Q7) a) Explain various challenges and opportunities for Machine learning for IoT applications. **[9]**

b) Considering case study of Remote Patient Monitoring system, explain. how machine learning is used for optimization **[8]**

OR

Q8) a) Explain Application of Machine learning in IoT for agriculture and smart city. **[9]**

b) How to secure IoT application using Machine Learning. **[8]**

❄ ❄ ❄

Total No. of Questions : 8]

SEAT No. : ____

P6756

[Total No. of Pages : 2

[6181] - 344

B.E. (Computer Engineering) (Honors)
VIRTUAL REALITY FOR GAME DEVELOPMENT
(2019 Pattern) (Semester - VII) (410701)

Time : 2 ½ Hours] ***[Max. Marks : 70***

Instructions to the candidates:

1) ***Answer Q.No.1 or Q.No.2, Q.No.3 or Q.No.4, Q.No.5 or Q.No.6, Q.No.7 or Q.No.8.***
2) ***Neat diagrams must be drawn whenever necessary.***
3) ***Figures to the right indicate full marks.***

Q1) a) Draw and explain block diagram for a multimodal VR system with various software and hardware components. **[9]**

b) What is SMART stand for in define stage of iterative design. **[5]**

c) What different types of project constraints are in define stage? **[4]**

OR

Q2) a) Write short note on : **[9]**

i) Define Stage

ii) Make Stage

iii) Learn Stage

b) What different types of Project Constraints are in define stage of iterative design. **[5]**

c) Which are important factor during communication in learn stage. **[4]**

Q3) a) Explain working with Unity's UI System. **[6]**

b) Write short note on Fundamentals of sprite animation **[6]**

c) What are different unity 2D feature? **[5]**

OR

P.T.O.

Q4) a) State comparison between Unity and Unreal Engine. **[6]**

b) Describe different steps to develop town view using unity. **[6]**

c) Write note on: NPCs and Interactions. **[5]**

Q5) a) How to create a battle system in VR environment. **[9]**

b) Explain workflow of Mecanim Animation System. **[8]**

OR

Q6) a) State different pre-processor directives that Unity recognizes . **[9]**

b) How to building in-game menu structures. Explain. **[8]**

Q7) a) Explain system delays in VR systems with diagram. **[9]**

b) Explain the terms w.r.t. physical issues involved with the use of VR equipment. **[9]**

i) Physical fatigue

ii) Headset fit

iii) Injury, and

iv) Hygiene

OR

Q8) a) Explain in details different theories of motion sickness. **[9]**

b) State system factor that contributes to adverse effects. **[9]**

❄ ❄ ❄

Total No. of Questions : 8]

SEAT No. :

P6757

[Total No. of Pages : 2

[6181]-345
B.E. (Honors)
ARCHITECTURE AND TOWN PLANNING
Land Use and Land Cover
(2019 Pattern) (Semester - VII) (401403)

Time : 2½ Hours] *[Max. Marks : 70*

Instructions to the candidates:

1) ***Solve Q.1 or Q.2, Q.3 or Q.4, Q.5 or Q.6, Q.7 or Q.8.***
2) ***Figures to the right indicate full marks.***
3) ***Neat diagrams must be drawn wherever necessary.***
4) ***Assume suitable data if required.***
5) ***Use of non programmable scientific calculator is allowed.***

Q1) a) In the field of town planning, how to conduct socio economic survey? **[6]**

b) How to used GIS and for development of any area? **[6]**

c) What will be the impact of smart cities, green cities and sustainable cities on development towards sustainability. **[5]**

OR

Q2) a) What is the application of GIS and RS in Land use and Land cover sector. **[6]**

b) What planning parameters play important role while preparation of smart, green and sustainable cities. **[6]**

c) List out different types of survey and explain any one in detail. **[5]**

Q3) a) How tourism development zone increases the economy of region? **[6]**

b) What is the function and purpose of green belt. **[6]**

c) While planning of land use which norms and environmental aspects taking into consideration. **[5]**

OR

P.T.O.

Q4) a) Enlist different types of land use structure and explain any one in detail. **[6]**

b) What are the design criteria and requirement of residential zone? **[6]**

c) Explain different Traffic and Transportation system in town planning and its impact on urban area. **[5]**

Q5) a) How town planning principles changed the land development? **[6]**

b) Elaborate how URDPFI Guidelines is benefitted. **[6]**

c) How land development affect on environmental features? **[6]**

OR

Q6) a) Role of URDPFI guidelines in land use planning. **[6]**

b) How environmental aspects protect the natural resources, conservation of biodiversity? **[6]**

c) What are the objectives and principles of urban planning. **[6]**

Q7) a) Explain the concept of neighborhood planning, key elements and strategies for implementation. **[6]**

b) Explain the concept of Development Plan and How it is benefitted to end users. **[6]**

c) Explain in detail "National Land Utilization Policy" **[6]**

OR

Q8) a) Elaborate features of Maharashtra Land Revenue Code 1966. **[6]**

b) Explain in detail how TPS and NHP controlling haphazard growth of town. **[6]**

c) Write a short note on: New town and satellite town. **[6]**

Total No. of Questions : 8]

SEAT No. : ____

P6758

[Total No. of Pages : 2

[6181]-346
B.E. (Honors)
METRO CONSTRUCTION
Tunnel Engineering
(2019 Pattern) (Semester - VIII) (401303)

Time : 2½ Hours] ***[Max. Marks : 70***

Instructions to the candidates:

1) ***Solve Q.1 or Q.2, Q.3 or Q.4, Q.5 or Q.6, Q.7 or Q.8.***
2) ***Figures to the right indicate full marks.***
3) ***Draw neat figures wherever necessary.***
4) ***Assume suitable data if necessary.***

Q1) a) Write about the NATM method of tunneling. **[6]**

b) Explain about TBM operation. **[6]**

c) Explain about the TBM safety hazards. **[6]**

OR

Q2) a) Explain about the twin tunnel. **[6]**

b) Explain about types of rock pressure in tunnel construction. **[6]**

c) Explain about methods to deal with types of rock pressure in tunnel construction. **[6]**

Q3) a) Write about sources of dust in underground space. **[6]**

b) Explain about hazards effects of CO_2, CO, H_2S, NOx, CH_4, Radon gas in tunneling. **[6]**

c) Explain in detail about Metabolism and heat balance in the human body. **[5]**

OR

P.T.O.

Q4) a) Write about factors that need to be considered while selecting and designing a particular type of tunnel ventilation system. **[6]**

b) Explain about basic principles of air conditioning in tunnel. **[6]**

c) Explain about the forced ventilation system in the tunnel construction. **[5]**

Q5) a) Write about earth pressure balanced shields. **[6]**

b) Explain about slime shields method of tunneling. **[6]**

c) Explain the open shield and close shield method of tunneling. **[6]**

OR

Q6) a) Explain about large and deep caverns. **[6]**

b) Explain about maintenance in the tunnel. **[6]**

c) Explain about emergency lighting in the tunnel. **[6]**

Q7) a) Explain about Occupational Safety and Health Administration (OSHA) standards. **[6]**

b) Explain about safety checklist. **[6]**

c) Explain in detail about Micro-tunnelling. **[5]**

OR

Q8) a) Explain about safety survey and safety inspections. **[6]**

b) Explain fire prevention and protection in the tunnel. **[6]**

c) Explain about lung problems associated with the worker in the tunnel. **[5]**

Total No. of Questions : 8]

SEAT No. :

P6759

[Total No. of Pages : 2

[6181]-348
B.E. (Honors)
BLOCKCHAIN SOLUTIONS
(2019 Pattern) (Semester - VIII) (404183 HBCT)

Time : 2½ Hours] *[Max. Marks : 70*

Instructions to the candidates:

1) ***Solve Q.1 or Q.2, Q.3 or Q.4, Q.5 or Q.6, Q.7 or Q.8.***
2) ***Neat diagrams must be drawn wherever necessary.***
3) ***Figures to the right side indicate full marks.***
4) ***Use of calculator is allowed.***
5) ***Assume suitable data if necessary.***

Q1) a) What is directed acyclic graph (DAG) in block chain technology. Explain in detail. **[6]**

b) What is Hashcash. How it is connected to bitcoin? **[6]**

c) Describe the process of ethereum development as go ethereum. **[6]**

OR

Q2) a) Describe algorond working in detail. **[6]**

b) Describe the process of smart contract in blockchain. **[6]**

c) Explain puzzle mining concept with example. **[6]**

Q3) a) Explain pseudo-anonymity & anonymity in detail. **[6]**

b) By giving example, describe selfish mining threat in blockchain. **[6]**

c) Compare Zcash & Zk-SNARKS in blockchain attacks. **[6]**

OR

P.T.O.

Q4) a) Explain: sybil attack in detail. **[6]**

b) Describe sharding based consensus algorithm in blockchain. **[6]**

c) What is need of Zcash. Describe its features. **[6]**

Q5) a) Describe the features of healthcare recording of measurements with IoT & blockchain together. **[6]**

b) Describe scope of blockchain for processing of any Government scheme with example. **[6]**

c) "Blockchain for confidentiality & data integrity" describe with example. **[6]**

OR

Q6) a) "Blockchain can be a good plat form for building smart cities in India" Justify. **[6]**

b) Describe: Blockchain in finance security. **[6]**

c) How blockchain can avail transperancy in transactions & reduction of frauds. **[6]**

Q7) a) Describe "Blockchain & Bitcoin are same" myth or reality. **[6]**

b) Compare myths & reality of blockchain with example. **[6]**

c) Describe the possible limitations of blockchain in education sector. **[4]**

OR

Q8) a) Describe any three myths Vs Reality cases of Blockchain technology. **[6]**

b) Justify "Business needs Blockchain" Myth or Reality. **[4]**

c) Enlist the flaws of blockchain technology. **[6]**

Total No. of Questions : 8]

SEAT No. : ____

P6760

[Total No. of Pages : 2

[6181]-349
B.E. (Honors)
ARTIFICIAL INTELLIGENCE IN ROBOTICS
(2019 Course) (Semester - VIII) (404183 HR)

Time : 2½ Hours] ***[Max. Marks : 70***

Instructions to the candidates:

1) ***Solve Q.1 or Q.2, Q.3 or Q.4, Q.5 or Q.6, Q.7 or Q.8.***
2) ***Figures to the right indicate full marks.***
3) ***Figures to the right side indicate full marks.***
4) ***Use of calculator is allowed.***
5) ***Assume suitable data if required.***

Q1) a) Explain Hill climbing algorithm. Explain Local maxima, Global Maxima and Plateau. **[8]**

b) Differentiate between uninformed and informed search methods. **[5]**

c) Explain best first search with suitable example. **[5]**

OR

Q2) a) Enlist and explain two examples of ant colony optimization. **[8]**

b) What is the difference between heuristic and metaheuristic? **[5]**

c) Why are real-coded genetic algorithms necessary? **[5]**

Q3) a) Describe any one algorithm for image edge detection and image segmentation with advantages. **[7]**

b) What is imaging based automatic sorting? **[5]**

c) Explain the two objects recognition technique used in industries. **[5]**

OR

P.T.O.

Q4) a) Explain the segmentation methods used in vision system with suitable example. **[7]**

b) Write a note on the applications of a machine vision system. **[5]**

c) What is imaging based automatic inspection? **[5]**

Q5) a) What are the applications of intelligent systems for mobile Robot Motion Planning. **[8]**

b) Explain path planning robot control in dynamic environments. **[5]**

c) Explain any one application of intelligent robot. **[5]**

OR

Q6) a) How to avoid obstacles using intelligent robotic systems. **[8]**

b) How intelligent robot maintain accurate motion. **[5]**

c) Enlist advantages and limitations of intelligent robot. **[5]**

Q7) a) Explain the role of artificial intelligence in flexible automation. **[7]**

b) Comment on how robotics can be used to design intelligent vehicles. **[5]**

c) How real time scheduling is done using AI. **[5]**

OR

Q8) a) Explain route optimization for AS/RS systems. **[7]**

b) Comment on the fundamental problem in robotics. **[5]**

c) Explain the process of resolution with proper example. **[5]**

Total No. of Questions : 8]

SEAT No. :

P-6761

[Total No. of Pages : 2

[6181]-350

B.E. (Automobile and Mechanical Engineering) (Honors)

3D PRINTING APPLICATION AND ENTREPRENEURSHIP

(2019 Pattern) (Semester - VIII) (402016MJ)

Time : 2½ Hours] ***[Max. Marks : 70***

Instructions to the candidates:

1) ***Solve Q.1 OR Q.2, Q.3 OR Q.4, Q.5 OR Q.6, Q.7 OR Q.8.***
2) ***Neat sketches/diagrams must be drawn wherever necessary.***
3) ***Figures to the right indicate full marks for the sub-questions.***
4) ***Assume suitable data if necessary and state them in your answer clearly.***
5) ***Use non-programmable pocket size electronic calculator is allowed.***

Q1) a) What do you meant by Bio-degradable materials & explain its mechanical properties with application? **[10]**

b) What are the functional, manufacturing & commercial requirements of Health-care? **[7]**

OR

Q2) a) Write a short note on :

i) Inkjet printing **[5]**

ii) Photolithography **[5]**

b) Explain in detail the challenges & limitation of AM in Bio-medical & Health-care application? **[7]**

Q3) a) Explain in brief design flexibility & operational productivity and their requirements? **[10]**

b) State the application of 3D printing in eye wares, sporting goods & footwear? **[8]**

OR

P.T.O.

Q4) a) What are the application of 3D printing in foods & beverages processing, make-up and toiletries? **[9]**

b) What is the principle of social manufacturing? What are the manufacturing & Commercial requirements of consumer product application? **[9]**

Q5) a) Define Aesthetics & Ergonomics? Explain the art to part concept? **[10]**

b) State the application of 3D printing in Archeology, Art, Landscaping field? **[7]**

OR

Q6) a) What are the advantages, disadvantages & challenges of AM in creative art expression? **[9]**

b) Write short on lost wax casting & mold making? **[8]**

Q7) a) How rapid prototyping process evaluation based on quality, quantity & aesthetics? **[9]**

b) Differentiate between conventional & integrated design approach? Explain product & process planning? **[9]**

OR

Q8) a) Explain in detail DFMO & DFMA? **[10]**

b) What is the current approach of manufacturing enterprises? What types of product and employment opportunities are there? **[8]**

Total No. of Questions : 8]

SEAT No. :

P-6762

[Total No. of Pages : 2

[6181]-351

B.E. (Honors) (Electric Vehicle)

E-VEHICLE STANDARDS, CHARGING AND SAFETY

(2019 Pattern) (Semester - VIII) (302036MJ)

Time : 2½ Hours] *[Max. Marks : 70*

Instructions to the candidates:

1) ***Answer Q1 or Q2, Q3 or Q4, Q5 or Q6, Q7 or Q8.***
2) ***Neat diagrams must be drawn wherever necessary.***
3) ***Figures to the right side indicate full marks.***
4) ***Use of Calculator is allowed.***
5) ***Assume Suitable data if necessary.***

Q1) a) Describe different types of battery charging methods for electric vehicles. **[9]**

b) Write a note on Electric Vehicle Charging and grid integration standards. **[8]**

OR

Q2) a) Explain Control and communication infrastructure in EV charging. **[9]**

b) Describe EV integration in the power grid. What is the role of aggregator in EV. **[8]**

Q3) a) Explain Specific Requirements for L and M Category Electric Power Train Vehicles, also note any two related terms. **[9]**

b) What are electrical and mechanical test procedures for safety requirements of traction batteries. **[9]**

OR

Q4) a) Describe Testing procedures for EV batteries in brief. **[9]**

b) Write a note on future trends in battery testing. **[9]**

P.T.O.

Q5) a) Elaborate the concept of, "Battery Pack and Module Safety". **[9]**

b) List and explain in short Common causes of battery failure. **[8]**

OR

Q6) a) Write a note on : **[9]**

i) Calorimetry

ii) Electrochemical and Thermal Characterization of batteries

b) Describe evaluation techniques for batteries and battery materials. **[8]**

Q7) a) Write a note on domestic charging infrastructure and Public charging infrastructure. **[9]**

b) Explain : **[9]**

i) Battery Swapping of Electric Vehicle

ii) Power Ratings of Electric Vehicle.

OR

Q8) a) What are main responsibilities of Charge Point Operator(CPO)? **[9]**

b) Explain planning steps of location planning and land allocation for EV charging infrastructure. **[9]**

⌘⌘⌘

Total No. of Questions : 8]

SEAT No. :

P-6763

[Total No. of Pages : 2

[6181]-352

B.E. (Mechanical)

SUSTAINABLE ENERGY CONVERSION SYSTEMS

Honors in Energy Management in Utility Systems

(2019 Pattern) (Semester - VIII) (402026MJ)

Time : 2½ Hours] *[Max. Marks : 70*

Instructions to the candidates:

1) ***Answer Q1 or Q2, Q3 or Q4, Q5 or Q6 and Q7 or Q8.***
2) ***Neat diagrams must be drawn wherever necessary.***
3) ***Figures to the right side indicate full marks.***
4) ***Use of electronic pocket calculator is allowed.***
5) ***Assume suitable data, if necessary.***

Q1) a) Define Wind Energy? Explain its Parameters. **[5]**

b) How does wind power generate electricity? **[6]**

c) Difference between Vertical Axis and Horizontal Axis Wind turbine. **[6]**

OR

Q2) a) How does a wind turbine produce electricity? **[5]**

b) Difference between Up Wind and Down Wind Process. **[6]**

c) Define Hybrid wind energy system? Explain any one. **[6]**

Q3) a) Briefly explain Sources of energy generation. **[5]**

b) Define Biogas production? Explain any one. **[6]**

c) What is Gasification? Types of gasifiers, Explain any one. **[7]**

OR

Q4) a) Briefly explain Industrial waste and agro residues. **[5]**

b) Write down any Five Utilization and advantages of briquetting. **[6]**

c) Write Environment benefits of biochemical and thermo-chemical conversion. **[7]**

P.T.O.

Q5) a) Brief note on Need and importance of Energy storage. **[5]**

b) Difference Between Conventional and Nonconventional Energy System. **[6]**

c) Briefly explain Techno Commercial Analysis. **[6]**

OR

Q6) a) Briefly Explain Conventional Energy System. **[5]**

b) What are the Various forms of Energy Storage? Explain any one. **[6]**

c) Types of Nonconventional Energy System. Explain any one. **[6]**

Q7) a) Write a short note on Occupancy sensor. **[5]**

b) Explain the variables of Automatic power factor controllers. **[6]**

c) Short note on : **[7]**

i) Electronic ballast

ii) Energy efficient lighting controls

OR

Q8) a) Write a short note on controllers. **[5]**

b) Explain IOT and its application for chiller system. **[6]**

c) Write short note on Energy saving potential of each technology. **[7]**

Total No. of Questions : 8]

SEAT No. :

P-6764

[Total No. of Pages : 2

[6181]-353
B.E. (Honors)
SYSTEMS ENGINEERING MANAGEMENT
(2019 Pattern) (Semester - VIII) (302046 MJ)

Time : 2½ Hours] ***[Max. Marks : 70***

Instructions to the candidates :

1) ***Answer Q.1 or Q.2, Q.3 or Q.4, Q.5 or Q.6, Q.7 or Q.8.***
2) ***Neat diagrams must be drawn wherever necessary.***
3) ***Figures to the right side indicate full marks.***
4) ***Use of calculator is allowed.***
5) ***Assume suitable data if necessary.***

Q1) a) Explain the steps of the Risk Management Process. **[6]**

b) What are the 5 stages of information management? **[6]**

c) What are the steps used to Analyse risk? **[4]**

OR

Q2) a) What are the steps of risk profile? **[6]**

b) Describe risk monitoring with suitable example? **[6]**

c) Why is treat risk important? **[4]**

Q3) a) What are the activities of configuration status accounting? **[6]**

b) What are the activities in configuration identification? **[6]**

c) What are the elements of evaluation in project management? **[6]**

OR

Q4) a) What are the steps in the change and configuration management process? **[6]**

b) What is a configuration management plan? **[6]**

c) What is configuration management in change management? **[6]**

P.T.O.

Q5) a) How to do modeling measurements? **[6]**

b) Explain the importance of project management measurement? **[6]**

c) How do you measure project performance? **[6]**

OR

Q6) a) Why is project management measurement important? **[6]**

b) Explain the ways to measure progress of activities in a project? **[6]**

c) What is the measurement plan in project development process? **[6]**

Q7) a) What is the quality assurance system in engineering? **[6]**

b) What are the quality engineering activities and process? **[6]**

c) What are the principles of quality assurance? **[6]**

OR

Q8) a) What is threat and incident management? **[6]**

b) Explain the process to maintain records and reports in project management? **[6]**

c) What are the elements of quality assurance system? **[6]**

▽▽▽▽

Total No. of Questions : 8]

SEAT No. :

P-6765

[Total No. of Pages : 2

[6181]-354

B.E. (Honours)

SOFT COMPUTING AND DEEP LEARNING

(2019 Pattern) (Semester - VIII) (410303)

Time : 2½ Hours] ***[Max. Marks : 70***

Instructions to the candidates :

1) ***Answer Q.1 or Q.2, Q.3 or Q.4, Q.5 or Q.6, Q.7 or Q.8.***
2) ***Neat diagrams must be drawn wherever necessary.***
3) ***Figures to the right indicate full marks.***

Q1) a) What is Mutation in Genetic Algorithm? Explain with examples. **[6]**

b) Write note on Evolving Neural Networks with example. **[6]**

c) Explain: **[6]**

i) Single point crossover

ii) Fitness Function in details.

OR

Q2) a) Describe Genetic Algorithm Requirements. **[6]**

b) Elaborate Roulette Wheel's Selection algorithm in Genetic Algorithm. **[6]**

c) List the applications of Genetic Algorithms with explanation of one use case. **[6]**

Q3) a) How is Brain different from Computers? Explain with suitable diagrams. **[6]**

b) What is Perceptron ? And write detailed note on Multi-Layer Perceptron. **[5]**

c) What is Backpropagation? How Backpropagation Algorithm Works. **[6]**

OR

P.T.O.

Q4) a) Explain the Model of Artificial Neural Network with suitable diagram. **[6]**

b) Elaborate the Types of Learning in Neural Network. **[5]**

c) Explain the working principle of recurrent network. **[6]**

Q5) a) Describe the challenges of Deep Learning. **[6]**

b) Explain the role of classification in deep learning. **[6]**

c) Write detailed note on Recurrent Neural Network (RNN). **[6]**

OR

Q6) a) Explain any one real time application of Deep Learning. **[6]**

b) Elaborate the working principle of Binary Classifier in NeuralNetworks. **[6]**

c) Describe the Long-Short Term Memory (LSTM) algorithm with appropriate diagram. **[6]**

Q7) a) Explain ReLU (Rectified Linear Unit) Activation Function. **[6]**

b) Distinguish between Machine Learning and Deep Learning. **[5]**

c) List the applications of Deep Learning and explain any one application in details. **[6]**

OR

Q8) a) Explain the steps involved in teaching a computer to distinguish cats from dogs. **[6]**

b) Describe Saturating Gradient Problem with example. **[5]**

c) List the applications of ANN and RNN and explain each of the one application in details. **[6]**



Total No. of Questions : 8]

SEAT No. :

P-6766

[Total No. of Pages : 2

[6181]-355

B.E. (Computer)

Honors in Cyber Security

INFORMATION SYSTEM MANAGEMENT

(2019 Pattern) (Semester - VIII) (410403)

Time : 2½ Hours] ***[Max. Marks : 70***

Instructions to the candidates:

1) ***Answer Q1 or Q2, Q3 or Q4, Q5 or Q6, Q7 or Q8.***
2) ***Neat diagrams must be drawn wherever necessary.***
3) ***Draw neat figures wherever necessary.***
4) ***Figures to the right indicate full marks.***
5) ***Use of Calculator is allowed.***
6) ***Assume Suitable data if necessary.***

Q1) a) What is IT infrastructure and what are its components? **[9]**

b) How Does Knowledge Management Enhance the Process of Decision-Making? **[9]**

OR

Q2) a) What are the stages and technology drivers of IT infrastructure evolution? **[9]**

b) What are the major types of knowledge management systems explain in brief? **[9]**

Q3) a) What are the challenges of managing IT infrastructure and management solutions? **[9]**

b) Explore types of knowledge management systems. **[8]**

OR

Q4) a) What are the current trends in computer hardware platforms? **[8]**

b) Explain Knowledge work system. **[9]**

P.T.O.

Q5) a) Write Short Note on : **[8]**

i) Building Management System

ii) Project management

b) What is block chain? Explain key elements of block chain? **[9]**

OR

Q6) a) What is management information system? What are the five components of management information system? **[9]**

b) Write short note on : **[8]**

i) Mobile Security

ii) Levels of Physical Security

Q7) a) What is automated decision-making? Why is automated decision-making important? **[9]**

b) Write short note on. **[9]**

i) Tools of Information Security

ii) Password Security

OR

Q8) a) What is controlling in risk management? What are the five strategies for controlling risk in risk management? **[9]**

b) What is bitcoin? Enlist & explain features of bitcoin with its benefits in brief. **[9]**

Total No. of Questions : 8]

SEAT No. :

P8651

[Total No. of Pages : 2

[6181] - 356

B.E. (Computer Engineering) (Honours in Data Science)
ARTIFICIAL INTELLIGENCE FOR BIG DATA ANALYTICS
(2019 Pattern) (Semester - VIII) (410503)

Time : 2 ½ Hours] *[Max. Marks : 70*

Instructions to the candidates:

1) ***Answer Q.l or Q.2, Q.3 or Q.4, Q.5 or Q.6, Q.7 or Q8.***
2) ***Neat diagrams must be drawn whenever necessary.***
3) ***Figures to the right indicate full marks.***
4) ***Assume suitable data if necessary.***

Q1) a) Draw the Structure of a simple ANN and Explain. **[6]**

b) Draw and explain the backpropagation model. **[6]**

c) What is the meaning of model overfitting and explain in detail. **[8]**

OR

Q2) a) What are linear models and nonlinearity models. **[6]**

b) Explain the relationship between back propagation and gradient descent. **[6]**

c) Give Mathematical representation on simple perceptron model. **[8]**

Q3) a) What are the components of the Hadoop ecosystem? **[4]**

b) What ate the features of Hadoop ecosystem? **[6]**

c) Draw and explain the Hadoop architecture? **[8]**

OR

Q4) a) What is the difference between PySpark and Hadoop? **[4]**

b) What is PySpark? explain features of PySpark. **[6]**

c) What is HDFS explain the architecture of HDFS. **[8]**

P.T.O.

Q5) a) What are the different data minig applications. **[6]**

b) What is data mining and explain its process. **[6]**

c) What are the characteristics of Data Warehouse. **[4]**

OR

Q6) a) Explain types and benefits of data ingestion. **[6]**

b) Explain Scalable Machine Learning on Big Data using Spark. **[6]**

c) Write a note on Data analysis using Hive. **[4]**

Q7) a) What is Computer Vision? How does Computes Vision Work? **[6]**

b) List and explain the applications of NLP. **[6]**

c) Explain NLP application as Sentiment Analysis. **[4]**

OR

Q8) a) Explain the applications of computer vision. **[6]**

b) Explain in details Text pre-processing of NLP. **[6]**

c) Write advantages and disadvantage of natural language processing. **[4]**

❄ ❄ ❄

Total No. of Questions : 8]

SEAT No. :

P-6767

[Total No. of Pages : 2

[6181]-357

B.E. (Honors)

INTERNET OF THINGS SECURITY

(2019 Pattern) (Semester - VIII) (410603)

Time : 2½ Hours] *[Max. Marks : 70*

Instructions to the candidates:

1) ***Answer Q1 or Q2, Q3 or Q4, Q5 or Q6, Q7 or Q8.***
2) ***Neat diagrams must be drawn wherever necessary.***
3) ***Figures to the right side indicate full marks.***
4) ***Assume Suitable data if necessary.***

Q1) a) Explain in detail - use of digital signatures in IoT. **[6]**

b) Define Public-Key-Based Authentication? Explain with suitable example. **[6]**

c) Explain - lightweight cryptography for IoT. **[5]**

OR

Q2) a) What is Identity-Based Authentication? Explain with suitable example. **[6]**

b) Explain privacy preservation for the IoT environment. **[6]**

c) What is IP Connectivity? Explain with example necessity of IP Connectivity. **[5]**

Q3) a) Explain the data life cycle in IoT, with suitable example. **[6]**

b How can we protect data in IoT? Which parameters are used to protect the data in IoT? **[6]**

c) How can IoT security be provided for the machine learning applications? **[6]**

OR

P.T.O.

Q4) a) How can security be provided in the Service Layer IoT Architecture? **[6]**

b) What are the Cross-Layer Threats Caused in Maintenance of IoT? **[6]**

c) How can security be provided in the Application Interface Layer of IoT Architecture? **[6]**

Q5) a) How to provide Security in Integration of Wireless sensor network and RFID? Explain with suitable example. **[6]**

b) List and explain main potential attacks in 6LoWPAN. Discuss security protocols and privacy issues in 6LoWPAN. **[5]**

c) How Data Confidentiality and Security applicable for IoT based Healthcare. **[6]**

OR

Q6) a) What are the security attacks in WSNs? How to avoid them? **[6]**

b) What are the threats and challenges to achieve security in the - identification and tracking technologies of the IoT Environment. **[5]**

c) How do you maintain security in Service Management? **[6]**

Q7) a) How can security be provided in Smart Cities? **[6]**

b) What can be the security threats to the Connected Cars? How can security be provided to Connected Cars? **[6]**

c) How can Blockchain Technology be used in the Security and Privacy in IoT? **[6]**

OR

Q8) a) Describe in detail challenges associated with secure IoT Deployment. **[6]**

b) Comment on "Blockchain in IoT". **[6]**

c) Briefly discuss the case study on "Food supply chain traceability system". **[6]**

⌘⌘⌘

Total No. of Questions : 8]

SEAT No. :

P-6768

[Total No. of Pages : 2

[6181]-358

B.E. (Computer Engineering) (Honors)

APPLICATION DEVELOPMENT USING AUGMENTED REALITY AND VIRTUAL REALITY

(2019 Pattern) (Semester - VIII) (410703)

Time : 2½ Hours] *[Max. Marks : 70*

Instructions to the candidates:

1) ***Answers Q.1 or Q.2, Q.3 or Q.4, Q.5 or Q.6, Q.7 or Q.8.***
2) ***Neat diagrams must be drawn wherever necessary.***
3) ***Figures to the right side indicate full marks.***
4) ***Assume suitable data if necessary.***

Q1) a) Explain Simultaneous Localization and Mapping. **[8]**

b) Write a note on AR tool kit. **[5]**

c) How physics affects output of augmented reality? Which library is used for adding physics effects? **[5]**

OR

Q2) a) In reference to AR SLAM explain uncertain spatial relationships. **[6]**

b) What is Raycasting? What are the parameters of the Raycasting and physics for AR? **[6]**

c) Write a short note on Vuforia. **[6]**

Q3) a) What is container in Unreal Engine? Explain 3 containers used in Unreal Engine. **[8]**

b) Write syntax used for defining **[9]**

i) Classes

ii) Functions

iii) Variables

OR

P.T.O.

Q4) a) What is unreal engine? What makes it useful for AR-VR? **[5]**

b) Explain features of C# that makes use of C# for AR and VR comfortable. **[9]**

c) Explain with example if else structures with unreal engine. **[3]**

Q5) a) What are the important components of VR system. Explain different types of VR systems. **[9]**

b) Advantages and Disadvantages of AR and VR technologies with respect to Exercise and Virtual Museums. **[8]**

OR

Q6) a) What are the important components of AR system. Explain different types of AR systems. **[9]**

b) Write a note on Optical See-Through HMD, Virtual retinal systems. **[8]**

Q7) a) Write a short note on Applications of VR. **[9]**

b) With respect to example explain how AR-VR is used in Telerobotic and Telepresence. **[9]**

OR

Q8) a) Write a note on use of AR-VR in Health and Medicine. **[8]**

b) How legal and human aspects can be handled in AR-VR. **[6]**

c) Explain limitations of virtual reality application. **[4]**

Total No. of Questions : 8]

SEAT No. :

P6375

[Total No. of Pages : 2

[6181]-361

B.E. (Artificial Intelligence & Machine Learning)

INFORMATION RETRIEVAL IN AI

(2019 Pattern) (Semester-VII) (418541)

Time : 2½ Hours] *[Max. Marks : 70*

Instructions to the candidates:

1) ***Answer Q.1 or Q.2, Q.3 or Q.4, Q.5 or Q.6, Q.7 or Q.8.***
2) ***Neat diagrams must be drawn wherever necessary.***
3) ***Figures to the right indicate full marks.***
4) ***Assume suitable data, if necessary.***

Q1) a) What do you understand by interface support for search process? Explain with example. **[9]**

b) What are the different starting points? **[9]**

OR

Q2) a) Write a short note on: **[9]**

i) Precision and Recall

ii) Evaluation of information retrieval system

b) Explain in detail MRR, F-Score and NDCG parameters with examples.**[9]**

Q3) a) Explain Distributed Information Retrieval. **[8]**

b) Explain one dimensional time series with example **[9]**

OR

Q4) a) Explain collection partitioning & source selection with respect to distributed information retrieval system. **[8]**

b) Write a short notes on MULTOS and GEMINI approach. **[9]**

P.T.O.

Q5) a) Explain Challenges involved in searching web. **[9]**

b) What are Meta searchers? Explain with suitable example. **[9]**

OR

Q6) a) Discuss the centralized architecture of search engine. Also discuss drawbacks of harvest distributed architecture. **[9]**

b) What is importance of Ranking in information retrieval. Explain any one ranking algorithm. **[9]**

Q7) a) State the difference between simple search and Metasearch with examples. **[9]**

b) Explain with block diagram working of Metasearch. **[8]**

OR

Q8) a) What is need and significance of Metasearch in information retrieval in Al systems. **[9]**

b) Write different examples of metasearch engines. **[8]**



Total No. of Questions : 8]

SEAT No. :

P6769

[Total No. of Pages : 2

[6181]-362

B.E. (Artificial Intelligence and Machine Learning)

CLOUD COMPUTING

(2019 Pattern) (Semester - VII) (418542)

Time : 2½ Hours] *[Max. Marks : 70*

Instructions to the candidates:

1) ***Answer Q.1 or Q.2, Q.3 or Q.4, Q.5 or Q.6, Q.7 or Q.8.***
2) ***Neat diagrams must be drawn wherever necessary.***
3) ***Figures to the right indicate full marks.***
4) ***Assume suitable data if necessary.***

Q1) a) Enlist the advantages of "Infrastructure as A Service" (IaaS)? Support your answer with a suitable diagram and example. **[9]**

b) Explain Microsoft Azure Services with supporting examples. **[8]**

OR

Q2) a) Enlist the advantages of "Software as A Service" (SaaS)? Support your answer with a suitable diagram and example. **[9]**

b) Narrate the situations wherein the following cloud services will be helpful. **[8]**

i) Amazon - Amazon Elastic Compute Cloud (EC2)

ii) Amazon Simple Storage Service (S3)

Q3) a) Explain the architecture of Google File System (GFS) and write a situation where in the use of GFS is suitable in IT Industry. **[6]**

b) What is Hadoop Distributed File System? Elaborate it with a diagram. **[6]**

c) Differentiate between Hbase and Dynamo file System. **[6]**

OR

P.T.O.

Q4) a) List the major cloud storage providers and devise their pros and cons. **[6]**

b) Write short notes on Data store and Simple DB. **[6]**

c) Describe virtual storage containers along with their advantages and disadvantages. **[6]**

Q5) a) Enlist the cloud security mechanism and explain any two of them in detail along with examples. **[6]**

b) Discuss hashing in cloud computing in detail. **[5]**

c) Explain the following : **[6]**

i) Encryption in cloud security

ii) Identity Access Management (IAM) in cloud security.

OR

Q6) a) Describe potential threats and vulnerability in cloud security. **[6]**

b) Explain Single Sign On (SSO) in detail. **[5]**

c) Write a short note on the following with reference to cloud security: **[6]**

i) Integrity

ii) authenticity

iii) Risks

Q7) a) Describe Docker workflow with suitable examples. **[5]**

b) Write notes on : **[5]**

i) SAML OAuth

ii) SSL/TLS

c) Explain Open Cloud Consortium with help of Open Virtualization Format. **[8]**

OR

Q8) a) Write notes on : **[5]**

i) Process Simplification

ii) Broad Support and adoption

b) Explain common standards for security in cloud computing. **[5]**

c) Explain the standard messaging protocol used in cloud computing. **[8]**

Total No. of Questions : 8]

SEAT No. :

P6770

[Total No. of Pages : 2

[6181]-363

B.E. (Artificial Intelligence and Machine Learning)

DEEP LEARNING FOR AI

(2019 Pattern) (Semester - VII) (418543)

Time : 2½ Hours] *[Max. Marks : 70*

Instructions to the candidates:

1) ***Answer Q.1 or Q.2, Q.3 or Q.4, Q.5 or Q.6, Q.7 or Q. 8***
2) ***Assume suitable data, if necessary.***
3) ***Neat diagrams must be drawn wherever necessary.***
4) ***Figures to the right indicate full marks.***

Q1) a) Compare the Difference Between a Feedforward Neural Network and Recurrent Neural Network? **[6]**

b) Interpret how LSTM proves efficient over RNN? **[6]**

c) Explain exploding gradient descent problem for RNN. **[6]**

OR

Q2) a) Explain working of LSTM in details. **[10]**

b) What are the applications of a Recurrent Neural Network (RNN)? Also explain which type of RNN it belongs to. **[8]**

Q3) a) What are the applications of autoencoders? **[10]**

b) Explain sparse autoencoders. **[7]**

OR

Q4) a) What is a hyperparameter? Explain different hyperparameters that must be set before training. **[8]**

b) Explain denoising autoencoders in detail. **[9]**

Q5) a) When will you use transfer learning? Explain with examples. **[6]**

b) Draw Densenet architecture. **[6]**

c) Explain distributed representation? **[6]**

OR

P.T.O.

Q6) a) Explain domain adaptation. **[6]**

b) What are the advantages of Densenet? **[6]**

c) Why is the network called a Greedy Layer wise pretraining network? **[6]**

Q7) a) Explain GAN with example. Describe all its variants. **[10]**

b) Explain generative and discriminative models in GANs. **[7]**

OR

Q8) a) What are the advantages and disadvantages of the GAN model? **[10]**

b) Write a note on IMAGEN **[7]**



Total No. of Questions : 8]

SEAT No. :

P-8688

[Total No. of Pages : 2

[6181]-364

B.E. (Artificial Intelligence & Machine Learning)

QUANTUM COMPUTING

(2019 Pattern) (Semester - VII) (418544A) (Elective - III)

Time : 2½ Hours] *[Max. Marks : 70*

Instructions to the candidates:

1) ***Answer Q1 or Q2, Q3 or Q4, Q5 or Q6, Q7 or Q8.***
2) ***Neat diagrams must be drawn wherever necessary.***
3) ***Figures to the right indicate full marks.***
4) ***Assume suitable data, if necessary.***

Q1) a) What is quantum circuit? Explain various quantum gates included in it. **[9]**

b) List and explain four qubit operations. **[8]**

OR

Q2) a) Explain Grover's algorithm for quantum computing. **[9]**

b) Explain two level unitary gates. **[8]**

Q3) a) What is Discrete Fourier Transform (DFT)? Explain DFT formula. **[9]**

b) What is Fast Fourier Transform (FFT)? What is it used for? Explain its advantages. **[9]**

OR

Q4) a) What is Quantum Fourier Transform? Explain mathematical representations of Fourier Transform. **[9]**

b) Explain Shore's Factorization Algorithm. **[9]**

Q5) a) Explain general applications of Quantum Fourier Transform. **[9]**

b) Explain order finding application of Quantum Fourier Transform. **[9]**

P.T.O.

OR

Q6) a) Explain properties of Quantum Fourier Transform. **[9]**

b) Explain period finding applications of Quantum Fourier Transform. **[9]**

Q7) a) What is Quantum Neural Networks? Explain in detail. **[8]**

b) Explain application of Quantum Machine Learning of swarm robotics. **[9]**

OR

Q8) a) Explain application of Quantum Machine Learning for finance related problems. **[9]**

b) How does Quantum Cryptography work? What is it used for? **[8]**



Total No. of Questions : 8]

SEAT No. :

P-7832

[Total No. of Pages : 2

[6181]-365

B.E. (AI & ML)

BLOCKCHAIN TECHNOLOGY

(2019 Pattern) (Semester - VII) (Elective - III) (418544B)

Time : 2½ Hours] *[Max. Marks : 70*

Instructions to the candidates:

1) ***Attempt Q1 or Q2, Q3 or Q4, Q5 or Q6, Q7 or Q8.***
2) ***Neat diagrams must be drawn wherever necessary.***
3) ***Figures to the right side indicate marks.***
4) ***Assume suitable data, if necessary.***

Q1) a) List down different tools in Ethereum Ecosystem along with their purpose and use. **[9]**

b) Explain following datatypes in Solidity programming with example. **[9]**

i) Enum

ii) Mapping

iii) Address

OR

Q2) a) What is wallet? Make use of MyEtherwallet example to explain the Ethereum Account concept. **[9]**

b) Organise elements of Ethereum tool stack as per their application. **[9]**

Q3) a) Identify distinguishing features of Hyperledger fabric over traditional blockchain. **[8]**

b) Prepare list of different components of Hyperledger fabric with is significance. **[9]**

OR

Q4) a) Set up a fabric network with two organizations. **[8]**

b) Differentiate between the Ethereum and Hyperledger platforms. **[9]**

P.T.O.

Q5) a) Differentiate between : **[8]**

- Fungible Token vs. Non-Fungible Token
- Cardano (ADA) vs. Riiple (XRP)

b) Explain in detail types of Cryptocurrecies and Tokens. **[6]**

c) Describe features of Tokens. **[4]**

OR

Q6) a) Describe the Consensus mechanism in brief. **[7]**

b) Explain the Proof of Activity consensus algorithm. **[5]**

c) Write a short note on i) Proof of Work ii) Proof of Activity **[6]**

Q7) a) What are the main features of a blockchain platform? **[8]**

b) What is the role of the blockchain platform in the business? **[9]**

OR

Q8) a) Short Note : **[8]**

i) Ransomware

ii) Money Laundering

b) What determines the adoption rate of a specific blockchain technology? **[4]**

c) What are the benefits of Blockchain in various scenarios? **[5]**

Total No. of Questions : 8]

SEAT No. :

P7842

[Total No. of Pages : 2

[6181]-366

B.E. (Artificial Intelligence and Machine Learning)

AI IN DRONES

(2019 Pattern) (Semester-VII) (418544 C) (Elective-III)

Time : 2½ Hours] *[Max. Marks : 70*

Instructions to the candidates:

1) ***Answer Q1 or Q2, Q3 or Q4, Q5 or Q6, Q7 or Q8.***
2) ***Neat diagrams must be drawn wherever necessary.***
3) ***Figures to the right side indicate full marks.***
4) ***Assume suitable data if necessary.***

Q1) a) What is Payload? Describe its types and their importance in drone. **[9]**

b) What are the communication methods used by drones? **[9]**

OR

Q2) a) What are the concepts of kinematics and dynamics in drone? **[9]**

b) Illustrate the different categories of antenna. **[9]**

Q3) a) What is Global Positioning System? Describe with appropriate example. **[9]**

b) Explain inertial navigation in detail. **[8]**

OR

Q4) a) Describe the waypoint navigation with appropriate example. **[8]**

b) What is path planning in drone? How does path planning work? **[9]**

Q5) a) What is flight control in drone? Explain in detail. **[9]**

b) Describe the use of transmitter and receiver in a drone? **[9]**

OR

P.T.O.

Q6) a) Describe the different types of electronic speed controllers? **[9]**

b) Describe the different types of flight controllers? **[9]**

Q7) a) What do you mean by aerial photography? Explain with example. **[9]**

b) Describe survey and mapping using drone. **[8]**

OR

Q8) a) What are the applications of drones in precision agriculture? **[9]**

b) Illustrate the use of drone for building inspection? **[8]**



Total No. of Questions : 8]

SEAT No. : [ ]

P8652

[Total No. of Pages : 2

[6181] - 367

B.E. (Artificial Intelligence & Machine Learning)
ETHICAL HACKING & CYBER FORENSICS
(2019 Pattern) (Semester - VII) (Elective - IV) (418545 A)

Time : 2 ½ Hours] ***[Max. Marks : 70***

Instructions to the candidates:

1) ***Answer Question 1 or 2, 3 or 4, 5 or 6 and 7 or 8.***
2) ***Neat diagrams must be drawn whenever necessary.***
3) ***Figures to the right indicate full marks.***
4) ***Assume suitable data if necessary.***

Q1) a) Explain Metaspoint with Reconnaissance example. **[9]**

b) How to dentify E-Mail with malicious attachements with example. **[9]**

OR

Q2) a) Explain compromising windows host with meatasploit in details. **[9]**

b) Describe different Social engineering toolkit and password cracking tools. **[9]**

Q3) a) What are the different web attacks and Vulnerabilities. **[9]**

b) Explore stenography techniques for hiding information? **[8]**

OR

Q4) a) List and Explain wireless network vulnerabilities. **[9]**

b) Describe Crystallographic attacks and Counter measures. **[8]**

Q5) a) How to collect and Analyze digital evidence in Forensics. **[9]**

b) Define Digital forensics and explain forensics Analysis techniques. **[9]**

OR

P.T.O.

Q6) a) What are different network forensics tools and analyze network based attack. **[9]**

b) Describe mobile device forensics procedures. **[9]**

Q7) a) Short note on **[9]**

i) Cloud based digital forensics

ii) Internet of things(IoT) forensics

b) Describe legal and regulatory aspects of Ethical Hacking. **[8]**

OR

Q8) a) Investigate different ethical guideline with examples. **[9]**

b) Identify and explain forensics analysis of three Social media application. **[8]**

❄ ❄ ❄

Total No. of Questions : 8]

SEAT No. :

P7843

[Total No. of Pages : 2

[6181]-368

B.E. (Artificial Intelligence and Machine Learing)

AUGMENTED REALITY AND VIRTUAL REALITY

(2019 Pattern) (Semester-VII) (Elective-IV) (418545 B)

Time : 2½ Hours] *[Max. Marks : 70*

Instructions to the candidates:

1) ***Answers Q.1 or Q.2, Q.3 or Q.4, Q.5 or Q.6, Q.7 or Q.8.***
2) ***Neat diagrams must be drawn wherever necessary.***
3) ***Figures to the right side indicate full marks.***
4) ***Assume suitable data, if necessary.***

Q1) a) Explain concept of perception of depth with suitable diagrams. **[9]**

b) Explain the process for Combining Sources of Information for visual rendering. **[8]**

OR

Q2) a) Explain how concepts of Ray Tracing and Shading differs with suitable applications and eg.? **[8]**

b) What is tracking? Explain 3D tracking system. **[9]**

Q3) a) Enlist various components of Augmented Reality. Differentiate between Augmented Reality and Virtual Reality. **[8]**

b) What is Augmented Reality? What are the real-world applications of Augmented Reality? Explain any three applications in detail. **[9]**

OR

Q4) a) Describe historical developmental phases of Augmented Reality. **[9]**

b) Explain the concept of tracking taking place between rendering virtual contents and real contents. **[8]**

P.T.O.

Q5) a) Explain Haptic displays used in Augmented Reality Hardware. How they are different than Visual displays? **[9]**

b) Explain the requirements and characteristics for spatial display models. **[9]**

OR

Q6) a) Explain the role of processor and processor system architecture in Augmented Reality. **[9]**

b) Explain the process of calibration and registration. In what aspects both of them are different? **[9]**

Q7) a) Explain programming languages used for AR and VR App development. **[9]**

b) Explain applications of VR in Gaming and Entertainment. **[9]**

OR

Q8) Write short notes on (Any Three): **[18]**

a) VR application development using Unity.

b) Legal and social factors in AR application development.

c) Sensor Fusion.

d) Applications of AR and VR in Defense and Aerospace.



Total No. of Questions : 8]

SEAT No. :

P7844

[Total No. of Pages : 2

[6181]-369

B.E. (Artificial Intelligence and Machine Learning)

DEVOPS IN MACHINE LEARNING

(2019 Pattern) (Semester-VII) (Elective-IV) (418545 C)

Time : 2½ Hours] *[Max. Marks : 70*

Instructions to the candidates:

1) ***Answer Q.1 or Q.2, Q.3 or Q.4, Q.5 or Q.6, Q.7 or Q.8.***
2) ***Neat diagrams must be drawn wherever necessary.***
3) ***Figures to the right side indicate full marks.***
4) ***Assume suitable data if necessary.***

Q1) a) Define Continuous deployment. What are its benefits? Explain how continuous Deployment is different from Continuous Monitoring? **[9]**

b) What is Test Driven Deployment? Explain different steps involved in TDD? **[8]**

OR

Q2) a) Explain various deployment pipeline practices and Commit stage with suitable case studies. **[8]**

b) What is Behaviour Driven Development (BDD)? Explain different steps involved in BDD? How BDD is different than TDD? **[9]**

Q3) a) Differentiate between: **[8]**

i) Micro-services and containerization

ii) Orchestration and automation

b) Explain containerization using Dockers. **[9]**

OR

Q4) a) Explain Continuous integration with Jenkins. **[8]**

b) Explain Continuous deployment using Ansible. **[9]**

P.T.O.

Q5) a) Explain with suitable eg. solutions and Future trends in MLOPs. **[9]**

b) Enlist and explain various tools to create ML pipelines. **[9]**

OR

Q6) a) Explain MLOPs maturity model levels with suitable diagram/case study. **[9]**

b) Explain with suitable diagram components of MLOPs **[9]**

Q7) a) Explain the process of creating and deploying ML models with and without MLOPs. **[9]**

b) Explain with suitable case study how data quality and integrity is maintained in MLOPs. **[9]**

OR

Q8) Write short notes on (Any 3): **[18]**

a) JIRA

b) Different roles involved in MLOPs.

c) Git

d) Machine learning life cycle.



Total No. of Questions : 8]

SEAT No. :

P6771

[Total No. of Pages : 2

[6181]-371

B.E. (Automation and Robotics)

INDUSTRIAL AUTOMATION AND CONTROL SYSTEMS

(2019 Pattern) (Semester - VII) (402541) (Theory)

Time : 2½ Hours] *[Max. Marks : 70*

Instructions to the candidates:

1) ***Answer four questions from the following.***
2) ***Draw neat labeled diagrams wherever necessary.***
3) ***Figures to the right side indicate full marks.***
4) ***Use of non programmable electronic calculator is permitted.***
5) ***Assume Suitable/Standard data necessary.***

Q1) a) Explain the use of "AND" and "OR" logic gates in pneumatics with a neat sketch. **[10]**

b) Draw a neat sketch indicating the construction of pneumatic system and explain the functions of various components involved in it. **[8]**

OR

Q2) a) Explain the construction and working of sequencing pneumatic circuit with a neat sketch. **[8]**

b) Explain the function of Proportional-Derivative (PD) controller and Proportional- Integral (PI) controller with neat sketch. **[10]**

Q3) a) Describe the open Loop and closed loop control systems with the help of real time applications. **[10]**

b) Draw the signal flow graph and determine C/R for the block diagram shown in Fig. **[7]**

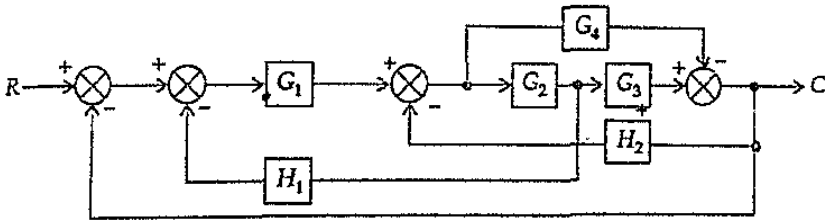

OR

P.T.O.

Q4) a) Explain the various components used in control system. Describe how these components are necessary in a robot control systems. **[10]**

b) Simplify the block diagram using block diagram reduction rules and calculate the transfer function. **[7]**

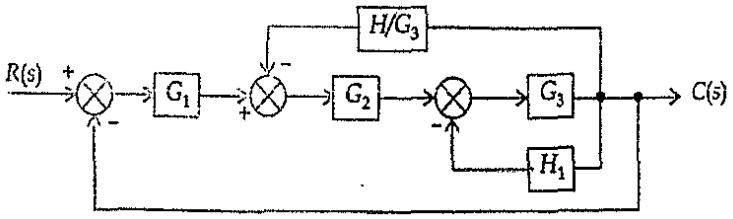

Q5) a) Derive the relation of relay function for stability analysis in non-linear systems. **[10]**

b) Define asymptotic stability and instability. Explain the singular points and give their classification. **[8]**

OR

Q6) a) Derive the relation of deadzone function for stability analysis in non-linear systems. **[9]**

b) Describe the functions of following non-linearities : relay, deadzone and saturation. **[9]**

Q7) a) Define SCADA and HMI. Give the differences between SCADA and HMI. **[8]**

b) Explain the various types of HMI. List their advantages. **[9]**

OR

Q8) a) Explain SCADA with neat block diagram and define each level involved in it. **[9]**

b) Explain the functions of HMI. Explain how the automation is beneficial in large scale control system. **[8]**

✪ ✪ ✪

Total No. of Questions : 8]

SEAT No. : ____

P6772

[Total No. of Pages : 2

[6181]-372

B.E. (Automaton and Robotics)

ROBOTIC PROCESS AUTOMATION & DEVELOPMENT

(2019 Pattern) (Semester-VII) (Theory) (End Sem) (402542)

Time : 2½ Hours] ***[Max. Marks : 70***

Instructions to the candidates:

1) ***Solve Q1 or Q.2, Q.3 or Q.4, Q.5 or Q.6, Q.7 or Q.8,***
2) ***Figures to the right side indicate full marks.***
3) ***Draw neat labeled diagrams wherever necessary.***
4) ***Use of non-programmable electronic calculator is permitted.***
5) ***Assume suitable/Standard data if necessary.***

Q1) a) What are some common data manipulation activities that RPA bots can perform in business automation? **[8]**

b) How can RPA be used to extract data from unstructured sources, such as emails or documents? **[9]**

OR

Q2) a) What are the key advantages of using RPA for data manipulation tasks compared to manual methods? **[8]**

b) Distinguish between Desktop and Web Recording. **[9]**

Q3) a) What are citrix recording methods in RPA, and when would you use each of them? **[9]**

b) Explain the concept of “Anchors” in the context of data extraction. How are they used in RPA processes? **[9]**

OR

Q4) a) Write a sequence of a project for extracting input data from a excel sheet which needs to be filled on a web portal of company. **[9]**

b) What are the primary benefits of incorporating AI and ML capabilities into RPA workflows? **[9]**

P.T.O.

Q5) a) Explain the different types of bots used in Robotic Process Automation (RPA). Provide a brief description of each type and highlight their specific functions and applications. **[8]**

b) Describe at least two common challenges associated with monitoring image triggers in RPA and provide potential solutions or best practices to mitigate these challenges? **[9]**

OR

Q6) a) Outline the best practices for effectively utilizing debugging tools to streamline RPA development processes? **[8]**

b) "Exceptions are a critical aspect of Robotic Process Automation (RPA) development. Discuss the role of exceptions in RPA, and provide examples of common exceptions that RPA developers encounter. **[9]**

Q7) a) Explain the steps involved in deploying RPA bots within an organization. Discuss how these steps ensure a smooth integration with existing systems and processes. **[9]**

b) Explain the concept of "Bot Orchestration" and how it Impacts the deployment of RPA bots in an enterprise. **[9]**

OR

Q8) a) What are the scalability challenges inRPA? How can an organization effectively scale its RPA bot deployent? **[9]**

b) What emerging technologies or trends are likely to impact the deployment and maintenance of RPA bots in the near future? Provide examples and potential implications. **[9]**



Total No. of Questions : 6]

SEAT No. :

P6773

[Total No. of Pages : 2

[6181]-373

B.E. (Automation and Robotics)

ARTIFICIAL NEURAL NETWORK AND DEEP LEARNING

(2019 Pattern) (End-Semester) (Semester - VII) (402543) (Theory)

Time : 2 Hours] *[Max. Marks : 50*

Instructions to the candidates:

1) *Answer four questions from the following.*
2) *Draw neat labeled diagrams wherever necessary.*
3) *Figures to the right side indicate full marks.*
4) *Use of non programmable electronic calculator is permitted.*
5) *Assume Suitable/Standard data if necessary.*

Q1) a) Describe the different activation functions used in neural network. **[8]**

b) Which deep learning model utilizes the back-propagation technique, and what are the learning methods associated with back propagation. **[8]**

OR

Q2) a) Write a comparison between Binary Neural Networks (BNN) and Artificial Neural Networks (ANN). **[8]**

b) Explain Gradient Decent Rules and Error correction. **[8]**

Q3) a) Explain the structure and functioning of Hopfield networks and what are the limitations of Hopfield networks. **[8]**

b) What is Learning Vector Quantization (LVQ), and how does it differ from other neural network training methods. **[9]**

OR

Q4) a) Compare and contrast the roles and characteristics of Artificial Neural Networks (ANN) in pattern association, pattern classification, and pattern mapping tasks. **[8]**

b) Compare and contrast the two basic feature mapping models used in Self Organization Maps (SOM). What are their main differences. **[9]**

P.T.O.

Q5) a) What is SoftMax regression, and how is it used in the output layer of a Convolution Neural Networks (CNN). **[8]**

b) Discuss the application of Artificial Neural Networks (ANN) in the recognition of consonant-vowel (CV) segments in speech signals. What are the key features used for this task. **[9]**

OR

Q6) a) What are residual networks, and how do they address the vanishing gradient problem in deep networks. **[8]**

b) Describe the Neocognitron architecture and its significance in the recognition of handwritten characters. **[9]**



Total No. of Questions : 8]

SEAT No. :

P6774

[Total No. of Pages : 2

[6181]-375

B.E. (Automation and Robotics)

MICROPROCESSORS AND MICROCONTROLLERS

(2019 Pattern) (Semester - VII) (Elective - III) (Theory) (402544B)

Time : 2½ Hours] *[Max. Marks : 70*

Instructions to the candidates:

1) *Answer four questions from the following.*
2) *Draw neat labeled diagrams wherever necessary.*
3) *Figures to the right side indicate full marks.*
4) *Use of non programmable electronic calculator is permitted.*
5) *Assume Suitable/Standard data if necessary.*

Q1) a) Explain SIM & RIM instruction. **[8]**

b) Explain the Multiple Interrupts and Priority Encoder with neat Diagram. **[9]**

OR

Q2) a) Explain the 8 Steps of interrupt process in 8085. **[8]**

b) Draw and explain main types of 8085 interrupts and respective vector locations. **[9]**

Q3) a) Write a program to display the message μp-rdy (microprocessor-ready) using 8255 PPI and MPU and describe it. **[9]**

b) Explain the principles of analog-to-digital conversion. Describe the key features of ADC 0808. Provide a detailed schematic diagram illustrating the interfacing of an ADC 0808 with a microprocessor 8085, highlighting all essential connections and components. **[9]**

OR

Q4) a) Explain Basic concept of 3-bit ADC and 3-bit DAC converter using neat diagrams. **[9]**

b) Design a multiplexed seven - segment LED display system schematic using the 8085 Microprocessor along with the 8255 programmable peripheral interface (PPI). Provide a detailed explanation of the circuit diagram and components used. **[9]**

P.T.O.

Q5) a) Write at least 8 differences between a microprocessor and a microcontroller. **[8]**

b) Draw and explain 8051 Block diagram. Also write features of 8051 Microcontroller. **[9]**

OR

Q6) a) Provide a labeled diagram of the pin configuration for an 8051 Microcontroller. Explain the functions of at least five essential pins. **[8]**

b) Provide an overview of the instruction set of the 8051 Microcontroller. How do instructions differ in terms of their functionality? **[9]**

Q7) a) Explore the various modes of operation for the parallel port in the 8051 Microcontroller. How do these modes allow the Microcontroller to interact with external devices? **[9]**

b) Explain the role of the "IE" (Interrupt Enable) and "IP" (Interrupt Priority) registers in the 8051. **[9]**

OR

Q8) a) Explain the interrupt structure of the 8051 Microcontroller. How do different types of interrupts work? **[9]**

b) Write in detail about the interfacing of LCD with 8051 Microcontroller and draw its neat connection diagram. **[9]**



Total No. of Questions : 8]

SEAT No. :

P6775

[Total No. of Pages : 2

[6181]-376

B.E. (Automation and Robotics)

MODERN MACHINING PROCESSES

(2019 Pattern) (Semester - VII) (Elective - III) (402544C)

Time : 2½ Hours] *[Max. Marks : 70*

Instructions to the candidates:

1) ***Answer Q1 or Q2, Q3 or Q4, Q5 or Q6, Q7 or Q8.***
2) ***Neat diagrams must be drawn wherever necessary.***
3) ***Assume suitable data if necessary***
4) ***Use of Non-programmable scientific calculators is allowed.***
5) ***Figures to the right indicate full marks.***

Q1) a) Explain Electrochemical Grinding with neat sketch. **[5]**

b) Explain main parts Electrochemical Machining. **[6]**

c) Explain advantages, disadvantages and applications of electrochemical machining. **[6]**

OR

Q2) a) Explain Chemical Machining. **[5]**

b) Explain advantages, disadvantages and applications of Photochemical machining. **[6]**

c) Explain process parameters and process capabilities of electro stream drilling. **[6]**

Q3) a) Explain applications of Electric Discharge Grinding. **[7]**

b) Explain Electrical discharge machining with neat skeatch. **[5]**

c) Explain Wire EDM machining with neat sketch. **[6]**

OR

Q4) a) Explain Heat Affected Zone in Electrical Discharge Machining. **[5]**

b) Write the differences between EDM wire cutting and conventional EDM **[6]**

c) Explain advantages and disadvantages of Electric Discharge Grinding. **[7]**

P.T.O.

Q5) a) Explain the effect of Process Parameters and Material processed in Diamond turn machining. **[5]**

b) Explain the applications of micro turning. **[6]**

c) Explain the effect of process parameters and materials processed in micro milling. **[6]**

OR

Q6) a) Explain the material removal mechanism and materials processed in Micro drilling. **[6]**

b) Explain Micro Engraving, its working principle and material removal mechanism. **[5]**

c) Explain Micro Electro Discharge Machining, its working principle and material removal mechanism. **[6]**

Q7) a) Explain the effect of material aspects in Nano Machining. **[6]**

b) Explain the Microsystems Products. **[6]**

c) Explain wet etching in Micro and Nano fabrication. **[6]**

OR

Q8) a) Write short note on LIGA process. **[6]**

b) Explain application of Microsystems. **[6]**

c) Explain Magnetic Abrasives Finishing (MAF) and write its applications **[6]**



Total No. of Questions : 8]

SEAT No. :

P8653

[Total No. of Pages : 2

[6181] - 377

B.E. (Automation & Robotics)

INDUSTRIAL ENGINEERING

(2019 Pattern) (Semester - VII) (Elective - III) (402544 D)

Time : 2 ½ Hours] ***[Max. Marks : 70***

Instructions to the candidates:

1) ***Answer Q.l or Q.2, Q.3 or Q.4, Q.5 or Q.6, Q.7 or Q8.***
2) ***Neat diagrams must be drawn whenever necessary.***
3) ***Assume suitable data if necessary.***
4) ***Use of non-programmable scientific calculators is allowed.***
5) ***Figures to the right indicate full marks.***

Q1) a) Explain the importance of site selection. What are the factors which should be considered during selection of location of plant? **[9]**

b) Classify and explain different types of material handling equipment. **[8]**

OR

Q2) a) Classify and explain different computer aided layout design techniques. **[9]**

b) Explain **[8]**

i) Plant layout

ii) Craft, Blocplan, Corelap

Q3) a) List any six functions of production planning and control. **[9]**

b) Data on the sales of Diesel engines for the last 12 years is given below, By the method of 3 yearly moving averages establish the trend values and forecast demand for 13th year. If the actual demand for the l3th year I s 540 nos. What shall be the forecast of 14th year. **[9]**

Year	1	2	3	4	5	6	7	8	9	10	11	12
Sale numbers	335	350	330	340	380	410	430	440	430	460	500	560

OR

P.T.O.

Q4) a) Explain the following term in brief : **[9]**

i) Batch Production

ii) Make to stock

b) Discuss the importance of sales forecasting. Explain any one method of Sales forecasting. **[9]**

Q5) a) Define inventory and its importance. Enlist types of inventories. **[9]**

b) Explain **[8]**

i) MRP-II

ii) Concept of supply chain

OR

Q6) a) A manufacturing company requires 10,000 units per year. The cost per unit is Rs.2 and it costs Rs.36 to place an order and to process the delivery. The inventory carrying cost is estimated at 9% of average inventory investment. Determine **[9]**

i) Economic order quantity.

ii) Optimum number of orders to be placed per annum.

iii) Minimum total cost of inventory per annum.

b) What is cost accounting? What are objectives of cost accounting? Explain elements of cost. **[8]**

Q7) a) Explain Rapid Upper Limb Assessment(RULA.) **[9]**

b) What is Value Engineering? Explain in detail. **[9]**

OR

Q8) a) What are the characteristics of good wage system and what are the factors influencing the wage system? **[9]**

b) Explain principles and social significance of ergonomics. **[9]**

❄ ❄ ❄

Total No. of Questions : 8]

SEAT No. :

P8654

[Total No. of Pages : 2

[6181] - 379

B.E. (Automation and Robotics Engineering)

LEAN MANUFACTURING

(2019 Pattern) (Semester - VII) (Elective - IV) (402545 A)

Time : 2 ½ Hours] *[Max. Marks : 70*

Instructions to the candidates:

1) ***Answer Q.l or Q.2, Q.3 or Q.4, Q.5 or Q.6, Q.7 or Q8.***
2) ***Neat diagrams must be drawn wherever necessary.***
3) ***Assume suitable data if necessary.***
4) ***Use of non-programmable scientific is allowed.***
5) ***Figures to the right indicate full marks.***

Q1) a) Briefly explain how equipment reliability can be improved by implementing TPM? **[8]**

b) Define KAIZEN. Briefly explain principles of kaizen. **[9]**

OR

Q2) a) What do you mean by Total Productive Maintenance? Elaborate it's objectives. **[8]**

b) Explain Poka-Yoke. How it can be used for mistake proofing? **[9]**

Q3) a) Explain how the cellular manufactiring concept can be applied for designing and implementing cellular layouts. **[9]**

b) Elaborate different Lean tools in Six Sigma process improvement. **[9]**

OR

Q4) a) Write short note on cellular manufacturing. Briefly discuss benefits and characteristics of cellular manufacturing. **[9]**

b) Discuss Integration of lean manufacturing and Six Sigma. Give appropriate exapmle. **[9]**

P.T.O.

Q5) a) Explain with a suitable example how do you create cross-functional teams for lean projects. **[8]**

b) Explain in detail Lean metrics and data collection. **[9]**

OR

Q6) a) Write a short note on Lean scorecards and visual management. **[8]**

b) Explain Key peformance indicators (KPIs) in lean manufactiring. **[9]**

Q7) a) Analysis of successful lean manufacturing implementations. Discuss. **[9]**

b) Discuss lessons learned from lean case studies in actual implementation. **[9]**

OR

Q8) a) Write a short note on Developing a lean implementation plan. Explain with appropriate example. **[9]**

b) Briefly discuss the problems occurs in implementing the lean. **[9]**

❄ ❄ ❄

Total No. of Questions : 8]

SEAT No. :

P-8782

[Total No. of Pages : 2

[6181]-381

B.E. (Automation & Robotics)

ADDITIVE MANUFACTURING

(2019 Pattern) (Semester - VII) (402545 C) (Elective - IV)

Time : 2½ Hours] *[Max. Marks : 70*

Instructions to the candidates :

1) ***Answer Q.1 or Q.2, Q.3 or Q.4, Q.5 or Q.6, Q.7 or Q.8.***
2) ***Neat diagrams must be drawn wherever necessary.***
3) ***Figures to the right indicate full marks.***
4) ***Assume suitable data if necessary.***

Q1) a) Explain the printing mechanism involved in binder jetting with neat sketch. Give their advantages, disadvantages and applications. **[9]**

b) Explain the working principle of direct metal deposition. List the advantages and limitations. **[9]**

OR

Q2) a) Explain the construction and working principle of fused deposition modelling with neat sketch. Discuss the possible defects in this method. **[9]**

b) Explain the process polyjet printing. Also write the applications, merits and demerits. **[9]**

Q3) a) What are the biomimetic materials? Explain the post processing steps involved in additive manufacturing. **[9]**

b) Explain with an example how the material and the additive manufacturing method can be selected for various applications. **[8]**

OR

Q4) a) Discuss the various techniques used to enhance the surface properties of additively manufactured parts. **[8]**

b) Explain the various design considerations/rules involved in additive manufacturing with the help suitable sketch. **[9]**

P.T.O.

Q5) a) Explain the functions of sensors, actuators, motors and control electronics used in construction of 3D printers. **[9]**

b) Define slicing and their types. Explain the various infill strategies used for area filling the sliced model. **[9]**

OR

Q6) a) Explain the construction details of 3D printers. Also explain the significance of nozzle in 3D printer. **[9]**

b) Explain the steps followed while slicing a CAD model in slicing software along software integration. **[9]**

Q7) a) How additive manufacturing can influence the mass customization? Explain in detail mentioning its future trends. **[9]**

b) Discuss a case study on how the performance of automobile parts can be improved by adopting additive manufacturing. **[8]**

OR

Q8) a) Discuss the benefits of additive manufacturing in the research and development sector. **[9]**

b) Explain the advantages and challenges involved in adopting the additive manufacturing technology in various engineering sectors. **[8]**

▽▽▽▽

Total No. of Questions : 8]

SEAT No. :

P-8655

[Total No. of Pages : 2

[6181]-383

B.E. (Automation & Robotics)

AUGMENTED REALITY AND VIRTUAL REALITY

(2019 Pattern) (Semester - VII) (402545 (E)) (Elective - IV)

Time : 2½ Hours] ***[Max. Marks : 70***

Instructions to the candidates :

1) ***Solve Q.1 or Q.2, Q.3 or Q.4, Q.5 or Q.6, Q.7 or Q.8.***
2) ***Neat diagrams must be drawn wherever necessary.***
3) ***Figures to the right indicate full marks.***
4) ***Assume suitable data if necessary.***

Q1) a) What are trackers? Enumerate some important tracker characteristics (Make drawings to illustrate your concepts). **[6]**

b) How is depth perceived by the human vision system? Make a drawing and explain. **[6]**

c) What is object intelligent behavior in VR? **[5]**

OR

Q2) a) What are the advantages/disadvantages of ultrasonic trackers? **[6]**

b) What hardware is necessary to take the output of a PC graphics accelerator and display it on a monoscopic HMD? **[6]**

c) How does the Pinch Glove work? **[5]**

Q3) a) What is taxonomy in augmented reality? **[6]**

b) What are the technologies behind augmented reality? **[6]**

c) What are the challenges of virtual reality? **[5]**

OR

Q4) a) What are the different types of Augmented Reality? **[6]**

b) What is augmented reality and its features? **[6]**

c) Which are the evaluation methods of AR? **[5]**

P.T.O.

Q5) a) What are human factor studies? Why are they important to VR? What are their main stages? **[6]**

b) What is integrated VR system? **[6]**

c) How to develop VR applications? **[6]**

OR

Q6) a) What is virtual acoustics in VR? **[6]**

b) What is object intelligent behavior in VR? **[6]**

c) Explain VRTK toolkit in VR. **[6]**

Q7) a) Explain any one medical application of VR. **[6]**

b) What is the Visible Human database and how was it created? Describe some of its applications. **[6]**

c) Describe the system architecture and use of the BioSimMER system. **[6]**

OR

Q8) a) What are the most important VR application domains and geographic areas, according to the CyberEdge Information Systems [2002] survey? **[6]**

b) What is the Digital Anatomist project and why is it increasing access for students? **[6]**

c) Describe the prostate palpation trainer. Comment on its human factors testing results. **[6]**

▽▽▽▽

Total No. of Questions : 8]

SEAT No. :

P7284

[Total No. of Pages : 2

[6181]-383A

B.E. (Robotics and Automation)

MACHINE VISION SYSTEM

(2019 Pattern) (Semester-VII) (411501)

Time : 2½ Hours] *[Max. Marks : 70*

Instructions to the candidates:

1) ***Answer Q.1 or Q.2, Q.3 or Q.4, Q.5 or Q.6, Q.7 or Q.8.***
2) ***Neat diagrams must be drawn wherever necessary.***
3) ***Figures to the right side indicate full marks.***
4) ***Use of calculator is allowed.***
5) ***Assume suitable data,if necessary.***

Q1) a) Explain in detail geometic mean filters with relevant mathematical equations. **[8]**

b) For the below given 5×5 image find out following: **[10]**

Image-

1 4 5 1 6
6 5 7 2 2
0 0 1 5 1
2 0 1 0 6
2 3 3 2 0

i) Probability Density Function (PDF) of each pixel value.
ii) Huffman's Code for each pixel value.
iii) What is the Huffman's code length for highest & lowest probability for pixel and why? Justify your answer.

OR

Q2) a) Below is the 5×4 binary image. **[8]**

Image-

0 0 1 1 1
1 1 1 0 0
0 0 1 1 1
1 1 0 0 0

For the given image calculate following:

i) Total number of Run length vectors.
ii) Compression ratio.
iii) Predict if data is compressed? Justify your answer.

P.T.O.

b) Write a short note on transform coding compression technique. **[5]**

c) What is the significance of probability density function in machine vision systems? Explain in detail. **[5]**

Q3) a) Explain region-based segmentation technique in detail. **[9]**

b) How the image is segmented with technique-based approach and explain an one type in detail? **[9]**

OR

Q4) a) Write a short note on approach-based segmentation in an image segmentation. **[9]**

b) How the image is segmented with technique-based approach and explain Structural technique in detail? **[9]**

Q5) a) Explain Fourier based alignment in motion estimation & how it is different from hierarchical motion estimation? **[9]**

b) Write a note on rotation & scale motion estimation techniques with relevant example. **[8]**

OR

Q6) a) Write a note on hierarchical motion estimation and explain how it is used & why it is common? **[9]**

b) Explain windowed correlation in motion estimation with relevant mathematical expression. **[8]**

Q7) a) What is supervised learning algorithm and explain in detail. **[9]**

b) What are deep neural networks and how it can be implemented in humanoid robots? **[8]**

OR

Q8) a) Explain in detail unsupervised learning algorithm and explain in detail. **[9]**

b) What are convolutional neural networks and explain how it is feasible to use in robotics applications. **[8]**



Total No. of Questions : 8]

SEAT No. :

P7845

[Total No. of Pages :4

[6181]-384

B.E. (Robotics & Automation)

ROBOT SYSTEM RELIABILITY & SAFETY

(2019 Pattern) (Semester-VII) (411502)

Time : 2 ½ Hours] ***[Max. Marks : 70***

Instructions to the candidates:

1) ***Solve Q.1 or Q.2, Q.3 or Q.4, Q.5 or Q.6, Q.7 or Q.8.***
2) ***Figure to the right indicates full marks.***
3) ***Assume suitable data, if necessary.***
4) ***Use of Logarithmic Table, slide rule and electronic pocket calculator is allowed.***
5) ***Neat diagrams must be drawn wherever necessary.***

Q1) a) Apply the AGREE allocation method to a robotic system containing the following components: **[8]**

Component = C. Parts count= PC Importance index= IND Operating time hr/yr = OT

C: Control System.	PC: 153 IND: 0.95	OT: 2000
C: Motor drive.	PC: 28 IND: 0.90	OT: 1000
C: Actuation System	PC: 34 IND: 1.00	OT: 2000

The warranty program requires a reliability of 0.99 over the first year of use.

b) A computer used for controlling robot consists of three sub- system having consecutive failure rates λ_1=0.015, λ_2=0.018, λ_3=0.023 failures per month. Select the requirements of reliability through 36 months in service to achieve total reliability it as 0.98 using ARINC Method of Reliability Allocation. Also, check if the total reliability goal of computer is achieved. **[9]**

OR

P.T.O.

Q2) a) A two-element system model is subjected Markov Analysis having the block diagram given below: **[8]**

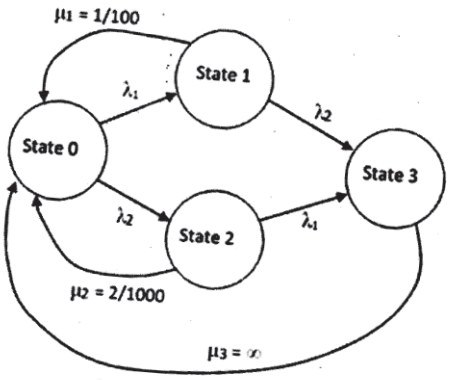

Derive an expression of reliability for this system assuming the elements are independent and are parallel.Also, find the reliability if λ_1 =50E-06 failures per hour, λ_2 = 20E-06 failures per hour, μ_1= 1/100 repairs per hour, and μ_2=2/1000 repairs per hour.Consider the steady state transition throughout the system.

b) Optimize and allocate the reliability of a robot motors for 4 axis articulated robot using Minimum Effort Method, if cost of all motors should not exceed €8000: **[9]**

Joint	Component Feasibility	Initial Reliability	Minimum Reliability	Maximum Reliability	Per unit cost
J_i	f_i	R_i	$R_{i,min}$	$R_{i,max}$	C_i
1	0.68	0.985	0.9	0.999	30
2	0.66	0.985	0.9	0.999	30
3	0.66	0.985	0.9	0.999	40
4	0.64	0.98	0.9	0.999	40

Q3) a) Find expression of system probability at each stage using Markov Analysis Method for the 3-unit system having following transition state diagram: **[12]**

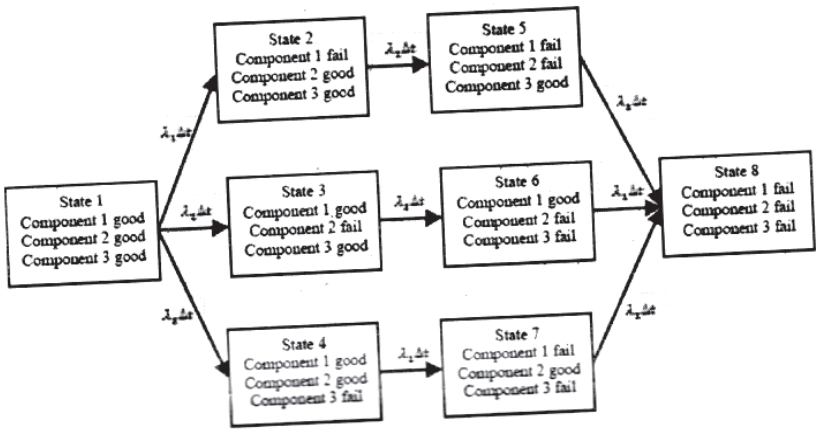

b) Explain Markov Analysis Model for Reliability. **[6]**

OR

Q4) a) Consider below System. Use event space method and find an equation for the reliability of the system if all chunks are identical and independent.**[9]**

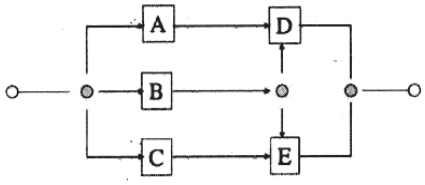

Find the reliability of the following system if the probability of success of each component is 0.8.

b) Explain the Minimum Effort Method of Reliability Allocation. **[9]**

Q5) a) Define Risk. Explain various .perceptions, criteria, management method and estimation of risk. **[9]**

b) Explain in details the lead and lag indicators of the hazard control. **[9]**

OR

Q6) a) If sampling was conducted for a worker working with for air contaminant containing heptane for two cases as below: **[9]**

Case-1 The worker worked for seven hours and the concentration for that seen hour was 500 parts per million (ppm) for a shift of 8 hours.

Case-2 The worker worked for one workspace for 2 hours with 100 ppm exposure and in another workspace for 3 hours with 200 ppm for a shift of 8 hours.

Find time weighted average for both the cases according to OSHA specification. Also check is this exposure is within the safe range if safe range of time weighted average for heptane is 400 ppm as per OSHA.

b) Explain in detail about ISO45001: 2018. **[9]**

Q7) a) Differentiate between Unsafe Condition and Unsafe Act with relevant examples and case study. **[8]**

b) Explain RULA and REBA to evaluate musculoskeletal disorder. **[9]**

OR

Q8) a) Explain various kinds of hazards and what are the various methods to avoid, control and measure such hazards. Explain with relevant case study. **[8]**

b) Explain various methods of Preliminary Hazard Analysis or Risk Assessment. Use relevant case studies to explain various methods. **[9]**

❖ ❖ ❖

Total No. of Questions : 8]

SEAT No. :

P-8656

[Total No. of Pages : 3

[6181]-385

B.E. (Robotics & Automation Engineering)

ADVANCED COMPUTATIONAL TECHNIQUES

(2019 Pattern) (Semester - VII) (411503A) (Elective - III)

Time : 2½ Hours] *[Max. Marks : 70*

Instructions to the candidates:

1) ***Answer Q1 or Q2, Q3 or Q4, Q5 or Q6, Q7 or Q8.***
2) ***Neat diagrams must be drawn wherever necessary.***
3) ***Assume suitable data if necessary***
4) ***Use of Non-programmable scientific calculators is allowed.***
5) ***Figures to the right indicate full marks.***

Q1) a) Use the shooting method to solve **[8]**

$$\frac{d^2T}{dx^2} + h'(T_a - T) = 0$$

for a 10-m rod with $h' = 0.01$ m^2, $T_a = 20$, and the boundary conditions $T(0) = 40$ $T(10) = 200$

b) An axially loaded wooden column has the following characteristics :

$E = 10 \times 10^9$ Pa, $I = 1.25 \times 10^{-5}$m^4 and $L = 3$m.

Employ the polynomial method to determine the eigenvalues for the axially loaded column using (a) one, (b) two, (c) three and (d) four interior nodes. **[9]**

OR

Q2) a) Evaluate the eigenvalues and the eigen vectors of Equation **[8]**

$$\left(\frac{2k}{m_1} - \omega^2\right)A_1 - \frac{k}{m_1}A_2 = 0$$

$$-\frac{k}{m_2}A_1 + \left(\frac{2k}{m_2} - \omega^2\right)A_2 = 0$$

For the case where $m_1 = m_2 = 40$ kg and $k = 200$ N/m.

P.T.O.

b) Explore how MATLAB can be used to solve the following set of nonlinear ODEs from t 5 0 to 20 : **[9]**

$$\frac{dx}{dt} = 1.2x - 0.6xy \quad \frac{dy}{dt} = -0.8y + 0.3xy$$

where $x = 2$ and $y = 1$ at $t = 0$.

Q3) a) Solve subject to the conditions **[9]**

$$\frac{\partial u}{\partial t} = \frac{\partial^2 u}{\partial x^2}$$

u(x, 0) = 0, u(0, t) = 0 and u(1, t) = t. Compute u for t = 1/8 in two steps using crank-nicholson formula

b) Use the simple implicit finite-difference approximation to solve for the temperature distribution of a long, thin rod with a length of 10 cm and the following values: k' = 0.49 cal/(s . cm . °C), Δx = 2 cm and Δt = 0.1 s. At t = 0, the temperature of the rod is zero and the boundary conditions are fixed for all times at $T(0)$ = 100°C and T(10) = 50°C. Note that the rod is aluminum with C = 0.2174 cal/(g . °C) and ρ = 2.7 g/cm^3. Therefore, k = 0.49 / (2.7 . 0.2174) = 0.835 cm^2/s and $\lambda = 0.835(0.1)/(2)^2 = 0.020875$. **[9]**

OR

Q4) a) Find by Liebmann's Method the values at the interior lattice points of a square plate of the harmonic function u whose boundary values are given in the figure. **[9]**

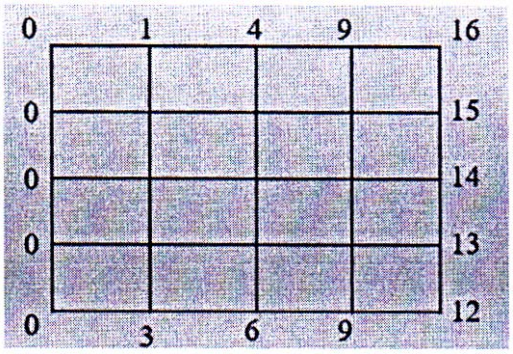

b) Derive the modified equation for the Lax-Friedrich's scheme for $u_t + cu_x = 0$ through terms of first order. Compare this modified equation to that for the upwind scheme and make predictions about their relative performance **[9]**

Q5) a) Explain the different terms involved in Smoothed-particle hydrodynamics. Explain with suitable example. **[8]**

b) Discuss hp-FEM method. Explain with example. **[9]**

OR

Q6) a) Explain the different terms involved in Moving particle semi-implicit method. Explain with suitable example. **[8]**

b) Write a short note on Discontinuous Galerkin (DG) Meshfree Methods. **[9]**

Q7) a) Explain Genetic algorithms. Explain any one genetic algorithm in details. **[9]**

b) Elaborate Sequential quadratic programming. Explain with a example. **[9]**

OR

Q8) a) Write a short note on simulated annealing. How it can be used for problem solving? **[9]**

b) Application to solve inverse kinematics problems. Discuss. **[9]**



Total No. of Questions : 8]

SEAT No. : ____

P-7833

[Total No. of Pages : 2

[6181]-386

B.E. (Robotics & Automation Engineering)

WIRELESS SENSOR NETWORK (Theory)

(2019 Pattern) (Semester - VII) (411503B) (Elective - III)

Time : 2½ Hours] ***[Max. Marks : 70***

Instructions to the candidates:

1) ***All questions are compulsory i.e. Solve Q.1 or Q.2, Q.3 or Q.4, Q.5 or Q.6, Q7 or Q8.***
2) ***Assume suitable data, if necessary.***
3) ***Figures to the right side indicate full marks.***
4) ***Neat diagrams must be drawn wherever necessary.***

Q1) a) Can the MAC protocols of 802.11 & Bluetooth be used for WSN? Justify and Explain these protocol. **[9]**

b) Explain WSN Standards- IEEE802.15.4 in detail. **[8]**

OR

Q2) a) Explain in brief about Classifications of MAC Protocols. **[9]**

b) Explain the terms : **[8]**

i) Wibree

ii) BLE

iii) Zwave

iv) ANT

Q3) a) Explain Localization Challenges and its Properties. **[9]**

b) Explain in detail : **[8]**

i) Deployment Schemes

ii) Proximity Schemes

OR

P.T.O.

Q4) a) What is mean by Routing? Explain static routing in detail. **[9]**

b) Explain in detail : **[8]**

i) Ranging Schemes

ii) Location-Based Routing

Q5) a) Explain different Security Issues in Wireless Sensor Networks. **[9]**

b) Explain different attacks on WSN. **[9]**

OR

Q6) a) Explain Security Mechanisms In WSN. **[9]**

b) Explain Different Clustering Techniques in detail. **[9]**

Q7) a) Write short note on General Testing and Validation process of WSN. **[9]**

b) Explain WSN Applications in detail. **[9]**

OR

Q8) a) Write notes on i) Home automation. **[9]**

b) Explain Top-Down Design Process Approach in detail for WSN. **[9]**

⌘⌘⌘

Total No. of Questions : 8]

SEAT No. : ____

P-7834

[Total No. of Pages : 2

[6181]-387

B.E. (Robotics & AutomationEngineering)

MICROPROCESSOR AND MICROCONTROLLER

(2019 Pattern) (Semester - VII) (411503C) (Elective - III)

Time : 2½ Hours] ***[Max. Marks : 70***

Instructions to the candidates:

1) ***All questions are compulsory i.e. Solve Q1 or Q2, Q3 or Q4, Q5 or Q6, Q7 or Q8.***
2) ***Neat diagrams must be drawn wherever necessary.***
3) ***Figures to the right side indicate full marks.***
4) ***Assume suitable data if necessary.***

Q1) a) Discuss the significance of following signals of 8085 in detail : **[8]**

HOLD, READY, ALE, HLDA

b) Illustrate the addressing modes of 8051 microcontroller. Support your answer with suitable examples. **[9]**

OR

Q2) a) Analyze the architecture of 8051 microcontroller along-with a suitable block diagram. **[8]**

b) Analyze the PSW of 8051 and also explain the relevant flag bits. **[9]**

Q3) a) Analyze the architecture of PIC18FXX microcontroller along-with a suitable block diagram. **[9]**

b) Explain : **[8]**

i) Watch Dog Timers

ii) Power down modes

OR

Q4) a) Comparison of the PIC family. **[8]**

b) Illustrate the Instruction set of PIC18FXX microcontroller. Support your answer with suitable examples. **[9]**

P.T.O.

Q5) a) Draw the interfacing diagram of Seven segment LED with Cortex M4 based microcontroller. Also write basic algorithm used for this interfacing. **[9]**

b) Write down concept of GPIO programming. **[9]**

OR

Q6) a) Draw the interfacing diagram of LDR and MQ3 with STM32F4xx based microcontroller and explain it. **[9]**

b) Explain STM32F4xx: Timers and Counters. **[9]**

Q7) a) Write down the Application of the Microcontroller and explain its. **[9]**

b) Explain in details Mobile Robot Analysis and control for Pipe Line Inspection. **[9]**

OR

Q8) a) Write down short note on Unmanned Vehicle Design Using Microcontroller. **[9]**

b) Compare : Microprocessor and Microcontroller **[9]**



Total No. of Questions : 8]

SEAT No. :

P-8657

[Total No. of Pages : 2

[6181]-388

B.E. (Robotics & Automation Engineering)

ERGONOMICS AND WORK MANAGEMENT

(2019 Pattern) (Semester - VII) (411503D) (Elective - III)

Time : 2½ Hours] ***[Max. Marks : 70***

Instructions to the candidates:

1) ***Answer Q1 or Q2, Q3 or Q4, Q5 or Q6, Q7 or Q8.***
2) ***Neat diagrams must be drawn wherever necessary.***
3) ***Assume suitable data jf necessary.***
4) ***Use of Non-programmable scientific calculators is allowed.***
5) ***Figures to the right indicate full marks.***

Q1) a) What are the types and uses of anthropometry? **[9]**

b) Discuss Tactual and Olfactory display and controls. **[8]**

OR

Q2) a) What is design of work surface? Explain with example. **[9]**

b) Discuss the effect of following on human performance in work : **[8]**

i) Illumination

ii) Dust

Q3) a) How data is collected and interpreted in design research? **[9]**

b) How human factors and ergonomics is addressed in design process? **[9]**

OR

Q4) a) Discuss Product life cycle in detail. **[9]**

b) Explain the framework for integrating environmental issues in ergonomics. **[9]**

Q5) a) Explain any two productivity models. **[9]**

b) What is lean manufacturing? Discuss in detail. **[8]**

OR

P.T.O.

Q6) a) Which techniques are used to reduce the work content. **[9]**

b) Explain Kaizen and Poka-Yoke used in work management. **[8]**

Q7) a) What is factory act? Discuss its implementation. **[9]**

b) Explain in detail safety analysis. **[9]**

OR

Q8) a) Discuss ESI act in detail. **[9]**

b) What are the different features of factory act. **[9]**

⌘⌘⌘

Total No. of Questions : 8]

SEAT No. :

P7846

[Total No. of Pages : 2

[6181]-389

B.E. (Robitics & Automation)

COMPUTATIONAL FLUID DYNAMICS

(2019 Pattern) (Semester-VII) (Elective-IV) (411504 (A))

Time : 2½ Hours] *[Max. Marks : 70*

Instructions to the candidates:

1) ***Solve Q1 or Q2, Q3 or Q4, Q5 or Q6, Q7 or Q8.***
2) ***Neat diagrams must be drawn wherever necessary.***
3) ***Figures to the right side indicate full marks.***
4) ***Assume suitable data if necessary.***
5) ***Use of logarithmic tables, slide rules Mollier charts, electronic pocket calculator and steam table is allowed.***

Q1) a) What are the advantages and limitations of Finite Volume method? **[8]**

b) What considerations should be taken into account when selecting an advection scheme for a particular problem in Finite Volume method?**[9]**

OR

Q2) a) What types of problems can be solved using Finite Volume method?**[8]**

b) Explain how the boundary conditions are incorporated in the Finite Volume Method for a 1 -D diffusion problem? **[9]**

Q3) a) What is the SIMPLE algorithm, and why is it used in CFD? **[9]**

b) How are boundary conditions incorporated in the discretization of the momentum equation? **[9]**

OR

Q4) a) Explain the concept of stream function and vorticity in fluid dynamics.**[9]**

b) Compare the treatment of boundary conditions on staggered and collocated grids. **[9]**

P.T.O.

Q5) a) Why is a grid necessary in computational simulations? **[9]**

b) Explain geometric modeling in the context of grid generation. **[9]**

OR

Q6) a) What is a multi-block grid, and why is it used in certain simulations?**[9]**

b) What is algebraic grid generation. and how does it differ from other grid generation methods? **[9]**

Q7) a) What are recent advancements in CFD techniques and methodologies?**[8]**

b) Explain how CFD assist in simulating heat transfer and thermal management in engineering applications. **[9]**

OR

Q8) a) In what ways does CFD contribute to the simulation of aerodynamics in various industries? **[8]**

b) How are computer graphics used in visualizing and interpreting CFD simulation results? **[9]**



Total No. of Questions : 8]

SEAT No. :

P-8658

[Total No. of Pages : 2

[6181]-390

B.E. (Robotics & Automation)

INTERNET OF THINGS AND MACHINE LEARNING

(2019 Pattern) (Semester - VII) (411504 (B)) (Elective - IV)

Time : 2½ Hours] *[Max. Marks : 70*

Instructions to the candidates :

1) ***Solve Q.1 or Q.2, Q.3 or Q.4, Q.5 or Q.6, Q.7 or Q.8.***
2) ***Neat diagrams must be drawn wherever necessary.***
3) ***Figures to the right indicate full marks.***
4) ***Assume suitable data if necessary.***

Q1) a) What is cloud storage? **[6]**

b) Which are the Characteristics of IoT Databases? **[6]**

c) Which are Wireless Media Access Issues in Internet of Things? **[5]**

OR

Q2) a) How does cloud storage work? **[6]**

b) State IoT Database Example Use Cases. **[6]**

c) Describe Wireless Sensors for the Internet of Things (IoT). **[5]**

Q3) a) What is the role of machine learning in automation? **[6]**

b) Which are the types of Machine Learning? Explain any one? **[6]**

c) Explain data collection and pre-processing techniques. **[5]**

OR

Q4) a) What is Motivation and role of machine learning in Robotics and Automation? **[6]**

b) Explain the Machine learning Life cycle? **[6]**

c) What are the Uses of Clustering in ML? **[5]**

P.T.O.

Q5) a) What is the ESP8266 Wi-Fi Module? **[6]**

b) Describe ESP8266 WiFi Library for Arduino. **[6]**

c) How to send sensor data to web server? **[6]**

OR

Q6) a) Draw the circuit diagram how to use ESP8266 Wi-Fi Module. **[6]**

b) How do web servers work? **[6]**

c) Which are the steps to install and configure Apache Http Webserver and PHP module in windows server machine. **[6]**

Q7) a) Why IoT is important in real life? **[6]**

b) Which are the applications of IoT today? Explain in brief. **[6]**

c) How to create the best patient tracking system for your hospital? **[6]**

OR

Q8) a) State and explain IoT Applications in Manufacturing. **[6]**

b) How IoT is used in smart cars? **[6]**

c) What is smart crop monitoring system using IoT? **[6]**

▽▽▽▽

Total No. of Questions : 8]

SEAT No. :

P-7835

[Total No. of Pages : 3

[6181]-392

B.E. (Robotics & Automation Engineering)

POWER ELECTRONICS AND DRIVES

(2019 Pattern) (Semester - VII) (411504(D)) (Elective - IV)

Time : 2½ Hours] ***[Max. Marks : 70***

Instructions to the candidates:

1) ***All questions are compulsory i.e. Solve Q1 or Q2, Q3 or Q4, Q5 or Q6, Q7 or Q8.***
2) ***Assume suitable data, if necessary.***
3) ***Figures to the right side indicates full marks.***
4) ***Neat diagrams must be drawn wherever necessary.***
5) ***Use of calculator is allowed.***

Q1) a) With the help of a neat circuit diagram and associated waveforms, discuss the operation of Buck-Boost converter. List the advantages and disadvantages of this type of converter. **[9]**

b) Describe a Morgan chopper with a associated voltage and current waveforms. Enumerate the demerits of Morgan chopper compared to Jones chopper. **[9]**

OR

Q2) a) A Step Down dc chopper has a resistive load of R=15ohm and Input voltage Edc=200V. When the chopper remains ON, its voltage drop is 2.5V. The chopper frequency is 1kHz. If the duty cycle is 50%, determine:

i) Average Output Voltage

ii) RMS Output Voltage

iii) Chopper Frequency

[9]

b) With the help of neat circuit diagram and associated waveforms discuss the operation of a Buck converter. **[9]**

P.T.O.

Q3) a) With the help of neat circuit diagram and associated waveforms, explain the operation of single phase half bridge Voltage Source Inverter with (i) Resistive Load and (ii) Inductive Load. **[9]**

b) Compare between Voltage Source Inverter & Current Source Inverter. **[8]**

OR

Q4) a) With an appropriate power diagram, discuss the principle of working of a three-phase bridge inverter. Draw phase and Line voltage waveforms on the assumption that each thyristor conducts for 120° and the resistive load is star connected. Also, Prepare a table which shows the sequence of firing of various SCRs. **[9]**

b) A single phase half bridge inverter has a resistive load of 10Ω and the center-tap dc input voltage is 96V. Compute: **[8]**

i) RMS Value of output Voltage

ii) Fundamental component of the output voltage waveform

iii) First Five harmonics of the output-voltage waveform

iv) Fundamental power consumed by the load

v) RMS power consumed by the load

vi) Verify that the rms value determined by harmonic summation method is nearly equal to the value determined by integration method.

Q5) a) Describe the operation of single-phase Full-wave A.C voltage regulator with the help of voltage and current waveforms. Also derive the expression for average value of output voltage. **[9]**

b) Describe the operation of single phase to single phase step Down cycloconverter with neat power-diagram and voltage and current waveforms. **[9]**

OR

Q6) a) Discuss the working of delta connected three phase A.C regulator with suitable power diagram. Also, draw the various waveforms for $\alpha = 120°$. **[9]**

b) Describe the operation of single phase to single phase step up cycloconverter with neat power-diagram and voltage and current waveforms. **[9]**

Q7) a) Explain in detail classification of Electrical drives. **[8]**

b) Draw & Explain the operation of single-phase, half- wave converter drive. Also, draw the voltage and current waveforms. **[9]**

OR

Q8) a) State & discuss the various methods of speed control of induction motor. **[9]**

b) Explain role of electrical drive in energy conservation. **[8]**

Total No. of Questions : 8]

SEAT No. :

P7290

[Total No. of Pages : 2

[6181]-393

B.E. (Electronics & Computer Engineering)
DATA SCIENCE & VISUALIZATION
(2019 Pattern) (Semester-VII) (410341)

Time : 2½ Hours] *[Max. Marks : 70*

Instructions to the candidates:

1) ***Answer Q1 or Q2, Q3 or Q4, Q5 or Q6, Q7 or Q8.***
2) ***Figures to the right side indicate full marks.***
3) ***Assume suitable data,if necessary.***

Q1) a) What is data analysis? What are the issues in data analysis? What are the advantages of data analysis. **[6]**

b) What is Apriori Algorithm? Explain components of Aprior algorithm. Write the steps in Apriori Algorithm. **[6]**

c) What is K-Means algorithm? Explain in detail working of K-Means algorithm, State the application where the is preferred. **[8]**

OR

Q2) a) Explain Inertia, Dunn Index and Silhouette Score evaluation metrics for clustering. **[6]**

b) What is linear regression? Describe advantages and disadvantages of linear regression. **[6]**

c) What is the Naive Bayes algorithm? Explain the Naive Bayes algorithm with Bayes theorem and suitable example. Write the various applications of Naive Bayes algorithms **[8]**

Q3) a) Explain the term Entropy, Information Gain and Gini Index with respect to Decision Tree. **[8]**

b) What is Random Forest algorithm? Write the important features of Random Forest algorithm. Differentiate between Decision Tree and Random Forest. **[8]**

OR

P.T.O.

Q4) a) With the help of diagram explain working of Decision Tree. Explain different terminologies used in Decision Tree. Explain the classification and regression Decision Trees. **[8]**

b) What is back propagation in neural networks? Why back propagation is required in neural networks? How does back propagation work in a neural network? Write advantages of using the back propagation in neural networks. **[8]**

Q5) a) What is a Pie Chart? What is the purpose of Pie Chart? Write advantages & disadvantages of a Pie Chart. **[8]**

b) What is Histogram plot? When to use Histogram plot? Write difference between Bar plot and Histogram plot. **[8]**

OR

Q6) a) Draw the box plot for the given set of data **[8]**

25, 28, 29, 29, 30, 34, 35, 35, 37, 38

b) What is a Data Dashboard? What are the benefits of using data dashboards? How to create an effective data dashboard? **[8]**

Q7) a) What is the Self-Organizing Maps algorithm? Draw architecture and explain working of Self-Organizing Maps algorithm. Write applications of Self-Organizing Maps algorithm. **[9]**

b) What is Principal Component Analysis? Explain various steps for Principal Component Analysis algorithm. Write advantages and disadvantages for Principal Component Analysis. **[9]**

OR

Q8) a) What is meant by clustering high-dimensional data? Explain the different challenges of clustering high-dimensional data. Explain different methods for clustering high-dimensional data. **[9]**

b) Explain Parallel Coordinates plot for data visualization in detail and compare the following:

i) Parallel Coordinate plots and Scatter plots.

ii) Parallel Coordinate plots and Bar plots **[9]**



Total No. of Questions : 8]

SEAT No. : ____

P6776

[Total No. of Pages : 2

[6181]-394

B.E. (Electronics and Computer Engineering)
WEB TECHNOLOGY
(2019 Pattern) (Semester-VII) (410342)

Time : 2½ Hours] ***[Max. Marks : 70***

Instructions to the candidates:

1) ***Attempt Q.No.1 or Q.No.2, Q.No.3 or Q.No.4, Q.No.5 or Q.No.6, Q,No. 7 or Q.No.8.***
2) ***Figures to the right indicate full marks.***
3) ***Assume suitable data, if necessary.***

Q1) a) What are different data types available in Java Script? **[8]**

b) Explain the features java script and explain how to call Java Script function from HTML page. **[9]**

OR

Q2) a) How to select, append and remove elements using Jquery? **[9]**

b) What is DOM? Explain Document Object Model (DOM) with suitable example? **[8]**

Q3) a) What is Servlet? Explain the life cycle of servlet. Illustrate with example. **[9]**

b) Define JSP. List advantages of Java servlet over JSP. **[8]**

OR

Q4) a) What is session? How cookies & URL rewriting for session management in servlet. **[9]**

b) Compare doGet and doPost methods in servlet. **[8]**

Q5) a) List and Explain steps involved in connecting to MySQL with PHP? **[9]**

b) What is a multi dimensional array in PHP? Explain it with simple PHP code? **[9]**

OR

P.T.O.

Q6) a) What is Angular JS? List and explain various directives in Angular JS? **[9]**

b) Explain in detail WAP architecture & WML. **[9]**

Q7) a) Explain Architecture of EJB & Explain types of EJB in detail. **[9]**

b) What is use of JSF? Write differences between SOAP and REST in detail? **[9]**

OR

Q8) a) Write brief note on following: **[9]**

i) Word press

ii) Spring

b) Write short note on. **[9]**

i) Content Management system.

ii) Bootstrap.



Total No. of Questions : 8]

SEAT No. : ____

P7847

[Total No. of Pages : 2

[6181]-395

B.E. (Electronics & Computer Engineering)

INTERNET OF THINGS

(2019 Pattern) (Semester-VII) (410343)

Time : 2½ Hours] ***[Max. Marks : 70***

Instructions to the candidates:

1) ***Attempt Q.1 or Q.2, Q.3 or Q.4, Q.5 or Q.6, Q.7 or Q.8.***
2) ***Figures to the right indicate full marks.***
3) ***Assume Suitable data if necessary.***

Q1) a) Explain Wireless Sensor Network with suitable diagram. Describe various design challenges in Wireless Sensor Network. **[6]**

b) Write the features and services provided by Amazon Web Services (AWS) ToT Cloud Platform. **[6]**

c) Explain Infrastructure as a Service (IaaS) with neat diagram. Write advantages of IaaS. Compare IaaS and PaaS. **[8]**

OR

Q2) a) Explain with diagram how Wireless Sensor Network is used for smart home application. **[6]**

b) Describe private cloud in detail with diagram. State its advantages. **[6]**

c) What is cloud computing? Explain need of cloud computing. Explain various features/characteristics of cloud computing. **[8]**

Q3) a) Explain the following functions used in Arduino program. **[8]**

i) pinMode()

ii) Serial.begin()

iii) digitalWrite()

iv) analog Write()

b) Explain working of ultrasonic sensor with suitable diagram. Draw interfacing of ultrasonic sensor to Arduino UNO and write a program to measure the distance from obstacle. **[8]**

OR

P.T.O.

Q4) a) Write the features of Raspberry Pi. Draw interfacing of four LEDs to Raspberry Pi and write a program to turn ON and OFF all LEDs with a delay of 05 seconds. **[8]**

b) With the help of suitable block diagram explain step wise how data to cloud and analyzed using Raspberry Pi and any cloud platform. **[8]**

Q5) a) What are the characteristics of Big data? List out the components of Big data solution. Also explain each one in detail. **[8]**

b) What is Hadoop? Explain key features of Hadoop for Big Data. Write the advantages and disadvantages of Hadoop **[8]**

OR

Q6) a) What is big data? Explain need for modern corporate sector to go for big data strategy. Explain the different challenges of big data. **[8]**

b) Explain structured, semi-structured and unstructured data. Also compare structured, semi-structured and unstructured data. **[8]**

Q7) a) Explain the following with help of neat diagram **[9]**

i) Smart Health Care Monitoring by using IoT.

ii) Smart Agriculture Monitoring using IoT

b) What do you think citizens expect from their smart cities? What are the IoT use cases for smart cities. Give implementation details of any one use case. **[9]**

OR

Q8) a) What is wearable technology? Elaborate different modern trends in wearable technology in detail. **[9]**

b) Explain the following with help of neat diagram **[9]**

i) Greenhouse Monitoring using IoT.

ii) Smart Car Parking System using IoT.



Total No. of Questions : 8]

SEAT No. :

P6777

[Total No. of Pages : 2

[6181]-396

B.E. (Electronics & Computer Engineering)

BIG DATA & ANALYTICS

(2019 Pattern) (Semester - VII) (Elective - III) (410344(A))

Time : 2½ Hours] *[Max. Marks : 70*

Instructions to the candidates:

1) ***Answer Q1 or Q2 , Q3 or Q4, Q5 or Q6 and Q7 or Q8.***
2) ***Figures to the right side indicate full marks.***
3) ***Assume suitable data, if necessary.***

Q1) a) Explain Big data Ecosystem with suitable diagram. **[8]**

b) Explain anatomy of File read and write in HDFS. Write two Hadoop shell file management command. **[9]**

OR

Q2) a) Draw and explain Architecture of HIVE. **[8]**

b) Explain Map Reduce with proper diagram for word count example. **[9]**

Q3) a) Explain different kinds of Big Data Analysis. **[8]**

b) Why R is used?Write a user defined function to calculate a cube of a given number in R. **[9]**

OR

Q4) a) Explain different steps in Data Analytics Project Life cycle. **[8]**

b) List and explain the steps in discovery phase of data analytics life cycle. **[9]**

Q5) a) Explain challenges in Big data visualization. Write two data visualization functions from matplotlib. **[9]**

b) What is social media analytics? Explain it's need with sample case study. **[9]**

OR

P.T.O.

Q6) a) What are the advantages of data visualization? Write a short note on any three tools used for data visualization. **[9]**

b) List the conventional Data visualization tools. Explain any Two. List two applications of data visualization. **[9]**

Q7) a) How mobile analytics is different than social media analytics. Explain with suitable example. **[9]**

b) Explain four Big Data Use cases. **[9]**

OR

Q8) a) Explain types of Mobile Analytics. **[9]**

b) What is text mining? Draw and explain text mining architecture and explain its need. **[9]**



Total No. of Questions : 8]

SEAT No. :

P7848

[Total No. of Pages : 2

[6181]-397

B.E. (Electronics & Computer Engineering)

MOBILE APPLICATION DEVELOPMENT

(2019 Pattern) (Semester-VII) (410344 B) (Elective-III)

Time : 2½ Hours] *[Max. Marks : 70*

Instructions to the candidates:

1) ***Attempt Q1 or Q2, Q3 or Q4, Q5 or Q6, Q7 or Q8.***
2) ***Figures to the right side indicate full marks.***

Q1) a) Define User Interface (UI) elements in Android and provide three examples. **[8]**

b) Discuss the significance of Constraint Layout in Android UI design. Provide examples of its advantages over other layout types. **[9]**

OR

Q2) a) Discuss the steps involved in creating a simple animation using the Android Animation API. **[8]**

b) Differentiate between Image View and ImageButton in Android. Provide use case scenarios for each. **[9]**

Q3) a) Enumerate and describe three essential tools or frameworks used for testing Android applications. Compare and contrast their features and functionalities. **[9]**

b) Outline the step-by-step process of publishing an Android application on the Google Play Store. **[9]**

OR

Q4) a) Discuss the differences between Shared Preferences and Preference Fragment in Android. Explain when each should be used in an application. **[9]**

b) Describe the concept of resource management in Android applications. Discuss the benefits of maintaining resources in a hierarchical structure. **[9]**

P.T.O.

Q5) a) Discuss the key points developers should consider before deploying an app to ensure a smooth user experience post-deployment. **[8]**

b) Describe the usage of Android networking APIs in an Android application. Discuss at least three classes or interfaces related to networking and their functionalities. **[9]**

OR

Q6) a) Explain how to make network requests using HttpURLConnection and Retrofit in Android. Compare their advantages and limitations. **[8]**

b) Describe the permissions required and best practices for accessing telephony - related information in an Android app. **[9]**

Q7) a) Explain the role of SMS in Android telephony. Describe the steps involved in sending an SMS programmatically in an Android application. **[9]**

b) Define Location Based Services (LBS) in the context of Android development. Explain the importance of accessing device location for applications. **[9]**

OR

Q8) a) Explain how to display a map within an Android app using the Google Maps API. Provide a code snippet demonstrating the implementation. **[9]**

b) Discuss the process of obtaining continuous location updates in an Android app. Explain how to monitor location changes and update the UI accordingly. **[9]**



Total No. of Questions : 8]

SEAT No. :

P-7836

[Total No. of Pages : 2

[6181]-398

B.E. (Electronics and Computer Engineering)

INFORMATION AND CYBER SECURITY

(2019 Pattern) (Semester - VII) (410344C) (Elective - III)

Time : 2½ Hours] *[Max. Marks : 70*

Instructions to the candidates :

1) ***Answer Q.1 or Q.2, Q.3 or Q.4, Q.5 or Q.6, Q.7 or Q.8.***
2) ***Neat diagrams must be drawn wherever necessary.***
3) ***Figures to the right side indicate full marks.***
4) ***Assume suitable data if necessary.***

Q1) a) What is digital signature? Which security goals are met by signing a document using digital signature? **[8]**

b) Explain Diffie Hellman key Exchange Algorithm with example. **[6]**

c) What characteristics are needed in a secure hash function? **[4]**

OR

Q2) a) Explain with Diagram functioning of SHA-1 algorithm. **[8]**

b) Explain ElGamal encryption algorithm with example. **[6]**

c) Solve if $p = 7$, $q = 17$ using Diffie Hellman algorithm, select $a = 6$, $b = 4$. **[4]**

Q3) a) Explain Cloud computing and Cyber Crimes. **[7]**

b) Explain Qualitative Risk Analysis. **[6]**

c) Differentiate Risk Management vs. Risk Assessment. **[4]**

OR

Q4) a) Classify and explain cybercrimes against property. **[7]**

b) Explain Social Engineering attacks. **[6]**

c) Differentiate between Law and Ethics. **[4]**

P.T.O.

Q5) a) What services are provided by IPSec? What is the difference between tunnel mode and transport mode in IPSec. **[8]**

b) Explain Authentication Header with Diagram. **[6]**

c) Write Short note on Mail Security. **[4]**

OR

Q6) a) What problem was Kerberos designed to address? Describe Kerberos realm. **[8]**

b) Explain X.509 standard for Digital Certificate. **[6]**

c) Differentiate between SSL and IPSec. **[4]**

Q7) a) Explain Intrusion Detection System with Diagram. **[7]**

b) Define and differentiate virus and worms. **[6]**

c) What are the different types of phishing? **[4]**

OR

Q8) a) What is DoS and DDoS attacks? Explain with suitable example. **[7]**

b) Explain Adware and Ransomware. **[6]**

c) Write short note on different ways of password cracking. **[4]**

▽▽▽▽

Total No. of Questions : 8]

SEAT No. :

P7849

[Total No. of Pages : 2

[6181]-399

B.E. (Electronics & Computer Engineering)

DIGITAL IMAGE PROCESSING

(2019 Pattern) (Semester-VII) (410344 D) (Elective-III)

Time : 2½ Hours] *[Max. Marks : 70*

Instructions to the candidates:

1) ***Answer Q1 or Q2, Q3 or Q4, Q5 or Q6, Q7 or Q8.***
2) ***Neat diagrams must be drawn wherever necessary.***
3) ***Assume suitable data, if necessary.***
4) ***Figures to the right side indicate full marks.***

Q1) a) Differentiate between Lossless and Lossy compression? **[6]**

b) Write a short note on Video compression? **[5]**

c) What is data redundancy. Explain any two redundancies in detail. **[6]**

OR

Q2) a) Explain Runlength coding with suitable example. **[6]**

b) Explain Wavelet base compression in detail. **[6]**

c) Explain image compression using JPEG with suitable block diagram. **[5]**

Q3) a) What is Hough transform? How it is used for edge linking? **[9]**

b) Explain the following edge extraction operators. **[9]**

i) Sobel Edge detector

ii) Prewitt Edge detector

iii) DoG

OR

Q4) a) Explain Laplacian Edge defector? Why LOG mask is preferred over Laplacian for edge detection? **[6]**

b) Explain Morphological Operations: Dilation, Erosion, Opening. **[6]**

c) Explain Image Segmentation using: **[6]**

i) Image Region Splitting

ii) Region merging

P.T.O.

Q5) a) Explain in detail Weiner filter for image restoration. **[6]**

b) Differentiate between Image Enhancement and Image Restoration in detail? **[6]**

c) Explain any three types of noise models. **[6]**

OR

Q6) a) Draw and explain Image Degradation Model? **[6]**

b) Explain following filter. **[6]**

i) Adaptive filter

ii) Notch filter

c) Explain in detail - Image Representation, Chain codes and Signatures. **[6]**

Q7) a) Explain Medical application of Image processing. **[6]**

b) Explain any one image classification algorithm. **[6]**

c) Write a short note on image processing application as character recognition? **[5]**

OR

Q8) a) Describe patterns and pattern classes in object recognition'? **[6]**

b) Write a short note on image processing application as Content based Image Retrieval **[6]**

c) What is image classification? Explain minimum distance classifier. **[5]**



Total No. of Questions : 8]

SEAT No. :

P7850

[Total No. of Pages : 2

[6181]-400

B.E. (Electronics & Computer Engineering)

ROBOTICS & AUTOMATION

(2019 Pattern) (Elective-IV) (Semester-VII) (410345A)

Time : 2½ Hours] ***[Max. Marks : 70***

Instructions to the candidates:

1) ***Attempt Q.1 or Q.2, Q.3 or Q.4, Q.5 or Q.6, Q.7 or Q.8.***
2) ***Neat diagrams must be drawn wherever necessary.***
3) ***Figures to the right indicate full marks.***
4) ***Use of calculator is allowed.***
5) ***Assume Suitable data if necessary.***

Q1) a) Explain the significance of Denavit-Hartenberg (D-H) parameters in the kinematic modeling of robotic manipulators. **[6]**

b) Explain the process of obtaining the forward kinematics solution for a PUMA robot. **[6]**

c) Discuss the key components and mathematical steps involved in deriving the transformation matrix from the base frame to the end-effector frame. **[8]**

OR

Q2) a) Define the key terms involved, including joint variables, end-effector position and orientation. **[6]**

b) Discuss the conventions and considerations involved in assigning coordinate frames to the joints and links. **[6]**

c) Provide a numerical example to demonstrate the application of the forward kinematics equations for a specific configuration of a PUMA robot with given joint angles and link lengths. **[8]**

Q3) a) State & explain the general properties of inverse solutions in Inverse Kinematics, specifically addressing the existence and uniqueness of solutions. **[8]**

b) Explain the geometric approach in Inverse Kinematics and how it is utilized to determine joint angles in a robotic system. Define key terms such as end-effector pose, kinematic constraints. **[8]**

OR

P.T.O.

Q4) a) Discuss the formulation and application of Lagrange's Equation to derive the equations of motion for a robotic system. **[8]**

b) Provide examples to illustrate scenarios where inverse solutions may or may not exist and where solutions may or may not be unique. **[8]**

Q5) a) How does the Jacobian matrix differ when considering manipulators with prismatic joints? **[4]**

b) How can the angular velocity be expressed or derived from the transformation matrix and what role does it play in describing the rotational motion of a rigid body? **[6]**

c) Identify & explain a limitation of proportional control in regulating the joint position. **[6]**

OR

Q6) a) Write the significance of including both the motor and load dynamics in the control of the robot arm. **[4]**

b) How is the error signal used in proportional control to adjust the joint position? **[6]**

c) Explore how RMPC and RMRC can be integrated to enhance the overall performance of a robotic manipulator. **[6]**

Q7) a) Write short note on welding types of robotics in details **[9]**

i) Automated Welding

ii) Arc Welding

iii) Spot Welding

b) What are the roles and advantages of Resolver, Rotary shaft encoders, Potentiometers, Tacho-generators in serve control system. **[9]**

OR

Q8) a) Explain selection criteria for stepper motor and D.C. servo motor in electric drive technology. **[9]**

b) What are the different sensors used in servo control system? Explain any two sensors in details. **[9]**



Total No. of Questions : 8]

SEAT No. :

P6778

[Total No. of Pages : 2

[6181] - 401

B.E. (Electronics and Computer Engineering)

HUMAN COMPUTER INTERFACE

(2019 Pattern) (Semester - VII) (410345 B) (Elective - IV)

Time : 2 ½ Hours] *[Max. Marks : 70*

Instructions to the candidates:

1) ***Answer Q.1 or Q.2, Q.3 or Q.4, Q.5 or Q.6, Q.7 or Q8.***
2) ***Neat diagrams must be drawn whenever necessary.***
3) ***Figures to the right side indicate full marks.***
4) ***Assume suitable data if necessary.***

Q1) a) Explain following WIMP interface elements with respect to any text editor. **[6]**

- Icons
- Menus
- Toolbars
- Dialog boxes

b) What is Ergonomics? List and explain different disciplines of Ergonomics. **[6]**

c) Describe different interaction styles used to accommodate dialog between user and computer. **[6]**

OR

Q2) a) Explain theory of User experience by Honeycomb Model. **[6]**

b) Explain paradigms of Interaction design. **[6]**

c) Explain the context of interaction with an example? **[6]**

Q3) a) What is a prototype? Explain different types of prototyping techniques in detail. **[9]**

b) List out five main design frameworks in HCI. Explain Wire framing and MVC framework in detail. **[8]**

OR

P.T.O.

Q4) a) Explain UI layer and its execution framework. **[9]**

b) What are different types of scenarios? Write scenarios for purchasing an airline ticket. **[8]**

Q5) a) Discuss Shneiderman's 8 golden rules of interface design with an example. **[9]**

b) What are the goals of evaluation? Explain Evaluation through Expert Analysis. **[8]**

OR

Q6) a) What is Usability? Explain the principles that support Usability. **[9]**

b) Explain Nielsen's ten heuristics. **[8]**

Q7) a) Explain Keystroke-Level-Model (KLM). **[9]**

b) Discuss applications meant for computer-mediated communication. **[9]**

OR

Q8) a) A Hierarchical Task Analysis (HTA) provides an understanding of the tasks users need to perform to achieve a certain goal. Perform HTA of the task to cook food(rice). Illustrate using diagram. **[9]**

b) List out different Diagrammatic Dialog Design notations. Explain State Charts with an example. **[9]**

❄ ❄ ❄

Total No. of Questions : 8]

SEAT No. : ____

P7851

[Total No. of Pages : 2

[6181]-402

B.E. (Electronics & Computer Engineering)

DIGITAL SYSTEM DESIGN

(2019 Pattern) (Elective-IV) (Semester-VII) (410345C)

Time : 2½ Hours] ***[Max. Marks : 70***

Instructions to the candidates:

1) ***Attempt Q.1 or Q.2, Q.3 or Q.4, Q.5 or Q.6, Q.7 or Q.8.***
2) ***Figures to the right indicate full marks.***
3) ***Assume Suitable data if necessary.***
4) ***Neat diagram must be drawn wherever necessary.***

Q1) a) Sketch Y-Chart representation of Verilog construct supporting synthesis activity. Explain the logical synthesis in detail. **[9]**

b) F= abc + abd + a'c'd' + b'c'd' Apply Espresso operation of decomposition in the above Boolean equation of F. Also sketch the schematic of function F before decomposition and after decomposition. **[8]**

OR

Q2) a) Explain with suitable example about Synthesis of sequential logic with latches. **[9]**

b) Explain with suitable example about Registered logic. **[8]**

Q3) a) Sketch the state machine controllers for a datapath. Explain in detail about partitioning sequential machines into a datapath. **[9]**

b) Sketch architecture and state transition graph of a synchronous 4-bit binary counter with proper explanation. **[8]**

OR

Q4) a) Explain in detail about RISC stored-program machine. **[9]**

b) Explain in detail about UART. **[8]**

P.T.O.

Q5) a) Explain in detail about various storage devices used in Programmable logic devices. **[9]**

b) Sketch the design flow for algorithm based synthesis of sequential machine. Explain in detail about Pipelined Adder. **[9]**

OR

Q6) a) Sketch the circuit diagram and explain the operation of Programmable Logic Array (PLA). **[9]**

b) Explain in detail about clock domains Synchronization for an Asynchronous FIFO. **[9]**

Q7) a) Explain in detail about Postsynthesis Design Validation with example. **[9]**

b) Explain the boundary scan and JTAG ports. Also explain the operation of JTAG modes of operation. **[9]**

OR

Q8) a) Explain in details System Tasks for Timing Verification. **[9]**

b) Explain with suitable example of Circuit defect and faults. **[9]**



Total No. of Questions : 8]

SEAT No. : ____

P7852

[Total No. of Pages : 2

[6181]-403

B.E. (Electronics & Computer Engineering)

AUGMENTED AND VIRTUAL REALITY

(2019 Pattern) (Semester-VII) (Elective-IV) (410345D)

Time : 2½ Hours] ***[Max. Marks : 70***

Instructions to the candidates:

1) ***Attempt Q.1 or Q.2, Q.3 or Q.4, Q.5 or Q.6, Q.7 or Q.8.***
2) ***Figures to the right indicate full marks.***
3) ***Assume Suitable data if necessary.***
4) ***Neat diagrams must be drawn wherever necessary.***

Q1) a) What are the problems with haptic technology? **[5]**

b) Explain the main objectives of virtual worlds? **[6]**

c) List and explain the feature of the virtual world? **[6]**

OR

Q2) a) What is representation of virtual world explain in detail? **[5]**

b) What are the two types of rendering? Explain any one in details. **[6]**

c) Explain the commonly used haptic devices in details. **[6]**

Q3) a) What is the importance of virtual reality in our daily life? **[5]**

b) What are the different Substance of the Virtual World? **[6]**

c) Explain the following terms **[6]**

i) Interacting with Others-Shared Experience,

ii) Collaborative Interaction

OR

Q4) a) How will virtual reality change the way we interact with the world? **[5]**

b) List and explain the device is used to experience virtual reality? **[6]**

c) Explain how to Interacting with the VR System **[6]**

P.T.O.

Q5) a) Explain the concepts of marker-based and marker less tracking in AR **[5]**

b) List and explain the main benefits of AR? **[6]**

c) How does AR works? Explain. **[7]**

OR

Q6) a) Compare between virtual reality and AR? **[5]**

b) Explain, what are the different constraints affect a mobile AR experience? **[6]**

c) Explain why augmented reality is the best? **[7]**

Q7) a) Explain Mobile Augmented Reality. **[5]**

b) Explain how does augmented reality work on mobile? **[6]**

c) Explain how does virtual reality help to make work experiences more? **[7]**

OR

Q8) a) Explain the different software component of Augmented system required for Reality Systems. **[5]**

b) Explain Software Tools for Content Creation **[6]**

c) Explain in brief description of how virtual reality works? **[7]**



Total No. of Questions : 8]

SEAT No. :

P6779

[Total No. of Pages : 2

[6181]-404

B.E. (AI & DS)

MACHINE LEARNING

(2019 Pattern) (Semester - VII) (417521)

Time : 2½ Hours] *[Max. Marks : 70*

Instructions to the candidates:

1) ***Answer Q1 or Q2, Q3 or Q4, Q5 or Q6, Q7 or Q8.***
2) ***Neat diagrams must be drawn wherever necessary.***
3) ***Figures to right indicate full marks.***

Q1) a) Apply K-Nearest Neighbor Algorithm (KNN) on following data. Predict the student result for values physics = 6 marks, Chemistry = 8 marks. Consider number of neighbours K = 3 and Euclidean Distance as distance measure. **[12]**

Physics (marks)	Chemistry (marks)	Results
4	3	Fail
6	7	Pass
7	8	Pass
5	5	Fail
8	8	Pass

b) Explain support Vector Machine classification algorithm with suitable example. **[6]**

OR

Q2) a) Explain any 4 evaluation measures of Binary classification with example? **[6]**

b) Explain construction of multi-classifier. **[6]**

i) One Vs. All approach

ii) One Vs One approach

c) Differentiate between Binary - vs - Multiclass Classification. **[6]**

P.T.O.

Q3) a) Explain K - Means clustering algorithm and states the advantages and disadvantages of k-means clustering algorithm. **[9]**

b) Explain Gaussian mixture model with example. **[8]**

OR

Q4) a) Elaborate need of clustering and explain how the elbow method is used to decide the value of cluster k. **[9]**

b) Explain Divisive Hierarchical clustering (DHC) algorithm with example. **[8]**

Q5) a) Differentiate the Bagging and Boosting approach of ensemble learning. **[6]**

b) Explain different types of voting mechanisms in ensemble learning. **[6]**

c) Explain AdaBoost algorithm in detail. **[6]**

OR

Q6) a) Compare Homogeneous and Heterogeneous ensemble methods. **[6]**

b) What is the ensemble learning? Explain any two ensemble learning techniques. **[6]**

c) Explain random forest ensembles with an example. **[6]**

Q7) a) Explain following terms: **[8]**

i) Markov Property

ii) Bellman Equation

iii) Markov Reward Process

iv) Markov Chain

b) Explain Q-Learning algorithm with an example. **[9]**

OR

Q8) a) What is Reinforcement Learning? Explain the real time applications of reinforcement learning. **[8]**

b) Explain following terms : **[9]**

i) Supervised Learning.

ii) Unsupervised Learning.

iii) Reinforcement Learning.



Total No. of Questions : 8]

SEAT No. :

P-7863

[Total No. of Pages : 2

[6181]-405

B.E. (Artificial Intelligence and Data Science)

DATA MODELING AND VISUALIZATION

(2019 Pattern) (Semester - VII) (417522)

Time : 2½ Hours] ***[Max. Marks : 70***

Instructions to the candidates :

1) ***Answer Q.1 or Q.2, Q.3 or Q.4, Q.5 or Q.6, Q.7 or Q.8.***
2) ***Neat diagrams must be drawn wherever necessary.***
3) ***Figures to the right side indicate full marks.***
4) ***Assume suitable data if necessary.***

Q1) a) Explain need of Graphics and computing in data visualization. How exploratory graphics is useful in visualization. **[10]**

b) Write a short note on Statistical Historiography in data visualization. **[8]**

OR

Q2) a) Explain data handling in data modeling and visualization. **[10]**

b) Explain the types of Data Visualization with suitable example. **[8]**

Q3) a) Discuss various functions available in matplotlib. **[7]**

b) Explain effective graph layout techniques in data visualization. **[6]**

c) Differentiate Force-directed Techniques and Multidimensional Scaling. **[4]**

OR

Q4) a) Explain in detail force-directed techniques in multidimensional Scaling. **[7]**

b) Explain Bipartite Graph and its applications. **[6]**

c) Describe the key steps involved in the process of data wrangling. **[4]**

P.T.O.

Q5) a) Describe in detail data aggregation with its importance for group operations. **[8]**

b) Explain Group by Mechanics technique in data modeling and visualization. **[6]**

c) Explain the steps involved in Split Apply Combine strategy. **[4]**

OR

Q6) a) Explain Cross Tabulation and its uses with suitable example. **[8]**

b) Write a short note on (Any Two) **[10]**

i) Data Aggregation

ii) Pivot Tables

iii) Periods and Periods Arithmetic

Q7) a) Discuss Data Reconstruction and its types in data modeling and visualization. **[7]**

b) Explain ultrasound images and its applications in data modeling and visualization. **[6]**

c) Explain Dbschema Pro Modeler in data modeling and visualization. **[4]**

OR

Q8) a) Write a short note on :- **[7]**

i) PET Images

ii) Magnetic Resonance Images

b) Explain ER/Studio with its applications. **[6]**

c) Explain SQL Database Modeler in data modeling and visualization. **[4]**

▽▽▽▽

Total No. of Questions : 8]

SEAT No. :

P6780

[Total No. of Pages : 2

[6181]-406

B.E. (Artificial Intelligence and Data Science)

QUANTUM ARTIFICIAL INTELLIGENCE

(2019 Pattern) (Semester - VII) (417523A) (Elective - III)

Time : 2½ Hours] *[Max. Marks : 70*

Instructions to the candidates:

1) ***Solve questions Q.1 or Q.2, Q.3 or Q.4, Q.5 or Q.6, Q.7 or Q.8.***
2) ***Neat diagrams must be drawn wherever necessary.***
3) ***Figures to the right indicate full marks.***
4) ***Assume suitable data if necessary.***

Q1) a) Describe Shor's Algorithm with example. **[6]**

b) Explain Simon's Algorithm. **[6]**

c) Explain Factoring Integers, with example. **[6]**

OR

Q2) a) Describe Grover's Algorithm with example. **[6]**

b) Discuss analysis of Deutsch algorithm in details. **[6]**

c) Write a short note on: Phase Kick-Back. **[6]**

Q3) a) Explain in details quantum support vector machines. **[6]**

b) Explain Nearest Neighbour Search in detail. **[6]**

c) Explain in detail - Quantum Boosting. **[6]**

OR

Q4) a) Write a short note on: Variational Quantum Algorithms. **[6]**

b) Explain Quantum Neural Networks. **[6]**

c) Describe classification in quantum machine learning with examples. **[6]**

Q5) a) What are some practical challenges and limitations associated with error model encoding in quantum computing. **[6]**

b) Describe Quantum Key Distribution in short. **[6]**

c) Discuss the Classical Three-Bit Code. **[5]**

OR

P.T.O.

Q6) a) Explain in short Quantum Dense Coding. **[6]**

b) Discuss in detail Quantum cryptography. **[6]**

c) Write a short Note on Fault Tolerance. **[5]**

Q7) a) Write short note on Quantum Walk. **[6]**

b) Explain Quantum Neural Computation. **[6]**

c) Write a short note on Quantum Tree Search. **[5]**

OR

Q8) a) State the challenges and limitations are associated with quantum computing in data sciences. **[6]**

b) Explain Quantum Production System in detail. **[6]**

c) Describe the Heuristic Search with example. **[5]**



Total No. of Questions : 8]

SEAT No. :

P6781

[Total No. of Pages : 2

[6181]-407

B.E. (Artificial Intelligence and Data Science)

INDUSTRIAL INTERNET OF THINGS

(2019 Pattern) (Semester - VII) (417523B) (Elective - III)

Time : 2½ Hours] *[Max. Marks : 70*

Instructions to the candidates:

1) ***Solve questions Q.1 or Q.2, Q.3 or Q.4, Q.5 or Q.6, Q.7 or Q.8.***
2) ***Neat diagrams must be drawn wherever necessary.***
3) ***Figures to the right indicate full marks.***
4) ***Assume suitable data if necessary.***

Q1) a) Describe the functions of the following IIoT components: **[6]**

i) Sensors

ii) Gateways

iii) Routers

b) What is a cloud broker and why is it used in IIoT? **[6]**

c) How can WSNs be used to collect data from industrial environments? **[6]**

OR

Q2) a) Describe the functions of the following IIoT components: **[6]**

i) Modems,

ii) Cloud brokers

iii) Servers

b) Explain the difference between a sensor and a transducer. **[6]**

c) Explain the importance of data filtering and aggregation at the IIoT sensing layer. **[6]**

Q3) a) Explain how IIoT cloud platforms can be used to enable remote monitoring and control of industrial assets. **[6]**

b) Compare and contrast the different features of leading IIoT cloud platforms (e.g. Predix, PTC ThingWorx, Microsoft Azure). **[6]**

c) Describe the process of designing and developing a digital twin. **[6]**

OR

P.T.O.

Q4) a) Identify the key factors to consider when choosing an IIoT cloud platform. **[6]**

b) Discuss the challenges and benefits of using an IIoT cloud platform to implement a digital twin. **[6]**

c) Assess the security and privacy challenges associated with IIoT cloud platforms. **[6]**

Q5) a) Compare and contrast different message integrity protection mechanisms for IIoT systems. **[9]**

b) Select and implement an appropriate identity establishment mechanism for a given IIoT application. **[8]**

OR

Q6) a) Describe how to ensure the integrity of messages in a given IIoT system. **[9]**

b) Define the following IIoT security components: **[8]**

i) identity establishment

ii) access control

iii) non-repudiation

iv) availability

Q7) a) Explain how smart robots can be used to improve the efficiency and productivity of industrial processes. **[9]**

b) Assess the challenges and benefits of implementing cyber manufacturing systems in different industries. **[8]**

OR

Q8) a) Describe the concept of Industry 5.0 (Society 5.0). How does it build upon Industry 4.0, and what new societal challenges and opportunities does it aim to address? **[9]**

b) Define the terms : **[8]**

i) smart metering

ii) smart irrigation

iii) smart office

iv) smart logistics

✪ ✪ ✪

Total No. of Questions : 8]

SEAT No. :

P6782

[Total No. of Pages : 2

[6181]-408

B.E. (Artificial Intelligence and Data Science)

ENTERPRISE ARCHITECTURE AND COMPONENTS

(2019 Pattern) (Semester - VII) (Elective - III) (417523C)

Time : 2½ Hours] *[Max. Marks : 70*

Instructions to the candidates:

1) ***Solve questions Q.1 or Q.2, Q.3 or Q.4, Q.5 or Q.6, Q.7 or Q.8.***
2) ***Neat diagrams must be drawn wherever necessary.***
3) ***Figures to the right indicate full marks.***
4) ***Assume suitable data if necessary.***

Q1) a) Explain Architecture design principles. **[8]**

b) How to plan successfully your enterprise architecture. What is the role of baseline and target architectures for an enterprise? **[9]**

OR

Q2) a) List out the key phases of the architecture development process? How can organizations ensure the success of their architecture development process? **[9]**

b) Define the term is architecture governance? Explain the key components of architecture governance? **[8]**

Q3) a) What is the role of enterprise information architecture? List and Explain Component Model of the Enterprise Information Architecture. **[9]**

b) Differentiate between Enterprise Information architecture and Data architecture. **[8]**

OR

Q4) a) What is the function of deployment diagram and explain with suitable diagram. **[8]**

b) What is the purpose of using an operational model relationship diagram framework? List out the different tools used to create component diagram. **[9]**

P.T.O.

Q5) a) What are the 3 key features of a metadata? **[9]**

What is metadata management and how does it support effective data governance?

b) Elaborate process of Creating and Implementing a Metadata Strategy. **[9]**

OR

Q6) a) What are the five core functions of master data management? Explain any four functions of master data management. **[9]**

b) What is the purpose of using an operational model relationship diagram framework? List out the different tools used to create component diagram. **[9]**

Q7) a) What is the role of a business Enterprise Architect? **[9]**

What is the difference between business process architect and enterprise architect?

b) Explain Business Process Model for IT Management Based on Enterprise Architecture. **[9]**

What are Enterprise Business Process Analysis Tools?

OR

Q8) a) What is enterprise architecture governance? **[9]**

What are Guiding principles of EA governance?

b) What is enterprise architecture management tools? **[9]**

Explain the resources used for enterprise architecture



Total No. of Questions : 8]

SEAT No. :

P6783

[Total No. of Pages : 2

[6181]-409

B.E. (Artificial Intelligence and Data Science)

BIOINFORMATICS

(2019 Pattern) (Semester - VII) (Elective - III) (417523D)

Time : 2½ Hours] *[Max. Marks : 70*

Instructions to the candidates:

1) ***Answer Q.1 or Q.2, Q.3 or Q.4, Q.5 or Q.6, Q.7 or Q.8.***
2) ***Neat diagrams must be drawn wherever necessary.***
3) ***Figures to the right indicate full marks.***
4) ***Assume suitable data, if necessary.***

Q1) a) Describe the molecular docking process and its role in predicting protein-ligand binding. **[9]**

b) Explain the importance of protein structure prediction in the field of medicine and drug discovery. **[9]**

OR

Q2) a) Compare and contrast homology modeling and threading in terms of their principles, applications, and limitations. Provide examples of scenarios where each method is most effective. **[9]**

b) Select a specific disease and describe how computer-aided drug design has played a role in the discovery and development of a drug for its treatment. Highlight the stages and tools involved in the process. **[9]**

Q3) a) Explain how systems biology has revolutionized drug discovery and development. **[9]**

b) Describe the importance of regulatory networks in the context of cellular responses to environmental changes and internal cues. How do regulatory networks enable cells to adapt to diverse conditions? **[9]**

OR

Q4) a) Explain the importance of network analysis and visualization in understanding complex systems and decision-making processes in various domains, from healthcare to transportation and beyond. **[9]**

b) Discuss the significance of metabolic networks in biotechnology and industrial processes. **[9]**

P.T.O.

Q5) a) Explain the importance of feature selection in the context of classification, and provide an example of a real-world application where feature selection is crucial. **[9]**

b) Explain the primary objectives of dimensionality reduction in data analysis. **[8]**

OR

Q6) a) Describe the main challenge in applying CNNs to gene networks and how this challenge can be addressed. **[9]**

b) Explain the importance of Deep learning in bioinformatics. **[8]**

Q7) a) How does personalized medicine differ from traditional medicine, and what are the main advantages of adopting a personalized approach in patient care? **[9]**

b) Explain the applications of Bioinformatics in detail. **[8]**

OR

Q8) a) How can genetic modification of crops through agricultural biotechnology lead to increased food security and reduced dependence on chemical pesticides? **[9]**

b) What role does artificial intelligence (Al) play in aiding healthcare professionals in disease diagnosis and treatment? **[8]**



Total No. of Questions : 8]

SEAT No. :

P6784

[Total No. of Pages : 2

[6181] - 410

B.E. (AI & DS)

GPU PROGRAMMING AND ARCHITECTURE

(2019 Pattern) (Semester - VII) (417524 A) (Elective - IV)

Time : 2 ½ Hours] *[Max. Marks : 70*

Instructions to the candidates:

1) ***Attempt Q.1 or Q.2, Q.3 or Q.4 Q.5 or Q.6, Q. 7 or Q.8.***
2) ***Figures to the right indicate full marks.***
3) ***Neat diagram must be drawn wherever necessary.***
4) ***Assume suitable data if necessary.***

Q1) a) Explain the importance of error handling in CUDA programmimg. **[6]**

b) Explain the compilation workflow in CUDA using NVCC. **[6]**

c) Define PTX and its role in CUDA programmimg. **[6]**

OR

Q2) a) Describe the compatibility of C++ features with CUDA programming. Discuss any two limitations and challenges in it. **[6]**

b) Describe the tools and techniques available for debugging CUDA programs. **[6]**

c) Define binary compatibility in CUDA and discuss its importance. **[6]**

Q3) a) Explain the parallel programming model in OpenCL. How does OpenCL utilize the concept of work-items and work-groups to achieve parallel execution? **[9]**

b) Discuss the essential tasks that OpenCL host programs perform. **[8]**

OR

Q4) a) Describe the key components of the OpenCL standard, including the host, device,and runtime system. **[9]**

b) Define OpenCL kernels and their role in parallel programming. **[8]**

P.T.O.

Q5) a) What is a heterogeneous cluster in the context of parallel computing? How does it differ from a homogeneous cluster? **[6]**

b) Define the term "runtime-memory footprint" in the context of parallel programming. How does it impact the performance and efficiency of parallel applications? **[6]**

c) Explain Sparse Matrix Multiplication Pattern in GPU. **[6]**

OR

Q6) a) What is dynamic parallelism in GPU computing. **[6]**

b) Explain the importance of load balancing in the implementation of parallel algorithms. **[6]**

c) Explain strategies for reducing the runtime-memory footprint in parallel computing. **[6]**

Q7) a) Explain the OpenCL platform model. What are the key components and their roles in the execution of OpenCL programs? **[9]**

b) Explain Practical Issues in compiling OCL Standalone Execution of OpenCL **[8]**

OR

Q8) a) Explain the difference between training and inferencing in the context of neural networks. **[9]**

b) Define the concept of Transport Triggered Architecture (TTA) and its relationship to OpenCL programming. **[8]**

❄ ❄ ❄

Total No. of Questions : 8]

SEAT No. :

P6785

[Total No. of Pages : 2

[6181] - 411

B.E. (Artificial Intelligence & Data Science)

INFORMATION RETRIEVAL

(2019 Pattern) (Semester - VII) (417524 B) (Elective - IV)

Time : 2 ½ Hours] *[Max. Marks : 70*

Instructions to the candidates:

1) ***Answer Q.l or Q.2, Q.3 or Q.4, Q.5 or Q.6, Q.7 or Q8.***
2) ***Neat diagrams must be drawn wherever necessary.***
3) ***Assume suitable data if necessary.***

Q1) a) Define and explain Probabilistic Retrieval. **[6]**

b) What is the probability ranking principle for interactive information retrieval? **[6]**

c) What is the binary independent retrieval model? **[6]**

OR

Q2) a) What is language modeling approach to information retrieval? **[6]**

b) State and explain different types of Bayesian networks? **[6]**

c) Explain language models? **[6]**

Q3) a) What is the difference between clustering and classification? Can clustering be used for classification purposes? **[6]**

b) What are different types of clustering algorithm? Explain any one of them. **[5]**

c) What are the applications of naive Bayes classifier? **[6]**

OR

Q4) a) What is K nearest neighbor classifier with an illustration in information retrieval? **[6]**

b) What are the different types of agglomerative clustering? **[5]**

c) What is the hypothesis used in the vector space model for classification? **[6]**

P.T.O.

Q5) a) Factors that influence a webpage's PageRank score. **[6]**

b) Explain search engine ranking function? **[5]**

c) What is parallelism in query processing? **[6]**

OR

Q6) a) Define Python library is used for web crawling? **[6]**

b) What are the Main challenges posed by Web? **[5]**

c) Explain the components of focused web crawlers? **[6]**

Q7) a) Explain multimedia IR models? **[9]**

b) What are the four phases of recommeder system? **[9]**

OR

Q8) a) Multimedia Information Retrieval. **[9]**

b) What is the difference between information retrieval and recommender system? **[9]**

❄ ❄ ❄

Total No. of Questions : 8]

SEAT No. : ____

P7853

[Total No. of Pages : 2

[6181]-412

B.E. (AI & DS)

UI/UX DESIGN

(2019 Pattern) (Semester-VII) (Elective-IV) (417524C)

Time : 2½ Hours] ***[Max. Marks : 70***

Instructions to the candidates:

1) ***Attempt Q.1 or Q.2, Q.3 or Q.4, Q.5 or Q.6, Q.7 or Q.8.***
2) ***Figures to the right indicate full marks.***
3) ***Assume Suitable data if necessary.***
4) ***Neat diagram must be drawn wherever necessary.***

Q1) a) Explain different human considerations in design. **[6]**

b) Explain golden rules of Interface design. **[6]**

c) How to evaluate Interface design? **[6]**

OR

Q2) a) Explain with an example Usability testing. **[6]**

b) How do you approach designing for mobile applications? **[6]**

c) What is information architecture and its importance in UI design? **[6]**

Q3) a) What is direct manipulation? Explain different advantages and disadvantages. **[6]**

b) Write a short note on-Phrasing the Menu. **[6]**

c) Differentiate between menu bar and toolbar. **[5]**

OR

Q4) a) Write a short note on-Interaction with natural language. **[6]**

b) Enlist different interaction styles. **[6]**

c) Explain WIMP in detail. **[5]**

P.T.O.

Q5) a) Write a short note on-Selection of controls. **[6]**

b) Explain drop down and pop up list boxes. **[6]**

c) Explain operable controls in detail. **[6]**

OR

Q6) a) What is presentaion control? **[6]**

b) Explain individual windows design and multiple windows design. **[6]**

c) Explain command menus in detail. **[6]**

Q7) a) What is usability testing? **[6]**

b) Explain Cognitive walkthrough in detail. **[6]**

c) Explain different challenges for information visualization. **[5]**

OR

Q8) a) Differentiate between usability testing and user testing. **[6]**

b) Write a short note on Eye tracking and A/B testing. **[6]**

c) Explain Think Aloud protocol in detail. **[5]**



Total No. of Questions : 8] **SEAT No. :**

P6786 **[Total No. of Pages : 3**

[6181]-413

B.E. (Artificial Intelligence and Data Science)

OPTIMIZATION ALGORITHMS

(2019 Pattern) (Elective - IV) (Semester - VII) (417524D)

Time : 2½ Hours] ***[Max. Marks : 70***

Instructions to the candidates:

1) ***Solve Q.1 or Q.2, Q.3 or Q.4, Q.5 or Q.6, Q.7 or Q.8.***
2) ***Neat diagrams must be drawn whenever necessary.***
3) ***Figures to the right indicate full marks.***
4) ***Use of scientific non programmable calculator is allowed.***
5) ***Assume suitable data if necessary.***

Q1) a) In Non Linear Programming the KKT condition test is a necessary condition, explain with justification, **[8]**

b) Consider a geometric programming problem with the following objective function and constraints: Objective Function:

$$minimize\ f(x) = x_1 * x_2/x_3$$ **[1]**

Subect to:

$$x_1 * x_2 * x_3 = 10$$ **[2]**

$$x_1 * x_3 - x^2_2 \geq 4$$ **[3]**

$$x_1, x_2, x_3 \geq 0$$ **[4]**

- Formulate the problem as a geometric programming problem and discuss the properties of the objective function and constraints.
- Describe how to transform this geometric program into a convex optimization problem.
- Solve the problem using appropriate methods and interpret the results.

OR

Q2) a) Given a knapsack with a weight capacity of $W = 15$ and a set of four items: $W = \{3, 4, 5, 6\}$ and $P = \{7, 9, 10, 12\}$ Illustrate how memorization can be used to find the maximum value and the selected items to fill the knapsack. **[10]**

b) Discuss the relationship between quadratic programming and support vector machines (SVMs). Explain how quadratic programming is used in training as SVM and how it helps find the optimal hyperplane that maximizes the margin between classes. Provide an example of a binary classification problem and explain how to set up and solve the quadratic programming problem for SVM training. **[8]**

P.T.O.

Q3) a) Agenetic algorithm is applied to solve a system of linear equations. The system of equations is represented as follows: **[9]**

$$2x + 3y - z = 10$$

$$4x - 2y + 3z = 5$$

$$5x + y + 2z = 15$$

How would you evaluate the fitness of candidate solutions? Provide a step-by-step explanation of how the genetic algorithm would be applied to find a solution for this system.

b) Explain the simulated annealing algorithm and its application in solving optimization problems. Describe the key components of the algorithm, including the initial solution, temperature schedule, neighbor generation, and acceptance criteria. Provide a step-by-step example of applying simulated annealing to solve a well-defined optimization problem. Discuss how the temperature schedule affects the search process and convergence to the optimal solution. **[8]**

OR

Q4) a) Discuss the adaptation and parameter tuning in Particle Swarm Optimization using mathematical concepts. Explain the significance of adjusting parameters like the inertia weight, acceleration coefficients, and population size to improve the performance of the algorithm, and illustrate how these adjustments can be made mathematically. Provide mathematical examples of how parameter tuning can impact the convergence and solution quality in PSO. **[9]**

b) Explain the mathematical foundations of swarm behavior and how it can be applied to solve complex problems. Use the principles of swarm intelligence and provide a detailed example with mathematical notations to illustrate the behavior of a swarm in solving an optimization problem.**[8]**

Q5) a) In the context of multiobjective optimization, discuss the concept of Pareto optimality and its significance. Provide a detailed explanation of how Pareto optimality is defined and mathematically characterized. **[10]**

b) Consider the following minimization problem: **[8]**

$$\text{Minimize } f(x) = x^2$$

Where $-5 \leq x \leq 5$ Describe the conditions under which the Differential Evolution algorithm can be terminated. What defines the stopping criteria for the optimization process?

OR

Q6) a) Consider the following minimization problem: Minimize the Rosenbrock function: **[10]**

$f(x, y) = (1 - x)^2 + 100 * (y - x^2)^2$

Where $-5 \leq x \leq 5$ and $-5 \leq y \leq 5$ Discuss a real-world scenario or problem where APSO can be applied. Explain how APSO's acceleration coefficients and updates can be adapted to address specific optimization challenges.

b) Explain the ant movement rules and path selection probabilities, including the pheromone-based probability and the heuristic information. Provide mathematical formulas and illustrate how ants construct their solutions.**[8]**

Q7) a) Consider the following minimization problem: Minimize the Ackley functions: **[9]**

$$f(x, y) = -20 \times e^{\left(\frac{-0.2 \times sqrt\left(x^2 + y^2\right)}{2}\right)} - e^{\left(\frac{\left(\cos(2\Pi x) + \cos(2\Pi y)\right)}{2}\right)} + 20 + e$$

where $-5 \leq x \leq 5$ and $-5 \leq y \leq 5$ Analyze the convergence properties of STFA. Explain how STFA aims to converge to the optimal solution and disucss factors that affect convergence speed and quality.

b) Discuss and illustrate with mathematical examples a comprehensive framwork for self-tuning algorithms. Explain the key components, mathematical foundations, and practical applications of such a framework. Additionally, explore the importance of self-tunning mechanisms and their role in optimizing algorithm behavior. Provide insights into real-world scenarios where self-tuning algorithm can be effectively applied, and analyze the advantages and challenges associated with using self-tuning frameworks in those contexts. **[8]**

OR

Q8) a) Consider the following minimization problem: Minimize the Griewank function: **[9]**

$$f(x, y) = 1 + \frac{\left(x^2 + y^2\right)}{4000} - \left(\cos(x) \times \cos\left(\frac{y}{\sqrt{2}}\right)\right)$$

where $-600 \leq x \leq 600$ and $-600 \leq y \leq 600$ Analyze the convergence properties of the Bat Algorithm. Explain how the algorithm aims to converge to the optimal solution and the factors influencing convergence speed and solution qualaity.

b) Write down the application areas where firefly algorithm can be used. Explain one application in detail. **[8]**

Total No. of Questions : 8]

SEAT No. :

P6787

[Total No. of Pages : 2

[6181]-415

B.E. (Mechatronics Engineering)

ROBOT OPERATING SYSTEM

(2019 Pattern) (Semester - VII) (417541) (Theory)

Time : 2½ Hours] *[Max. Marks : 70*

Instructions to the candidates:

1) ***Solve Q1 or Q2, Q3 or Q4, Q5 or Q6, Q7 or Q8.***
2) ***Neat diagrams must be drawn wherever necessary***
3) ***Figures to the right indicate full marks.***
4) ***Assume Suitable data if necessary.***

Q1) a) Classify the Robot Programming language based on generation. Explain each generation in detail. **[10]**

b) Explain the following statements: **[3]**

i) PROMPT "text", INDEX

ii) TYPE "text"

iii) GOTO 10

c) Explain the purpose of the operating system and modes of operation in the Robot language structure. **[5]**

OR

Q2) a) Explain the various components of the Robot language structure that are coordinated with the help of diagrams. **[6]**

b) Write any six commonly used monitor mode commands and explain each of them. **[6]**

c) Write and explain all the commands for logarithmic, exponential and similar functions. **[6]**

Q3) a) Write a program control statement, constants and Variables for AML. **[5]**

b) Write a subroutine in Rapid language for Industrial Robot. **[5]**

c) What is MOVE Master command language? Write the syntax and explain each line syntax in detail. **[7]**

OR

P.T.O.

Q4) a) Explain the sensor commands and motion control for the AML language. **[5]**

b) Write the program control statements and functions for the AML language. **[5]**

c) Write the motion instructions for Pick and Place using Industrial Robot. **[7]**

Q5) a) Explain Robot Studio, collision detection and Robot economics. **[5]**

b) Explain Jogging and robot components in Robot Studio. **[5]**

c) Write the process chart to demonstrate the issue and potential solutions of multiple robot and machine interference in a virtual robotics environment. **[8]**

OR

Q6) a) What is soft Robotics? Explain it with the application. **[5]**

b) Explain work planning and Program module for Robot Studio. **[5]**

c) Explain input and output signals in Robot Studio. **[8]**

Q7) a) What is simulation? Explain the steps involved in simulation. **[5]**

b) Explain different types of Simulation. **[5]**

c) What do you understand by Analog and Hybrid Simulation? **[7]**

OR

Q8) a) Write the advantages and disadvantages of simulation. **[10]**

b) What is the Monte Carlo method? Explain. **[7]**



Total No. of Questions : 8]

SEAT No. :

P7854

[Total No. of Pages :2

[6181]-416
B.E. (Mechatronics Engineering)
DATA COMMUNICATION
(2019 Pattern) (Semester-VII) (417542)

Time : 2 ½ Hours] *[Max. Marks : 70*

Instructions to the candidates:

1) ***Solve Q.1 or Q.2, Q.3 or Q.4, Q.5 or Q.6, Q.7 or Q.8.***
2) ***Assume suitable data, if necessary.***
3) ***Use of electronic pocket calculator is allowed.***
4) ***Neat diagrams must be drawn wherever necessary.***

Q1) a) What is frequency modulation? Explain in details mathematical model for FM. **[8]**

b) Explain the following terms: **[9]**

i) Frequency Deviation

ii) Deviation Sensitivity

iii) Bandwidth Required for FM

OR

Q2) a) Explain in details Pre-emphasis and De-emphasis **[8]**

b) Compare Frequency Modulation and Phase Modulation **[9]**

Q3) a) Explain the following modulation Techniques **[8]**

i) BFSK

ii) QPSK

b) Explain in details Pulse Desperation, Coherent and non-coherent **[9]**

OR

Q4) a) Write a short note on QASK. **[8]**

b) Explain in details Differentially Encoded BPSK and DQPSK **[9]**

P.T.O.

Q5) a) Define Antenna. Explain the different parameters of antenna. **[9]**

b) Write short note on. **[9]**

i) Reciprocity Principle

ii) Helical Antenna

OR

Q6) a) Explain wave Tilt and Surface waves with their types. **[9]**

b) Explain the relation from small loops and its radiation resistance. **[9]**

Q7) a) Explain the cellular system. Give its advantages, disadvantages and applications **[9]**

b) Explain different types of propagation models for wireless network. **[9]**

OR

Q8) a) Write a short note on multipath effect in Mobile Communications also state the parameters for the same. **[9]**

b) Explain the following systems with their advantages, disadvantages and applications. **[9]**

i) 1G

ii) 2.5G



Total No. of Questions : 8]

SEAT No. : ____

P8659

[Total No. of Pages : 2

[6181] - 417

B.E. (Mechatronics Engineering)

MICRO ELECTRO MECHANICAL SYSTEMS

(2019 Pattern) (Semester - VII) (417543)

Time : 2 ½ Hours] ***[Max. Marks : 70***

Instructions to the candidates:

1) ***Solve Q.l or Q.2, Q.3 or Q.4, Q.5 or Q.6, Q.7 or Q8.***
2) ***Neat diagrams should be drawn whenever necessary.***
3) ***Use of non-programmable calculator is allowed.***
4) ***Assume suitable data if necessary.***

Q1) a) Explain in breif the different materials used in MEMS and Micro- Systems. **[8]**

b) Write a short note on Photolithography. Draw neat diagram. **[9]**

OR

Q2) a) With neat diagram explain the process of etching **[9]**

b) Write a short note on LIGA. **[8]**

Q3) a) Write a short note on sealing in geometry in MEMS. **[9]**

b) Explain the concept rigid body dynamics. **[9]**

OR

Q4) a) With neat diagrm the Scaling in electro- magnetic forces. **[9]**

b) Enlist the different types of materials used in Micro-Systems. Explain any one in detail. **[9]**

Q5) a) Explain in detail the Micro- Scopy with some example. **[9]**

b) With neat diagram explain the STM. **[9]**

OR

P.T.O.

Q6) a) With neat diagram explain SEM. **[9]**

b) Explain in detail the different Topography methods with suitable diagram. **[9]**

Q7) a) Explain in detail the Carbon Nano-Tubes. **[9]**

b) Explain the different applications of Carbon Nano- Tubes. **[8]**

OR

Q8) a) Explain in brief the fabrication methods in CNT. **[9]**

b) Write a short- note on Nano- tribolog. **[8]**

❄ ❄ ❄

Total No. of Questions : 8]

SEAT No. :

P6788

[Total No. of Pages : 2

[6181]-418

B.E. (Mechatronics Engineering)

IMAGE PROCESSING & COMPUTER VISION

(2019 Pattern) (Semester - VII) (Elective - III) (417544-A) (Theory)

Time : 2½ Hours] *[Max. Marks : 70*

Instructions to the candidates:

1) ***Solve Q1 or Q2, Q3 or Q4, Q5 or Q6, Q7 or Q8.***
2) ***Neat diagrams must be drawn wherever necessary.***
3) ***Figures to the right indicates full marks.***
4) ***Use of Calculator is allowed.***
5) ***Assume Suitable data if necessary.***

Q1) a) What is texture Descriptor? Explain Local Binary pattern (LBP) in detail. **[8]**

b) Explain Histogram of oriented Gradients with the help of proper example. **[10]**

OR

Q2) a) Given matrix Ix and Iy for an image. **[9]**

Ix=

4	7	6
8	8	7
8	6	5

Iy=

4	8	8
8	6	7
6	6	4

Find out, given area of the image is corner or not using Harris Corner Detection Algorithm.

b) Explain Scale Invariant Feature Transform in detail. **[9]**

Q3) a) What is a Pattern Recognition System? What are components of pattern recognition System. **[5]**

b) Explain Object Detection in Computer Vision. **[5]**

c) What are different parameter Estimation Techniques? Explain Maximum Likelihood Estimation in detail. **[7]**

OR

Q4) a) What is Learning and Adaptation in Machine Learning? **[4]**

b) What is Dimension Reduction? **[5]**

c) Explain Linear Discriminant Analysis in detail. **[8]**

P.T.O.

Q5) a) Give Opencv code for following operation:

i) Accessing and modifying pixel values of an image

ii) Accessing Image properties. **[6]**

b) Give opencv code for following shape drawing functions : **[6]**

i) Circle

ii) Rectangle

c) Explain Image Blurring Technique. Give advantages of Image Blurring. **[5]**

OR

Q6) a) What are Image Contours? Write steps for finding and drawing contours using opencv. **[6]**

b) What are different Arithmetic Operations on Image? Explain Addition of Image. **[6]**

c) Explain Image Thresholding Technique with syntax and syntax explanation. **[5]**

Q7) a) What is Artificial neural network for pattern Classification? **[6]**

b) What is Convolution Neural Networks (CNNs)? **[6]**

c) What are Autoencoders? **[6]**

OR

Q8) a) Give a brief on application of Computer Vision- Motion Estimation. **[9]**

b) Explain Object Tracking in computer vision in detail. **[9]**



Total No. of Questions : 8]

SEAT No. :

P7855

[Total No. of Pages : 2

[6181]-419

B.E. (Mechatronics Engineering)

MEDICAL MECHATRONICS

(2019 Pattern) (Semester-VII) (417544 B) (Elective-III)

Time : 2½ Hours] *[Max. Marks : 70*

Instructions to the candidates:

1) ***Solve Q1 or Q2, Q3 or Q4, Q5 or Q6, Q7 or Q8.***
2) ***Figures to the right side indicate full marks.***
3) ***Neat diagrams must be drawn wherever necessary.***
4) ***Use of calculator is allowed.***
5) ***Assume suitable data if necessary.***

Q1) a) State the significance of Oximeter. Describe the Working Principle of any one type of Oximeter with the neat diagram. **[10]**

b) With the help of neat diagram, Explain the working of any one type of Gas Analyzer with the help of neat diagram. **[7]**

OR

Q2) a) Define Hearing Loss. Draw and Discuss the working principle of Audiometer with the help of block diagram. **[10]**

b) Define Blood Pressure? Compare Indirect (Non-Invasive) and Direct (Invasive) Blood Pressure Measurements. **[7]**

Q3) a) State the role of external devices in the body. Compare Pacemaker and Defibrillator. **[10]**

b) With the help of neat diagram, explain the working of electrosurgical unit with the help of neat diagram. **[8]**

OR

Q4) a) State the role of Pacemaker in the body. With the help of neat diagram, Explain the working of Pacemaker with the help of neat diagram. **[10]**

b) With the help of neat diagram, Explain the working of drug delivery system with the help of neat diagram. **[8]**

P.T.O.

Q5) a) State the advantages of Magnetic Resonance effect in the body. With the help of neat diagram, Explain the working of Magnetic Resonance Imaging with the help of neat diagram. **[10]**

b) With the help of neat diagram, Explain the working of Liquid Crystal Tomography with the help of neat diagram. **[7]**

OR

Q6) a) State the advantages of X-Rays in the body. With the help of neat diagram, Explain the working of Computer Tomography. **[10]**

b) With the help of neat diagram, Explain the working of Bronchoscope with the help of neat diagram. **[7]**

Q7) a) State the concept of micro shock and macroshock hazard. With the help of neat diagram, Explain the concept of EMI/RFI Interference. **[10]**

b) With the help of neat diagram, Explain the working of Wireless and multi patient Telemetry with the help of neat diagram. **[8]**

OR

Q8) a) State the role of database in HIS. With the help of neat diagram, Explain the working of HIS System with the help of neat diagram. **[10]**

b) Elaborate the concept of Networking in HIS with the help of neat diagram. **[8]**



Total No. of Questions : 8]

SEAT No. :

P-7837

[Total No. of Pages : 2

[6181]-421

B.E. (Mechatronics)

PRODUCT DESIGN & DEVELOPMENT

(2019 Pattern) (Semester - VII) (417545A) (Elective - IV)

Time : 2½ Hours] ***[Max. Marks : 70***

Instructions to the candidates :

1) ***Answer Q. No. 1 or 2, Q. No.3 or 4, Q. No. 5 or 6, Q. No. 7 or 8.***
2) ***Neat diagrams must be drawn wherever necessary.***
3) ***Figures to the right indicate full marks.***

Q1) a) Explain Pugh's Concept Selection Chart with suitable concept. **[9]**

b) Discuss the process of Concept Embodiment. **[8]**

OR

Q2) a) Explain Subtract and Operate procedure with suitable example. **[9]**

b) Write short notes on: **[8]**

i) Lateral thinking

ii) Morphological Analysis of Product

Q3) a) Discuss the stepwise process of Benchmarking. **[9]**

b) What is Product Portfolio? Explain the types of Product Portfolio Architecture. **[9]**

OR

Q4) a) What is Product Architecture? Explain any two product architectures. **[9]**

b) Define Product Specifications. Discuss the process of setting product specifications with example. **[9]**

Q5) a) Elaborate the local, regional and global issues for Environment. **[9]**

b) Explain need of design for manufacture and assembly [DFMA] with advantages. **[8]**

OR

P.T.O.

Q6) a) What are the causes of Unreliability? How the reliability can be improved? **[8]**

b) Discuss the Design Failure mode effect analysis in detail. **[9]**

Q7) a) Describe the scope and benefits of product lifecycle management [PLM]. **[9]**

b) Explain the applications of PLM in various fields. **[9]**

OR

Q8) a) Write the benefits and features of Product Data Management. **[9]**

b) Discuss the concept of product data and product workflow in PLM. **[9]**



Total No. of Questions : 8]

SEAT No. :

P-8660

[Total No. of Pages : 2

[6181]-423
B.E. (Mechatronics Engineering)
INDUSTRY 4.0
(2019 Pattern) (Semester - VII) (417545C) (Elective-IV)

Time : 2½ Hours] ***[Max. Marks : 70***

Instructions to the candidates :

1) ***Solve Q1 or Q2, Q3 or Q4, Q5 or Q6, Q7or Q8.***
2) ***Figures to the right indicate full marks.***
3) ***Neat diagrams must be drawn, wherever necessaty.***
4) ***Use of non-programmable calculator is allowed.***

Q1) a) Write a note on Vanadium Redox Batteries. **[6]**

b) Explain in brief Compressed Air Energy Storage. **[6]**

c) Discuss the potential of Sodium-Sulphur Battery Energy Storage to Enable Integration of Wind. **[6]**

OR

Q2) a) Explain Variable Renewable Electricity Sources. **[6]**

b) Explain in brief Pumped Hydro Storage. **[6]**

c) Explain V2G Capacity Estimation algorithm in detail. **[6]**

Q3) a) Explain concept of Self-Healing Grid. **[6]**

b) State the Functions of different Smart Grid Components. **[6]**

c) Explain the different Challenges faced by Smart Grid Technology. **[5]**

OR

Q4) a) What is smart energy metering? Explain in brief. **[6]**

b) Explain in brief Smart meter and communications solutions for Smart Grid. **[6]**

c) Describe the Security challenges faced in smart grid and Industry 4.0 integration. **[5]**

P.T.O.

Q5) a) Describe the concept of Smart Driving Systems in Smart Car. **[6]**

b) Explain in brief different Levels of Automation in Self Driving Car. **[6]**

c) Write in brief about RF Technology. **[6]**

OR

Q6) a) Write a note on Google's Self-Driving Car. **[6]**

b) Explain the Pros and Cons of Self Driving Cars. **[6]**

c) Describe the concept of Smart Entertainment. **[6]**

Q7) a) What are the different types of actuators used in IoT? Explain in brief. **[6]**

b) How the concept of IOT evolved? Explain. **[6]**

c) Write a note on Raspberry Pi. **[5]**

OR

Q8) a) What are General Opportunities and Challenges faced in Industry 4.0. **[6]**

b) What are the different sensors used in IoT? Explain in brief. **[6]**

c) Define IIOT. Explain about Arduino used in IoT. **[5]**

Total No. of Questions : 10]

SEAT No. : ____

P9276

[Total No. of Pages : 2

[6181]-501

B.E. (Chemical Engineering)

PROCESS MODELING AND SIMULATION

(2015 Pattern) (Semester-II) (409349)

Time : 2½ Hours] ***[Max. Marks : 70***

Instructions to the candidates:

1) ***Answer Q.1 or Q.2, Q.3 or Q.4, Q.5 or Q.6, Q.7 or Q.8 and Q.9 or Q.10.***
2) ***Figures to the right indicate full marks.***
3) ***Assume Suitable data if necessary.***
4) ***Neat diagram must be drawn wherever necessary.***

Q1) a) Define Process model? Give the classification of model with examples. **[5]**

b) Explain the concept of dynamic behavior of system with respect to law of conservation of Mass and energy with equations. **[5]**

OR

Q2) a) Explain in short, the four different phases of model building. **[5]**

b) Explain the terms-Lumped parameter system and distributed parameter system. Give example of each. **[5]**

Q3) a) Develop the modeling equation for the shell and tube heat exchanger. **[5]**

b) Develop modeling equation of continuity with figure. **[5]**

OR

Q4) a) Develop the mathematical model for triple effect evaporator. **[5]**

b) Derive the model equation cooling tower. **[5]**

Q5) a) Develop the modeling equation for the flash distillation column. **[8]**

b) Draw a model to show a stage extraction and write all notations, assumptions and important parameters need to consider during modeling of extractor. **[8]**

OR

Q6) a) Draw a model to show a dryer and write all notations, assumptions and important parameters to be considered during modeling of tray dryer. **[8]**

b) Derive the model equation for continuous binary distillation in tray column. **[8]**

P.T.O.

Q7) a) Develop the modeling equation for the following Plug Flow Reactor by considering axial position. **[9]**

b) Develop the state model for the batch mixing of two solutions. Initially the tank is empty. The volume of tank is V m^3. The flow rates are volumetric (Fl & F2) and the concentrations (CAl, CB 1 & CA2, CB2) are in mol/vol. **[9]**

i) How long does it take to fill up the tank.

ii) Show how would you find the composition & temperature of the mixture in the tank during the same time that the tank is being filled up. Assume that the heat of solution depends on the composition.

OR

Q8) a) Derive a mathematical model for the CSTR reactor in which the first order consecutive reactions A $\rightarrow$ B $\rightarrow$ C (k1, k2, k3 rate constant) takes place to get the product B. **[9]**

b) Derive the model equation for trickle bed reactor. **[9]**

Q9) a) Briefly explain any one numerical method to solve the differential equations. **[8]**

b) Give the scope of process modeling & simulation with an example. **[8]**

OR

Q10)a) Derive the model equation for effluents treatment reactor. **[8]**

b) Explain utilization of CHEM-CAD Software in modeling and simulation in detail. **[8]**



Total No. of Questions : 10]

SEAT No. :

P9277

[Total No. of Pages :2

[6181]-502
B.E. (Civil)
ENVIRONMENTAL ENGINEERING-II
(2015 Pattern) (Semester-I) (401001)

Time : 2½ Hours] *[Max. Marks : 70*

Instructions to the candidates:

1) ***Attempt Q.1 or Q.2, Q.3 or Q.4, Q.5 or Q.6, Q.7 or Q.8, and Q.9 or Q.10.***
2) ***Figures to the right indicates full marks***
3) ***Draw neat sketches wherever necessary***
4) ***Assume any missing data if necessary***
5) ***Use of scientific calculators is allowed***

Q1) a) Compare water carriage system with conservancy system. **[5]**

b) What is sewage? What are the sources of sewage? **[5]**

OR

Q2) a) What do you understand by self-purification of natural streams? Enlist the factors affecting. **[5]**

b) Enlist the various laboratory tests to be conducted on wastewater sample. Explain the significance of any one. **[5]**

Q3) a) Explain the role played by following treatment units. Also draw a cross-section of circular sedimentation tank. **[5]**

i) Screen chamber

ii) Grit Chamber

iii) Primary Sedimentation tank

b) Draw a treatment flow sheet of a conventional wastewater treatment plant. Highlight the treatment units generating sludge. **[5]**

OR

Q4) a) What is the importance of microorganisms in waste water treatment systems **[5]**

b) What is sludge volume index? Explain its significance. **[5]**

P.T.O.

Q5) a) What is an oxidation pond? Explain with sketch the concept of algal-bacterial symbiosis in oxidation ponds. **[8]**

b) What is an Aerated Lagoon? Explain the advantages and disadvantages of Aerated lagoons? **[8]**

OR

Q6) a) Explain the theory of phytoremediation technology and root zone cleaning system for wastewater treatment. **[8]**

b) What are the design considerations of oxidation pond as per the manual of CPHEEO. **[8]**

Q7) a) Explain the working principle, advantages and disadvantages of package sewage treatment plant. **[8]**

b) Explain the principle, stages of anaerobic digestion, and factors governing anaerobic digestion of sludge. **[8]**

OR

Q8) a) What do you understand by sludge dewatering? Explain in detail dewatering of sludge by gravity thickener. **[8]**

b) Explain the principle, advantages & disadvantages of Up-flow Anaerobic Sludge Blanket (UASB) Reactor. **[8]**

Q9) a) Explain the different methods of sampling of wastewater? Also explain the necessity of equalization tank and neutralization tank. **[9]**

b) Explain with sketch the treatment flow sheet of dairy industry wastewater. Also mention the wastewater characteristics. **[9]**

OR

Q10)a) Write a note on primary and secondary treatment for industrial wastewater as per the CPCB norms. **[9]**

b) Explain with sketch the treatment flow sheet of distillery industry wastewater. Also mention the wastewater characteristics. **[9]**



Total No. of Questions : 10]

SEAT No. : ____

P9278

[Total No. of Pages : 2

[6181]-503
B.E. (Civil)
TRANSPORTATION ENGINEERING
(2015 Pattern) (Semester - I) (401002)

Time : 2½ Hours] ***[Max. Marks : 70***

Instructions to the candidates:

1) ***Answer Q.1 or Q.2, Q.3 or Q.4, Q.5 or Q.6, Q.7 or Q.8, Q.9 or Q.10.***
2) ***Figures to the right indicate full marks.***
3) ***Use of electronic pocket calculator is allowed.***
4) ***Assume suitable data if necessary.***
5) ***Neat diagrams must be drawn wherever necessary.***

Q1) a) Discuss briefly the contribution of Jaykar Committee in the development of roads of India. **[5]**

b) Explain with an example PIEV Theory. **[5]**

OR

Q2) a) What are the various methods of classification of roads? Give Classification of road in the Nagpur Road Plan. **[5]**

b) What is the extra widening required for a pavement of width 7m on a horizontal curve of radius 200m, if the longest wheel of the vehicle expected on the road is 6.5m and the design speed is 65 Kmph. **[5]**

Q3) a) Enumerate the salient features of Rural Road Development Plan: Vision 2025. **[5]**

b) What are requirements of highway drainage? **[5]**

OR

Q4) a) Which are traffic regulation and control devices? Explain any one with neat sketches. **[5]**

b) What is road margin? Explain any two elements of road margin. **[5]**

Q5) a) Write a short note on crushing value test on aggregates. **[5]**

b) Explain the terms. **[6]**

i) Cutbacks
ii) Emulsions
iii) Crumbed Rubber Modified Bitumen

c) What are the functions of soil Subgrade? What tests are used to evaluate it's strength? **[6]**

OR

P.T.O.

Q6) a) What are the desirable properties of the sub grade soil? **[5]**

b) Write a note on Polymer Modified Bitumen (PMB). **[6]**

c) Explain significance of shape test on aggregates in the design of pavement. **[6]**

Q7) a) Explain in brief wheel load stresses and Temperature stresses in rigid pavement. **[6]**

b) What is ESWL? Explain this concept. **[5]**

c) What are the factors to be considered for the design of flexible pavements? Discuss significance of each. **[6]**

OR

Q8) a) Differentiate between a flexible and rigid pavement with a neat sketch. **[6]**

b) Explain the importance of dowel and tie bars in rigid pavements. **[5]**

c) How is the design traffic computed during the design of flexible pavements? **[6]**

Q9) a) Write a note on : **[6]**

i) Dense Bituminous Macadam (DBM).

ii) Dry Lean Concrete (DLC).

b) Describe the construction procedure of WBM pavements. **[5]**

c) Explain the concept of Super pave Mix Design Technology. **[5]**

OR

Q10)a) Describe importance of prime coat, tack coat and seal coat in process of road construction. **[6]**

b) Enlist the advantages of Recycled Asphalt Pavements (RAP). **[5]**

c) Write a note on Built Up Spray Grout (BUSG). **[5]**

Total No. of Questions : 10]

SEAT No. : ____

P9279

[Total No. of Pages : 4

[6181] - 504

B.E. (Civil)

STRUCTURAL DESIGN AND DRAWING -III

(2015 Pattern) (Semester - I) (401003)

Time : 3 Hours] ***[Max. Marks : 70***

Instructions to the candidates:

1) ***Answer Q.1 or Q.2; Q.3 or Q.4; Q.5 or Q.6; Q.7 or Q.8; and Q.9 or Q.10.***
2) ***Figures in bold to the right, indicate full marks.***
3) ***IS 456, IS 1343, IS 3370 and IS 1893 are allowed in the examination.***
4) ***The designs should comply with the latest codal provisions.***
5) ***If necessary, assume suitable data and indicate clearly.***
6) ***Use of electronic pocket calculator is allowed.***

Q1) a) Explain necessity of high strength steel in prestressed members considering the parameter of loss of prestress by giving suitable example. **[4]**

b) A post tensioned concrete beam has a rectangular cross sction of 420 × 670 mm. It is prestressed by strands of 400 mm^2 area carrying initial prestressing force of 450 kN. Calculate loss of stress due shrinkage in general using IS 1343 provisions for relative humidity 90%. Take M50 grade of concrete, Es =200 GPa. Concrete strength at transfer is 35 MPa. **[6]**

OR

Q2) a) Explain the procedure to design one way prestressed slab and draw typical detailing of the one way slab. **[4]**

b) Design the end block of a prestressed beam 400 mm wide and 600 mm deep, subjected to axial prestressing force of 1500 kN by means of two cables placed at ± 100 mm eccentricity having effective zero eccentricity at support. Assume suitably all other data. **[6]**

Q3) a) Explain the codal provisions for permissible compressive and tensile stresses of concrete in prestressed concrete structure. **[4]**

P.T.O.

b) What are flat slabs? Explain in detail how one way and two way shear check is carried out for end panel of a post tensioned prestressed flat slab. **[6]**

OR

Q4) a) Explain the process of finding moment of resistance of a prestressed section using the codal provisions. What is minimum requirement of untensioned steel in prestressed concrete? **[4]**

b) Determine the design moment for a flat slab having panel size 6.0 m × 6.0 m with the following details; Thickness of slab –150 mm, Thickness of drop panel –250 mm, Size of columns – (500 × 500) mm, Size of drop panel –2.0 m, Imposed load –2.5 kN/m^2. Distribute the design moment in end span and interior span for a typical floor using direct design method. **[6]**

Q5) a) Explain with neat sketches, the deformation of L shape retaining wall with shear key and show the position of the main reinforcement to be provided. **[3]**

b) Propose suitable dimensions and perform the stability analysis for T-shaped retaining wall provided to retain a horizontal leveled backfill of height 4.2 m having unit weight respectively equal to 17 kN/m^3. Angle of repose = 30°, Coefficient of friction between concrete and soil = 0.55, SBC of soil = 150 kN/m^2, depth of foundation 1.2 m. **[13]**

OR

Q6) Design the stem of a L-shaped retaining wall of height 5 m to retain a backfill with two different layers. The upper layer of 2.5 m height is having unit weight equal to 18 kN/m^3 with angle of repose = 30°. The lower layer has unit weight of 17 kN/m^3 and angle of repose equal to 29°. Coefficient of friction between concrete and soil = 0.55, SBC of soil = 180 kN/m^2, depth of foundation 1.0 m. Sketch the details of reinforcement in the wall with curtailment of main steel. **[16]**

Q7) a) Using coefficients from IS 3370, determine the bending moments and hoop tension at 1 m interval of height for a circular water tank of height 4 m and diameter 8 m. The tank wall is free at top and hinged at bottom and hence find the steel to resist the maximum value of hoop tension and bending moment. **[6]**

b) Design the long wall of rectangular water tank of size 8.0 m × 4.0 m × 3.0 m. Use Fe 500 grade of steel and M30 grade of concrete. Provide detailing of reinforcement. **[12]**

OR

Q8) Design a rectangular water tank open at top resting on ground having a size of 5.5 m × 3.0 m × 2.5 m high. Use M 30 and Fe 500 grade material. Sketch details of reinforcement for the wall. **[18]**

Q9) a) Determine the natural frequency for the system shown. The mass is 5 kg. the stiffness of the spring k_1=1kN/m, k_2=1.5 kN/m and k_3=2 kN/m. **[8]**

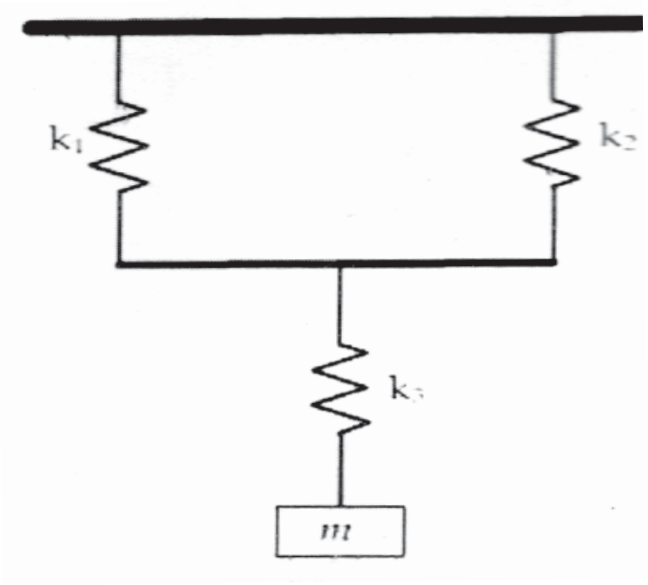

b) For a symmetrical small telephone exchange office building of size 8 m × 8 m having two equal bays has a height of 9 m with each storey having height 3.0 m. The building is located in zone II. Soil conditions is medium stiff. SMRF is adopted. DL=10 kN /m^2 and IL = 3.5 kN/m^2. Determine the design seismic forces for the building using static equivalent analysis as per IS 1893 and show the distribution of lateral forces with the building height. **[8]**

OR

Q10)a) Derive the solution for equation of motion for Single degree of Freedom system for free vibration. **[8]**

b) Draw mathematical models and corresponding free body diagrams for SDOF system with standard notations for **[8]**

i) Free undamped vibrations.

ii) Forced undamped vibrations

iii) Free damped vibrations

iv) Forced damped vibrations

❄ ❄ ❄

Total No. of Questions : 10]

SEAT No. : ____

P9280

[Total No. of Pages : 3

[6181] - 505

B.E. (Civil)

ADVANCED CONCRETE TECHNOLOGY

(2015 Pattern) (Semester - I) (401004 C) (Elective I)

Time : 2 ½ Hours] ***[Max. Marks : 70***

Instructions to the candidates:

1) ***Answer Q.1 or Q.2, Q.3 or Q.4, Q.5 or Q.6, Q.7 or Q.8, Q.9 or Q.10.***
2) ***Neat diagrams must be drawn wherever necessary.***
3) ***Figures to the right indicate full marks.***
4) ***Your answers will be valued as a whole.***
5) ***Use of electronic pocket calculator is allowed.***
6) ***Assume suitable data, if necessary.***
7) ***Use of IS code 10262, 456 is not allowed.***

Q1) a) Write short note on gel-space ratio. **[4]**

b) Explain self-curing concrete and mention the practical application of it. **[6]**

OR

Q2) a) Explain green concrete? State the various materials used in green concrete. **[4]**

b) What are the guideline for quality control and quality assurance of concrete? How to check the quality of concrete in fresh and hardened state? **[6]**

Q3) a) Write short note on Light weight concrete with practical application. **[4]**

b) Compare the high performance concrete and High strength concrete with respect to material, mechanical properties and elastic properties. **[6]**

OR

Q4) a) State advanced NDT testing methods. Explain most commonly used method. **[4]**

b) Write the design steps of self-compacting concrete. **[6]**

P.T.O.

Q5) a) Explain Fibre reinforced concrete. With suitable examples of fibres to improve. **[4]**

i) impact strength

ii) flexural strength

iii) shear strength

b) Write short note on metal fiber, polymeric fiber and carbon fiber. **[6]**

c) Explain Untracked and cracked matrix. **[6]**

OR

Q6) a) Explain the behaviour of SFRC under tension, compression and flexure. **[4]**

b) Write short note on Steel fibre and Polymeric fibres. **[6]**

c) What is GFRC? Explain the procedure to develop this material and its applications. **[6]**

Q7) a) Describe the various properties of hardened FRC. **[4]**

b) Explain the various test which are necessary for quality control of fibre reinforced concrete. **[6]**

c) Write short note on natural and artificial fibres with suitable examples and their applications. **[6]**

OR

Q8) a) Explain how the hardened polymeric fiber reinforced concrete behave under flexure? **[4]**

b) What are the necessary safety measures should be taken during mixing and casting for fiber reinforced concrete composite? **[6]**

c) Explain SIFCON material with reference to structure properties and its application. **[6]**

Q9) a) Enlist the various tests conducted on cement mortar as a ferrocement material? Explain any one in detail. **[6]**

b) What is closed mould technique for ferrocement also write merits and demerits. **[6]**

c) Explain how ferrocement differs than concrete? Write about tensile property of ferrocement. **[6]**

OR

Q10)a) Write the properties and specifications of ferrocement material. **[6]**

b) Write the short notes on merits and demerits of ferrocement. **[6]**

c) Write about tensile property of ferrocement and explain how ferrocement differs than conventional concrete? **[6]**

❄ ❄ ❄

Total No. of Questions : 8]

SEAT No. :

P9281

[Total No. of Pages : 2

[6181] - 506

B.E. (Civil)

ARCHITECTURE AND TOWN PLANNING

(2015 Pattern) (Semester - I) (401004 D) (Elective I)

Time : 2 ½ Hours] ***[Max. Marks : 70***

Instructions to the candidates:

1) ***Solve Q.l or Q.2, Q.3 or Q.4, Q.5 or Q.6, Q.7 or Q.8.***
2) ***Figures to the right indicate full marks.***
3) ***Assume suitable data if necessary.***

Q1) a) Elaborate how role of "Urban Planner and Architect" differ in relation with the "demand of the area and supply". **[6]**

b) Explain the meaning of livability and quality of life and elaborate the importance of landscaping for the same. **[7]**

c) Explain the steps to be followed in preparation of DP Proposal as per MRTP Act 1966. **[7]**

OR

Q2) a) Enlist architectural planning principles and explain the outcome after adopting architectural planning principles. (Minimum two principles' result) **[7]**

b) What is urban conservation? What are the approaches for urban conservation? **[7]**

c) Write a detailed note on New Towns on basis of the following: where developed normally and why?, authorities for development, outcome etc. **[6]**

Q3) a) Enlist : Various types of Civic Surveys required to be conducted for DP and its use. **[8]**

b) Enlist planning authorities. Elaborate the purpose of the same. Explain the organizational structure with its function for any one of them. **[9]**

OR

P.T.O.

Q4) a) How the data collected from Civic Surveys is used by planning authorities during any renewal proposals? **[8]**

b) What is traffic management? Mention its importance in todays context. Also mention the hierarchy of urban roads. **[9]**

Q5) a) What are the objectives of Real Estate (Regulation and Development) Act 2016? How it can be implied? **[8]**

b) Write a note on importance of Land Acquisition Rehabilitation and Re-settlement Act. **[9]**

OR

Q6) a) Enlist and elaborate salient features of MAHA-RERA. **[8]**

b) Write a note on URDPFI Guidelines and its uses. **[9]**

Q7) a) Write a note on ; " AMRUT Guidelines" and " CRZ". **[8]**

b) How Remote Sensing is useful in town planning? Elaborate with an example. **[8]**

OR

Q8) a) Write a note on ;" Special townships" and " SEZ". **[8]**

b) How GIS is useful in town planning? Elaborate with an example. **[8]**

❄ ❄ ❄

Total No. of Questions : 10]

SEAT No. :

P9282

[Total No. of Pages : 2

[6181]-507
B.E. (Civil)
TQM & MIS IN CIVIL ENGINEERING
(2015 Pattern) (Semester - I) (Elective - II) (401005C)

Time : 2½ Hours] *[Max. Marks : 70*

Instructions to the candidates:

1) ***Answer Q.1 or Q.2, Q.3 or Q.4, Q.5 or Q.6 Q.7 or Q.8, Q.9 or Q.10.***
2) ***Neat diagrams must be drawn wherevern necessary.***
3) ***Figures to the right side indicate full marks.***

Q1) a) Comment on: Quality is conformance to requirement. **[6]**

b) Define the term Six Sigma. State the various levels of Six Sigma. **[4]**

OR

Q2) a) Explain in detail Histogram quality control tool. **[6]**

b) Discuss any two construction defects. **[4]**

Q3) a) Discuss the objectives of ISO Principles. **[6]**

b) Write short note on Non Conformity Reports. **[4]**

OR

Q4) a) Develop a checklist for formwork activity. **[6]**

b) Discuss the advantages of TQM. **[4]**

Q5) a) Define the term benchmarking. Explain internal benchmarking in detail. **[8]**

b) Explain the following. **[10]**

i) Prevention cost

ii) Appraisal cost

OR

Q6) a) Write short note on **[8]**

i) Management Kaizen

ii) Group Kaizen.

b) Explain the steps followed in benchmarking process. **[10]**

P.T.O.

Q7) a) Explain in detail Seiri & Shitsuke. **[8]**

b) Write short note on: **[8]**

i) Malcom Baldrige National Quality Award

ii) Deming Prize award

OR

Q8) a) What is FMEA. Explain in detail FMEA procedure? **[8]**

b) Explain in detail Kaizen process. **[8]**

Q9) a) Explain in detail following. **[8]**

i) Operation Support System

ii) Transaction Process System

b) Define the term MIS. How it is beneficial in construction organization. **[8]**

OR

Q10)a) Define the term Decision Support System. Explain in brief the DSS. **[8]**

b) Explain in detail various characteristic of information in details. **[8]**

Total No. of Questions : 12]

SEAT No. : ____

P-9361

[Total No. of Pages : 2

[6181]-508

B.E. (Civil Engineering)

DAMS AND HYDRAULICS STRUCTURES

(2015 Pattern) (Semester - II) (401007)

Time : 2½ Hours] ***[Max. Marks : 70***

Instructions to the candidates:

1) ***Solve Q.1 or Q.2, Q.3 or Q.4, Q.5 or Q.6, Q.7 or Q.8, Q.9 or Q. 10, Q.11 or Q.12.***
2) ***Neat sketches diagrams must be drawn wherever necessary***
3) ***Figures to the right indicate full marks for the sub-questions.***
4) ***Assume suitable data if necessary and state them in your answer clearly.***
5) ***Use non-programmable pocket size electronic calculator is allowed.***

Q1) Write any six external forces acting on gravity dam along with their equations. **[6]**

OR

Q2) State various objectives of dam safety and instrumentation. Also state instrument used to measure seepage. **[4 + 2]**

Q3) What is elementary profile of gravity dam? Explain with the help of diagram, how it is modified to practical profile. **[2 + 2 + 4]**

OR

Q4) What is buttress dam? State advantages and limitations of buttress dam. **[2 + 3 + 3]**

Q5) Draw a labeled sketch of ogee spillway showing all components & explain details. **[2 + 4]**

OR

Q6) What is a spillway gate? Briefly explain any two types of gates. **[6]**

P.T.O.

Q7) a) Write the procedure of stability analysis of an earth dam by Swedish Slip. **[9]**

b) What are different seepage control measures taken for the earthen dam for the seepage through embankment and through foundation? **[9]**

OR

Q8) a) Define phreatic line. How would you proceed to determine the phreatic line through homogenous earthen dams provided? **[9]**

i) with a horizontal fllter ii) without a horizontal filter

b) Draw a neat layout of diversion head works and indicate the various components along with explain their functions in briet. **[9]**

Q9) a) Differentiate between design of canal by kennedy's theory and Lacey's regime theory. **[8]**

b) What are the guidelines for design of a canal alignment to optimize cost? **[8]**

OR

Q10) a) What is canal Fall? State-different types of canal falls with neat sketches. Explain any one. **[8]**

b) Write short note on : **[8]**

i) Canal falls ii) Canal outlets

iii) Canal escapes iv) Canal regulators

Q11) a) What do you understand by river training work? What are the functions of marginal bunds? **[8]**

b) What is a canal? Explain three types of canals based on function. **[8]**

OR

Q12) a) Explain necessity of cross drainage work **[8]**

Explain Syphon Aqueduct in detail with neat sketch.

b) Write Short note on : **[8]**

i) Canal falls ii) Canal outlets

iii) Canal escapes iv) Canal regulators

Total No. of Questions : 12]

SEAT No. :

P9283

[Total No. of Pages : 5

[6181]-509
B.E. (Civil)
QUANTITY SURVEYING, CONTRACTS AND TENDERS
(2015 Pattern) (Semester - II) (401008)

Time : 2½ Hours] *[Max. Marks : 70*

Instructions to the candidates:

1) ***Answer Q.1 or Q.2, Q.3 or Q.4,Q.5 or Q.6, Q.7 or Q.8, Q.9 or Q.10, Q.11 or .Q.12.***
2) ***Neat diagrams must be drawn wherever necessary.***
3) ***Figures to the right side indicate full marks.***
4) ***Use of electronic pocket calculator is allowed.***
5) ***Assume Suitable data if necessary.***

Q1) a) State different types of estimate and hence differentiates between revised estimate and supplementary estimate. **[3]**

b) State the unit of measurement for BBM, RCC and plastering. **[3]**

OR

Q2) A primary health centre of 50 beds consisting O.P.D; Operation Theater, medical store, store, administrative section, Laboratory and other units was recently constructed. The cost of this project was found to be Rs. 80 lakhs.**[6]**

a) Determine the rate of construction per service unit.

b) Considering 10% rise over the rate per service unit for above mentioned project, determine the estimated cost for proposed hospital campus of 65 beds with similar units.

Q3) A small residential load bearing building is shown in Fig. 1 Work out the following quantity by using center line method.

Earthwork in excavation. **[2]**

PCC in foundation. **[2]**

UCR in foundation. **[2]**

Brick Masonry (1:6) in superstructure **[2]**

OR

Q4) Work out the quantity of concrete and steel in footing for RCC column given in (see Fig.-2) using following data. **[8]**

P.T.O.

Q5) a) Work out the quantity of materials required for the first class brick work of 10 meter cube for the super Structure in cement mortor 1:6. **[3]**

b) What is Task Work? Why does it vary? Explain it's important with an example. **[3]**

OR

Q6) a) What is the necessity of drafting specification for Civil engineering work? Explain briefly **[4]**

i) General specification.

ii) Detailed specification.

b) Explain the Task work or out turn. **[2]**

Q7) a) State four methods of depreciation. Explain any one detail. **[6]**

b) Write a note on: Sinking Fund. **[4]**

c) Explain **[8]**

i) Salvage value

ii) Book value

iii) Fair market value

OR

Q8) a) What are the different types of value? Explain market value and any 5 factor affecting market value of property. **[6]**

b) Define Price and Cost **[4]**

c) The depreciated replacement value of building has to be found out with the following data **[8]**

i) Total builtup area = 500m2

ii) Age of building =25 years

iii) Life of building = 90 years

iv) Scrap value after useful life = 10%

v) Per centage for sinking fund = 5%

Assume rate of construction as Rs. 2000/sq-m

Q9) a) Draft a brief tender notice to execute the construction of public building worth 50 lakh to be completed in 24 calendar month involving prequalification of tenders. **[6]**

b) Explain "3 Bid System" of submitting tenders. **[4]**

c) State merits and demerits of pre-qualification of contractors. **[6]**

OR

Q10)a) Explain tender and its example? **[6]**

b) Define: Pre-bid Conference. **[4]**

c) Write detailed procedure of tendering? State security deposit? **[6]**

Q11)a) Explain registration procedure for contractor? **[6]**

b) Explain the purpose of taking security deposit in tender. **[4]**

c) Explain the term termination of contract? **[6]**

OR

Q12)a) Define arbitration and state qualification of good arbitrator. **[6]**

b) Explain Need of arbitrator? **[4]**

c) What is arbitration and what are powers of arbitrator? **[6]**

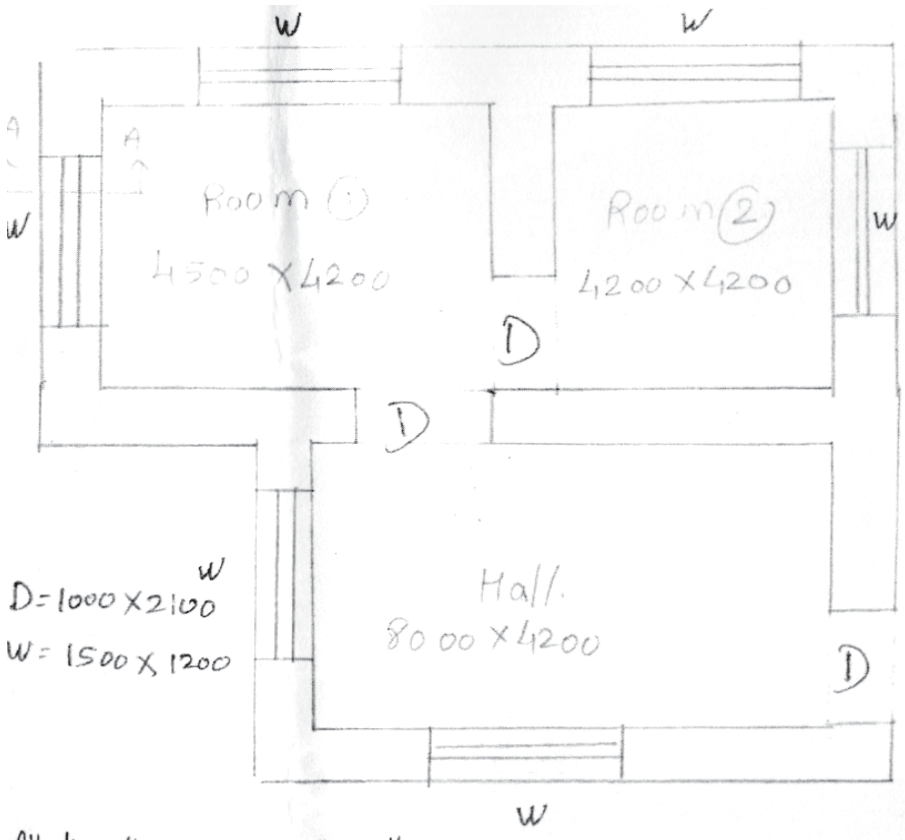

All dimention are in - "mm"

Plan

Fig- 1



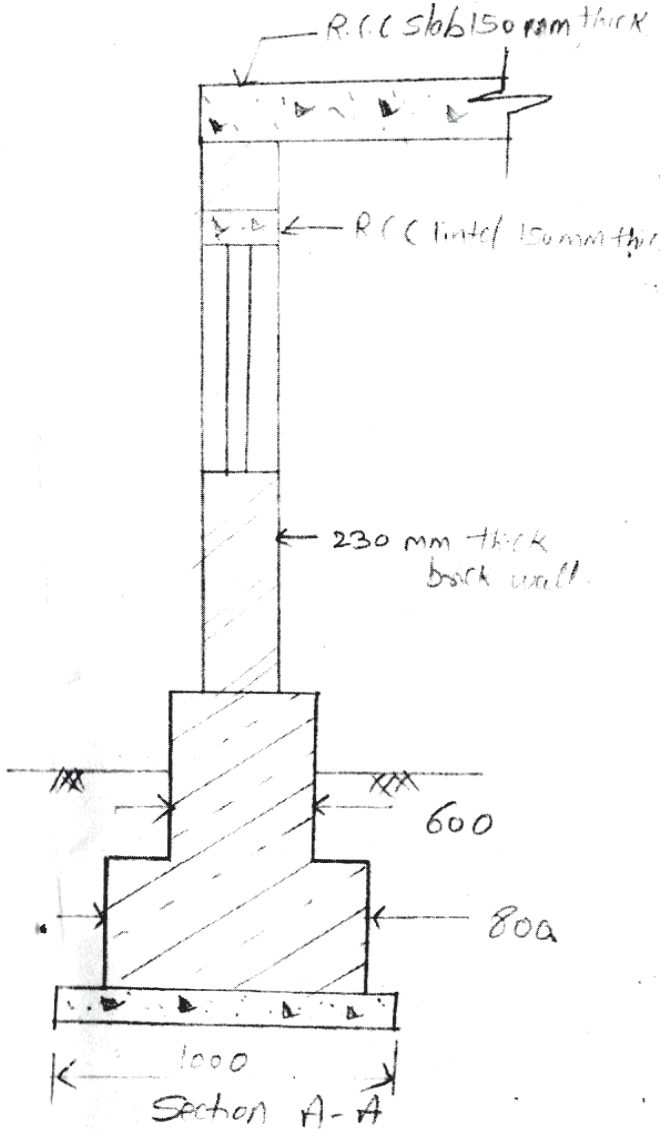

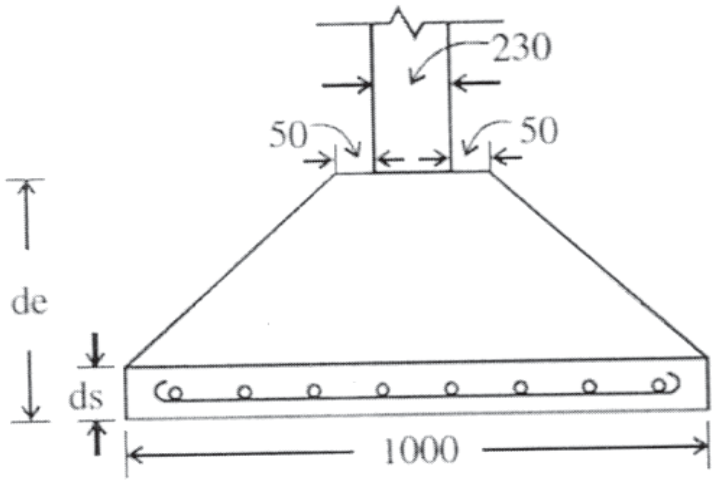

All dimensions are in mm.

Fig. – 2

Column	No.	Column Size	Footing size	de/ds	Footing reinforcement
C_2	07	230×300	1000×1200	350/150	10ϕ@150c/c both way

Assume suitable cover to the reinforcement.

Total No. of Questions : 12]

SEAT No. :

P9284

[Total No. of Pages : 2

[6181]-510
B.E. (Civil)
HYDRO POWER ENGINEERING
(2015 Pattern) (Semester - II) (Elective - III) (401009 C)

Time : 2½ Hours] *[Max. Marks : 70*

Instructions to the candidates:

1) ***Solve Q.1 or Q.2, Q.3 or Q.4, Q.5 or Q.6 Q.7 or Q.8, Q.9 or Q.10, Q.11 or Q.12.***
2) ***Figures to the right indicate full marks.***
3) ***Assume any suitable data necessary.***

Q1) a) Compare hydro power with tidal power plants. **[4]**

b) Explain procedure to determine hydro power potential in rivers. **[3]**

OR

Q2) a) Write a hydro power potential available in India? **[4]**

b) Discuss the effect of climate change on hydro power. **[3]**

Q3) a) Discuss classification of hydro power plant. **[4]**

b) Explain with a neat sketch pumped storage power plant. **[3]**

OR

Q4) a) Compare run off hydro power plant with storage hydro power plant. **[4]**

b) Write function of **[3]**

i) Penstock,

ii) HRT

iii) Draft tube

Q5) The load on the hudel power plant varies from minimum of 10000 kw to maximum 40000 kw. Two turbo generator of capacity 21000 kw each have been installed. Determine load factor, capacity factor and plant use factor. **[6]**

OR

Q6) a) Write a note on load prediction. **[3]**

b) Discuss electricity tariff for domestic use for your home. **[3]**

P.T.O.

Q7) a) Explain different types of penstock as component of hydro power plant. **[6]**

b) What are different types of power plants? Discuss its suitability. **[6]**

c) Draw a labelled sketch of storage type hydro power plant. **[5]**

OR

Q8) a) Write functions of any six power plant equipments. **[6]**

b) Explain penstock - funtion, classification, econcomic diameter of penstock. **[6]**

c) Explain the different components of underground power plant. **[5]**

Q9) a) A pelton wheel turbine is to be generated for the following specifications. Shaft power = 11772kw; head = 380m; speed = 750 rpm; overallefficiency = 86%; jet diameter is not exceeded to $1/6^{th}$ of wheel diameter.

Determine wheel diameter, number of jets and dia meter of jet take Cv = 0.985, Ku = 0.4. **[6]**

b) Explain the classification of turbines? **[6]**

c) Write a note on governing of turbines. **[5]**

OR

Q10)a) Write function, types of draft tubes. **[6]**

b) Compare reaction and impulse turbine. **[6]**

c) Explain different types of surge tank and their suitability. **[5]**

Q11)a) Discuss rules, regulation and policies in electric energy sector. **[8]**

b) Explain the role of private participants in power setor in India. **[8]**

OR

Q12)a) Write a note on carbon credits. **[8]**

b) Explain tariffing for electrical energy and types for hydro power plant. **[8]**

Total No. of Questions : 10]

SEAT No. :

P9285

[Total No. of Pages : 2

[6181]-511
B.E. (Civil)
AIR POLLUTION AND CONTROL
(2015 Pattern) (Semester - II) (401009 D) (Elective - III)

Time : 2½ Hours] ***[Max. Marks : 70***

Instructions to the candidates:

1) ***Answer Q.1 or Q.2, Q.3 or Q.4, Q.5 or Q.6, Q.7 or Q.8, Q.9 or Q.10.***
2) ***Figures to the right indicate full marks.***
3) ***Draw neat figures wherever necessary.***

Q1) a) Explain the Ambient air quality monitoring as per the procedure laid down by CPCB. **[6]**

b) Explain with sketch various layers of atmosphere. **[4]**

OR

Q2) a) Explain the primary and secondary Meteorological parameters. **[6]**

b) Explain the purpose of ambient air sampling. **[4]**

Q3) a) Write short note on Gaussian diffusion model for finding ground level concentration. **[6]**

b) State various air pollutants and their sources. State the ill effect of air pollution. **[4]**

OR

Q4) a) Define air pollution and enlist various sources of air pollution. **[6]**

b) Explain with a neat sketch location of sampling ports and traverse points. **[4]**

Q5) a) Write short note on **[10]**

i) ESP

ii) Bag Filter House

b) What are remedial measures to control air pollution? **[6]**

OR

P.T.O.

Q6) a) Explain in brief Control of air pollution by **[10]**

i) Process modification

ii) Change of raw materials

b) Explain in brief methods to control air pollution from automobiles. **[6]**

Q7) a) i) State and explain the Environment (Protection) Act 1986 **[5]**

ii) Explain Air Pollution Act. 1981 **[5]**

b) Explain in details Emission standards for stationary and mobile sources. **[6]**

OR

Q8) a) Explain in brief Cost-benefit analysis method for assessing air pollution control programs in urban environments. **[10]**

b) State the Emission standards for stationary sources. **[6]**

Q9) a) Explain in details the Role of regulatory agencies and control boards in obtaining environmental clearance for project. **[9]**

b) Explain Environmental impacts of sugar industry. **[9]**

OR

Q10)a) Explain in details the Methodology for preparing environmental impact assessment. **[8]**

b) Write short note on **[10]**

i) Environmental impacts of cement industry

ii) Environmental impacts of thermal power plants



Total No. of Questions : 10]

SEAT No. : [ ]

P9286

[Total No. of Pages : 2

[6181]-512
B.E. (Civil)
CONSTRUCTION MANAGEMENT
(2015 Pattern) (Elective - IV) (Semester - II) (401010 A)

Time : 2½ Hours] ***[Max. Marks : 70***

Instructions to the candidates:

1) ***Answer any one from questions 1 or 2, 3 or 4, 5 or 6 7 or 8, 9 or 10.***
2) ***Neat diagrams must be drawn wherever necessary.***
3) ***Figures to the right indicate full marks.***
4) ***Assume suitable data, if necessary.***

Q1) a) Write brief overview of Indian construction industry with reference to advanced technologies used for construction. **[5]**

b) What is WBS? Prepare WBS for Construction of Industrial shed. **[5]**

OR

Q2) a) What are the factors affecting scheduling. **[5]**

b) Explain importance and difficulties in capital investments. **[5]**

Q3) a) Explain in brief "Balance Sheet". **[5]**

b) Explain Workman's compensation act 1923. **[5]**

OR

Q4) a) Explain the objectives of Work measurement and Work Study. **[5]**

b) Explain the activity chart and String Diagram. **[5]**

Q5) a) Explain various types risk involved in Metro Project. **[8]**

b) Explain the energy cost escalation and its impacts. **[8]**

OR

Q6) a) Explain role of insurance in risk management **[8]**

b) Explain in brief sensitivity analysis. **[8]**

P.T.O.

Q7) a) Write short note on: Buyers supply relationship, How Buyers supply relationship is important in material management. **[10]**

b) Write short note on: EOQ Model and Supply Chain management. **[8]**

OR

Q8) a) Explain Human resource informantion system. **[8]**

b) Explain Performance appraisal & state the importance. **[10]**

Q9) a) Explain ANN & applications in civil engineering. **[8]**

b) What do you mean by Fuzzy Logic? State its applications in civil engineering. **[8]**

OR

Q10)a) Explain with example "Artificial Neural Network". **[8]**

b) Explain Genetic Algorithm with suitable example. **[8]**



Total No. of Questions : 8]

SEAT No. :

P9287

[Total No. of Pages : 2

[6181]-513
B.E. (Computer Engineering)
HIGH PERFORMANCE COMPUTING
(2015 Pattern) (Semester - I) (410241)

Time : 2½ Hours] *[Max. Marks : 70*

Instructions to the candidates:

1) ***Answer Q1 or Q2, Q3 or Q4, Q5 or Q6, Q7 or Q8.***
2) ***Figures to the right side indicate full marks.***
3) ***Neat diagrams must be drawn wherever necessary.***
4) ***Assume suitable data if necessary.***
5) ***Justify your answer with an example wherever necessary.***

Q1) a) Explain Flynn's Classical Taxonomy which classifies parallel computers. **[7]**

b) Explain different decomposition techniques of parallel programs. **[7]**

c) Explain scatter operation on eight-node hypercube in detail and give cost of scatter and gather operation. **[6]**

OR

Q2) a) Describe cache coherency issues. **[7]**

b) Explain Parallel Algorithm Models. **[7]**

c) Explain One-to-All broadcast operation on an eight-node ring. **[6]**

Q3) a) Explain sources of overhead in Parallel programs in detail. **[8]**

b) What is the effect of granularity on performance? Justify the answer with adding 16 different numbers on 4 processors. **[8]**

OR

P.T.O.

Q4) a) Write a short note on effects of following points on the performance of parallel system : **[8]**

i) Execution time

ii) Total parallel overhead

iii) Speedup

b) Explain dense matrix algorithms for matrix-vector multiplication with row-wise 1-D partitioning formulation. **[8]**

Q5) a) What are the issues in performing sorting operations on parallel computing? Describe in detail. **[9]**

b) Explain parallelizing quicksort algorithm on CRCW PRAM formulation model with example of eight numbers. **[9]**

OR

Q6) a) Explain parallel depth search operation in detail. **[9]**

b) Find the minimum spanning tree using Prim's Algorithm for an undirected weighted graph whose edges and weights as follows : (ab) = 4, (ae) = 2, (bc) = 8, (ed) = 5, (cd) = 2, (ad) =2, (ac) = 1, (be) = 3, (bd) = 4, (ce) = 3. **[9]**

Q7) a) How synchronization is managed in CUDA? Justify with example. **[8]**

b) Explain different kinds of CUDA memory. **[8]**

OR

Q8) a) Draw & explain CUDA architecture and CUDA compilation in detail. **[8]**

b) How and when to use blockIdx.x, threadIdx.x, blockDim.x in a CUDA program. Justify the answer with the example of addition of two vectors a and b answer in c. **[8]**

Total No. of Questions : 10]

SEAT No. :

P9288

[Total No. of Pages : 2

[6181]-514

B.E. (Computer Engineering)

ARTIFICIAL INTELLIGENCE AND ROBOTICS

(2015 Pattern) (Semester - I) (410242)

Time : 2½ Hours] *[Max. Marks : 70*

Instructions to the candidates:

1) ***Answer Q.1 or Q.2, Q.3 or Q.4, Q.5 or Q.6, Q.7 or Q.8 Q.9 or Q.10.***
2) ***Neat digrams must be drawn wherever necessary.***
3) ***Figures to the right indicate full marks.***
4) ***Assume suitable data, if necessary.***
5) ***Justify your answer with an example wherever necessary.***

Q1) a) What is state space search? Explain depth bounded DFS in detail. **[8]**

b) Discuss on pruning the closed and open lists. **[6]**

OR

Q2) a) Give the algorithm for Tabu search and explain with an example. **[8]**

b) Explain constraint satisfaction with N-Queens problem. **[6]**

Q3) a) What is goal stack planning? Discuss with an example. **[8]**

b) Explain Knowledge Based Reasoning in detail. **[6]**

OR

Q4) a) Discuss on Knowledge representation. Differentiate frames and semantic nets. **[8]**

b) Explain Backward Chaining in detail. **[6]**

Q5) a) Explain different Stages in Natural Language Processing with examples. **[8]**

b) Explain applications of NLP in Machine Translation and Big Data Information Retrieval. **[6]**

OR

Q6) a) Explain Supervised learning with suitable example. **[8]**

b) Explain Feed forward and Feedback ANNs. **[6]**

P.T.O.

Q7) a) Explain Sensing and mapping for Point Robot. **[8]**

b) With diagram discuss on Human Robot Interface. **[6]**

OR

Q8) a) Draw and explain horizontal and vertical decomposition. **[8]**

b) Write a short notes on: **[6]**

i) Sonar

ii) Radar

Q9) a) Explain how robots are used in: **[8]**

i) Agriculture

ii) Forestry

b) Explain Robot Pose Maintenance and Localization. **[6]**

OR

Q10)a) What is mapping in robots? Give short notes on: **[8]**

i) Topological Maps

ii) Geometric Maps

b) Explain recursive filtering in detail. **[6]**

Total No. of Questions : 10] **SEAT No. :**

P9289 **[Total No. of Pages : 2**

[6181]-515
B.E. (Computer Engineering)
DATA ANALYTICS
(2015 Pattern) (Semester - I)(410243)

Time : 2½ Hours] ***[Max. Marks : 70***

Instructions to the candidates:

1) ***Attempt Q.1 or Q.2, Q.3 or Q.4, Q.5 or Q.6, Q.7 or Q.8, Q.9 or Q10.***
2) ***Neat diagrams must be drawn wherever necessary.***
3) ***Assume suitable data if necessary.***

Q1) a) Demonstrate the overview of Data Analytics Life Cycle. Explain any 2 phases. **[5]**

b) Give the approaches to improve Apriori's efficiency. **[5]**

OR

Q2) a) Explain the major characteristics of Big Data. **[5]**

b) Derive and explain any two statistical methods for evaluation. **[5]**

Q3) a) What is Regression? List the types of regression. Explain any one type. **[5]**

b) When do we use Wilcoxon rank - sum test? Write steps in test. **[5]**

OR

Q4) a) Compare Type I and Type II errors. **[5]**

b) Explain apriori association rule mining algorithm with example. **[5]**

Q5) a) Explain following decision tree algorithms. **[6]**

i) ID3

ii) CART

b) What is Gini Index? Explain in brief the CART algorithm? **[6]**

c) Write the mathematical equation for the Bayes theorem and explain it with a suitable example? **[5]**

OR

P.T.O.

Q6) a) What is data smoothing? Explain the steps involved in the data smoothing process? **[7]**

b) Write short note on Diagnostics of Classifiers. **[5]**

c) What are the advantages of Decision Trees? **[5]**

Q7) a) What is data visualization? Explain any two data visualization techniques. **[8]**

b) Explain in brief, different conventional data visualization tools? **[8]**

OR

Q8) a) What kinds of problems occur in big data visualization? Discuss some of the solutions. **[8]**

b) Explain any 2. Explain in brief conventional data visualization tools. **[8]**

Q9) a) Explain Tableau-Data Visualization Tool. **[8]**

b) Explain the Storage Mechanism in HBase. **[5]**

c) Differentiate between SQL & NoSQL. **[4]**

OR

Q10)a) Write short note on: **[9]**

i) Map Reduce

ii) HIVE

iii) HBase

b) Explain various use cases of map reduce for unstructured data. **[8]**

Total No. of Questions : 8]

SEAT No. :

P9290

[Total No. of Pages : 2

[6181]-516

B.E. (Computer Engineering)

SOFTWARE ARCHITECTURE AND DESIGN

(2015 Pattern) (Semester - I) (Elective - I) (410244 B)

Time : 2½ Hours] *[Max. Marks : 70*

Instructions to the candidates:

1) ***Attempt Q.1 or Q.2, Q.3 or Q.4, Q.5 or Q.6, Q.7 or Q.8.***
2) ***Figures to the right indicate full marks.***
3) ***Neat diagrams must be drawn wherever necessary.***
4) ***Assume suitable data if necessary.***

Q1) a) Define the quality. What do you understand by quality attributes. Explain with example. **[8]**

b) What do you understand by tactics? Explain Security tactics in detail. **[6]**

c) Explain Modifiability Quality Attribute Scenario. **[6]**

OR

Q2) a) What is the significance of software Architecture in designing a software? What is the architecture business cycle. **[8]**

b) Describe relationship of tactics to Architectural Patterns **[6]**

c) What do you understand by catalog of design pattern? **[6]**

Q3) a) What are structural patterns? Why do need proxy design pattern. **[8]**

b) What is observer design pattern? Explain with one example. **[8]**

OR

Q4) a) Identify a case study and apply proxy design pattern on it? **[8]**

b) Why do we need Iterator design pattern? When & where should the iterator design pattern be used? **[8]**

Q5) a) Create one XML document. Compare and contrast XML with Json. **[9]**

b) Elaborate on need of Client side technology in multi-tier architectures with example. **[8]**

OR

P.T.O.

Q6) a) Write XML, DTD and XML Schema structure for a Library management XML. **[9]**

b) Show the life cycle of AJAX with neat diagram. **[8]**

Q7) a) What do you understand by Middleware Technologies? Give the importance of server side Technology : MVC **[9]**

b) Show the architecture of Java EE. **[8]**

i) RPC

ii) RMJ Socket

OR

Q8) a) Explain EJB 3.0 Architecture. Explain message Beans with example. **[9]**

b) Server side technologies are used in multi-tier architectures. Elaborate. Give the use of server Side Technology: SOA. **[8]**

◀▶ ◀▶ ◀▶

Total No. of Questions : 8]

SEAT No. :

P9291

[Total No. of Pages : 2

[6181]-517

B.E. (Computer Engineering)

DATA MINING AND WAREHOUSING

(2015 Pattern) (Semester - I) (Elective - I) (410244 D) (Theory)

Time : 2½ Hours] *[Max. Marks : 70*

Instructions to the candidates:

1) ***Attempt Q.1 or Q.2, Q.3 or Q.4, Q.5 or Q.6, Q.7 or Q.8.***
2) ***Figures to the right indicate full marks.***
3) ***Neat diagrams must be drawn wherever necessary.***
4) ***Assume suitable data if necessary.***

Q1) a) Explain the process of knowledge Discovery of Data in detail. **[6]**

b) Briefly compare snowflake schema, fact constellation, and star net query model you may use an appropriate example to explain the concept. **[6]**

c) Explain following **[8]**

i) Minskowski Distance

ii) Euclidean distance

iii) Manhattan distance

OR

Q2) a) Explain types of attributes with examples. **[6]**

b) Explain OLAP operations in Multidimensional data model. **[6]**

c) How to measure dissimilarity in the following attributes. Write an appropriate example for each. **[8]**

i) Nominal attributes

ii) Binary attributes

Q3) a) Briefly with an example explain the following:

i) Frequent itemset

ii) Closed frequent Itemset **[8]**

b) Explain mining Multilevel association rules. What is Uniform support? **[8]**

OR

P.T.O.

Q4) a) Explain Steps of Apriori Algorithm and Steps of FP Growth Algorithm. **[8]**

b) Consider an example of the following set of transactions in Market Analysis. Assuming minimum support of 50% and minimum confidence of 80%. **[8]**

Find:

i) All frequent itemset using a-priori algorithm.

ii) All association rules using a-priori algorthm.

Transaction ID	Items Bought
T1	M,A,B,D
T2	A,D,C,B,F
T3	A,C,B,F
T4	A,B,D

Q5) a) Discuss the Sequential Covering algorithm in detail. **[9]**

b) What is Bayesian Belief Network. Elaborate the training process of a Bayesian Belief Network with suitable example. **[8]**

OR

Q6) a) Define Classification and Prediction. Explain decision tree based Classification method with suitable example. **[9]**

b) Explain the training and testing phase using Decision Tree in detail. Support your answer with relevant example. **[8]**

Q7) a) Explain following **[9]**

i) Systematic learning

ii) Wholistic learning

iii) Multiperspective learning.

b) Explain in detail following techniques to evaluate the accuracy of a Classifier

i) Holdout method **[8]**

ii) Cross validation

OR

Q8) a) How is the performance of Classifiers algorithms evaluated? Discuss in detail. **[9]**

b) Explain following with example **[8]**

i) Accuracy

ii) Error Rate

iii) Precision

iv) Recall

Total No. of Questions : 12] **SEAT No. :**

P9292 **[Total No. of Pages : 2**

[6181]-518
B.E. (Computer Engineering)
SOFTWARE TESTING AND QUALITY ASSURANCE
(2015 Pattern) (Elective - II) (Semester - I) (410245 B)

Time : 2½ Hours] ***[Max. Marks : 70***

Instructions to the candidates:

1) ***Solve Q.1 or Q.2, Q.3 or Q.4, Q.5 or Q.6 Q.7 or Q.8, Q.9 or Q.10, Q.11 or Q.12.***
2) ***Figures to the right indicate full marks and Bifurcation for sub questions.***
3) ***Draw suitable diagrams and tables if necessary.***
4) ***Assume suitable Data if necessary, mention your assumpations.***

Q1) a) Explain 'Quality' in terms of the generic expectations from any product.

b) Write short note on Waterfall Model and Spiral model.

[3+3=6]

OR

Q2) a) Discuss advantages and disadvantages of using Software tools for Analysis and Decision Making.

b) Explain processes related to software Quality.

[3+3=6]

Q3) a) Explain Big bang approach of testing.

b) Explain Pillars of Quality management System.

[3+4=7]

OR

Q4) a) Discuss advantages and disadvantages of Requirement traceability matrix.

b) What is defect management? Discuss generic steps in defect management.

[3+4=7]

Q5) a) Explain features of good testing.

b) List and explain requirements for test tool.

[3+4=7]

OR

Q6) a) What are the criteria for selecting a test tools? Write steps for tool selection and deployment.

b) What are some of the challenges in automating the testing of GUI portions of an application?

[3+4=7]

P.T.O.

Q7) a) Describe the most common types of automated tests.

b) Give features of Selenium IDE.

c) Discuss advantages and disadvantages of Selenium IDE.

[6+5+5=16]

OR

Q8) a) Discuss Selenium Webdriver.

b) Discuss few elements of Selenium IDE to make it simple.

c) What makes Selenium Grid more powerful over Selenium RC?

[6+5+5=16]

Q9) a) Explain elements of Software Quality Assurance.

b) Write short note on Six Sigma for software engineering.

c) What are tasks, goals and metrics of Software Quality Assurance?

[6+6+5=17]

OR

Q10)a) Discuss Principles of Quality Management.

b) Explain Software Quality Assurance and elements of SQA.

c) Write short note on ISO 9000 quality standards.

[6+6+5=17]

Q11)a) Explain Software quality metrics.

b) Write short note on

i) Checklists,

ii) Histogram

c) Explain Run Charts, Scatter diagrams.

[6+6+5=17]

OR

Q12)a) Enlist Ishikawa's seven basic tools for software quality and explain any two.

b) Explain Pareto Chart and Control Chart.

c) Write short note on

i) Fix quality

ii) Fix response time and fix responsiveness

[6+6+5=17]

♦ ♦ ♦

Total No. of Questions : 8]

SEAT No. :

P9293

[Total No. of Pages : 2

[6181]-519

B.E. (Computer Engineering)

MACHINE LEARNING

(2015 Pattern) (Semester - II) (410250)

Time : 2½ Hours] *[Max. Marks : 70*

Instructions to the candidates:

1) ***Answer Q1 or Q2, Q3 or Q4, Q5 or Q6, Q7 or Q8.***
2) ***Figures to the right side indicate full marks.***
3) ***Neat diagram must be drawn wherever necessary.***
4) ***Assume suitable data if necessary.***

Q1) a) What is the difference between classic and adaptive machines? With the reference to machine learning explain the concept of Adaptive Machine. **[8]**

b) Using suitable example describe in details the Principle Component Analysis. **[6]**

c) Differentiate between Logistic Regression and Linear Regression. **[6]**

OR

Q2) a) Describe the following Important Elements of Machine Learning. **[8]**

i) Data formats

ii) Learnability

iii) Statistical learning approaches

iv) Elements of information theory

b) Describe the following feature selection terms. **[6]**

i) Data scaling

ii) Normalization

c) What is the ROC curve principal? State the characteristics of ROC. **[6]**

P.T.O.

Q3) a) Describe support vector machine and its implementation in scikit-learn. **[8]**

b) Define Bayes Theorem. Elaborate Naive Bayes Classifier working with example. **[8]**

OR

Q4) a) Write shorts notes on : **[8]**

i) Bernoulli naive Bayes

ii) Gaussian naive Bayes

b) Describe the following terms in details. **[8]**

i) Controlled Support Vector Machines

ii) Support Vector Regression

Q5) a) With reference to Meta Classifiers, Explain the concepts of Weak and eager learner. **[9]**

b) What is the difference between DBSCAN and K-Means algorithm? **[8]**

OR

Q6) a) With the reference to clustering, explain the issue of "optimization of clusters". Explain evaluation method for clustering algorithms. **[9]**

b) Write short notes on : **[8]**

i) Gradient Tree Boosting

ii) Voting Classifier

Q7) a) Describe the issue of connectivity constraints with reference to Hierarchical Clustering. **[9]**

b) Elaborate the common architectural principles of deep networks. **[8]**

OR

Q8) a) Write short notes on : **[9]**

i) Content based systems

ii) Naive user based systems

iii) Building blocks of deep networks

b) What is agglomerative clustering? Explain with example. **[8]**



Total No. of Questions : 8]

SEAT No. :

P9294

[Total No. of Pages : 2

[6181]-520
B.E. (Computer Engineering)
INFORMATION AND CYBER SECURITY
(2015 Pattern) (Semester - II) (410251)

Time : 2½ Hours] *[Max. Marks : 70*

Instructions to the candidates:

1) ***Solve Q.1 or Q.2, Q.3 or Q.4, Q.5 or Q.6 Q.7 or Q.8.***
2) ***Figures to the right indicate full marks.***
3) ***Neat diagrams must be drawn wherever necessary.***
4) ***Assume suitable data, if necessary.***

Q1) a) Define basic terminology in network Security? Differentiate between confidentiality and authentication. **[8]**

b) Demonstrate Diffie-Hellman Key exchange algorithm? **[6]**

c) Identify use of X. 509 Certificate with diagram. **[6]**

OR

Q2) a) Illustrate the terms **[8]**

i) Public Key/ Private Key

ii) Privacy Vs Security

iii) Plaintext

iv) Ciphertext

b) Demonstrate Data Encryption Standard Algorithm? **[6]**

c) Define RSA, Illustrate your answer with Example. **[6]**

Q3) a) Define modes of operation of IPSEC with diagram. **[8]**

b) Demonstrate SSL protocol architecture in detail. **[8]**

OR

Q4) a) Illustrate following Terms with suitable diagram. **[8]**

i) Change cipher spec protocol

ii) Handshake Protocol

iii) Alert Protocol

b) Illustrate IP sec Transport and Tunnel Mode? Explain VPN. **[8]**

P.T.O.

Q5) a) What is Intrusion detection System? Explain types based on method of detection. **[9]**

b) Define and Explain Firewall, its architecture, limitation and applications. **[8]**

OR

Q6) a) Explain types of IDS, its limitation and challenges. **[9]**

b) Illustrate password management in detail. **[8]**

Q7) a) Define following terms in detail. **[9]**

i) Nmap

ii) Snork

iii) Wireshark

b) What is SQL injection attack? How to protect data from SQL Injection? **[8]**

OR

Q8) a) Write short note on Indian IT Act 2000 and amendments in 2008? **[9]**

b) Outline the Phishing concepts? What are the techniques used by phishers to launch it? **[8]**

♦ ♦ ♦

Total No. of Questions : 8] **SEAT No. :**

P9295 **[Total No. of Pages : 2**

[6181]-521
B.E. (Computer Engineering)
COMPILERS
(2015 Pattern) (Semester - II) (Elective - III) (410252 B)

Time : 2½ Hours] ***[Max. Marks : 70***

Instructions to the candidates:

1) ***Attempt Q.1 or Q.2, Q.3 or Q.4, Q.5 or Q.6, Q.7 or Q.8.***
2) ***Figures to the right indicate full marks.***
3) ***Neat diagram must be drawn wherver necessary.***
4) ***Assume suitable data if necessary.***

Q1) a) What is compiler? Define lexeme, token and pattern with suitable example. **[8]**

b) Compare and contrast top-down and bottom-up parsing techniques. **[6]**

c) What is syntax tree? Construct syntax tree and postfix notation for the following expression. a + (b*c). **[6]**

OR

Q2) a) Discuss the main phases of a compiler with a brief description of each. **[8]**

b) Explain type checking and type conversion. **[6]**

c) What is Three Address code? Generate Quadruple for the below expression. **[6]**

A = B*(C+D)/E

Q3) a) Explain Activation Record. Write various fields of activation records. **[8]**

b) Discuss dangling pointers in details. Compare static and dynamic scope. **[8]**

OR

Q4) a) Compare following storage allocation schemes. **[8]**

i) Stack Storage Allocation

ii) Static Storage Allocation

iii) Heap Storage Allocation

b) Write Syntax Directed Translation for if-else construct. **[8]**

P.T.O.

Q5) a) Explain Register Allocation and Assignment in detail. **[9]**

b) Explain Labeling algorithm used in code generation. **[8]**

OR

Q6) a) What is peephole optimization? Explain its working. **[9]**

b) Discuss various issues in code generation. **[8]**

Q7) a) Discuss common code optimization techniques, such as Dead code elimination, Code movement and strength reduction. **[9]**

b) What is common sub-expression and how to eliminate it? Explain with suitable example. **[8]**

OR

Q8) a) Write short note on **[9]**

i) Data flow equation and

ii) Iterative data flow analysis

b) What is DAG based local optimization? Explain with an example. **[8]**

Total No. of Questions : 8] **SEAT No. :**

P9296 **[Total No. of Pages : 2**

[6181]-522
B.E.(Computers)
EMBEDDED & RTOS
(2015 Pattern) (Semester - II) (410252C)(Elective - III)

Time : 2½ Hours] ***[Max. Marks : 70***

Instructions to the candidates:

1) ***Answer Q.1 or Q.2, Q.3 or Q.4, Q.5 or Q.6 Q.7 or Q.8***
2) ***Neat diagrams must be drawn wherever necessary.***
3) ***Figures to the right indicate full marks.***
4) ***Assume suitable data, if necessary.***

Q1) a) What is the use of ROM image in Embedded system? Draw a structure of ROM image and explain various components embedded inside it. **[7]**

b) Explain Performance metrics for process of enbedded system? **[7]**

c) What are types of serial communication in embedded systems? **[6]**

OR

Q2) a) Explain block diagram of Embedded systems? **[7]**

b) Explain timing diagram of Analog to Digital Converter (ADC)? **[7]**

c) Explain ZigBee protocol in detail? **[6]**

Q3) a) Explain Hard versus soft real-times systems and their timing constraints? **[9]**

b) What are Functional patameters and Resource parameters of real-time process? **[8]**

OR

Q4) a) Explain Real-time task and task states with example? **[9]**

b) What are Approaches to real-time sheduling? **[8]**

Q5) a) How to Enforcing mutual exclusion and critical sections in embedded systems? **[9]**

b) What are Effects of resource contention and resource access control? **[8]**

OR

P.T.O.

Q6) a) Explain Inter-process communication in RTOS? **[9]**

b) What are Interrupt routines in RTOS environment? **[8]**

Q7) a) Explain synchronization in Real-time Operating system? **[8]**

b) What are different Medium access-control protocals for broadcast networks? **[8]**

OR

Q8) a) Explain Software development process for embedded system? **[8]**

b) What are embedded software development tools. **[8]**

Total No. of Questions : 8] **SEAT No. :**

P9297 **[Total No. of Pages : 2**

[6181]-523

B.E. (Computer Engineering)

SOFT COMPUTING AND OPTIMIZATION ALGORITHMS

(2015 Pattern) (Semester - II) (Elective - III) (410252 D)

Time : 2½ Hours] ***[Max. Marks : 70***

Instructions to the candidates:

1) ***Attempt Q.1 or Q.2, Q.3 or Q.4, Q.5 or Q.6, Q.7 or Q.8.***
2) ***Figures to the right indicate full marks.***
3) ***Neat diagrams must be drawn wherever necessary.***
4) ***Assume suitable data if necessary.***

Q1) a) Explain soft computing and it's types with detail applications. **[6]**

b) What is Fuzzy membership function? Explain its importance in fuzzy logic. **[6]**

c) Explain fuzzy inference system in detail. **[8]**

OR

Q2) a) Write short note on Fuzzification and Defuzzification. **[6]**

b) State the different properties of Fuzzy set. **[6]**

c) What is fuzzy expert system? Explain with application. **[8]**

Q3) a) Explain Historical perspective and any one evolution strategies in detail. **[8]**

b) Write short note on: **[8]**

i) Canonical evolutionary algorithm

ii) Evolutionary programming.

OR

Q4) a) Describe the components and mechanisms of a Simple Evolutionary System (EV) and what are its applications in problem-solving? **[8]**

b) Explain the importance of population size in evolutionary algorithms. How does the choice of population size impact the performance of an evolutionary algorithm? **[8]**

P.T.O.

Q5) a) What are genetic algorithms? Explain its application in detail. **[8]**

b) What is mutation? Explain Point, Substitution and swapping in detail. **[9]**

OR

Q6) a) Compare and contrast Genetic Algorithms with other traditional optimization methods. Discuss specific applications in brief. **[8]**

b) Write short note on: **[9]**

i) Selection

ii) Crossover

iii) Mutation

Q7) a) Discuss different topologies used in PSO, such as global and local topologies. How does the choice of topology impact the performance of the algorithm? **[8]**

b) Discuss the strengths and limitations of Real-valued and Binary PSO in different problem domains. **[9]**

OR

Q8) a) What is swam Intelligence? Explain particle swarm optimization algorithm in brief. **[8]**

b) Write short note on PSO and ACO. **[9]**

Total No. of Questions : 8]

SEAT No. :

P-9678

[Total No. of Pages : 2

[6181]-524

B.E. (Computer Engineering)

HUMAN COMPUTER INTERFACE

(2015 Pattern) (Semester - II) (410253B) (Elective - IV)

Time : 2½ Hours] *[Max. Marks : 70*

Instructions to the candidates:

1) ***Answer Q.1 or Q.2, Q.3 or Q.4, Q.5 or Q.6, Q.7 or Q.8***
2) ***Figures to the right indicate full marks.***
3) ***Neat diagrams must be drawn wherever necessary.***
4) ***Assume suitable data if necessary.***

Q1) a) What are different approaches for Human Computer interfaces evaluation? Explain in brief. **[8]**

b) Discuss about software life cycle in HCI. **[6]**

c) What is a prototype? Explain different approaches to prototyping. Describe with suitable figures. **[6]**

OR

Q2) a) Which are the various Implementation tools and Technologies used in HCI? Explain any two in detail. **[8]**

b) What is the basic human and computer abilities required for HCI? Explain any two of each in detail. **[6]**

c) What do you mean by user centered design? **[6]**

Q3) a) Explain S/W phases applied for the development of HCI system. **[6]**

b) What are the requirements of user support system. **[6]**

c) Discuss about Evaluation through user participation in details. **[6]**

OR

Q4) a) Explain mobile devices applied in HCI using following terms : (any Two) **[6]**

i) design

ii) limitations

iii) future enhancements

P.T.O.

b) Explain Heuristic evaluation in detail **[6]**

c) Explain Web Browsers by considering following Terms **[6]**

i) Fonts

ii) Resolution

iii) Color Pallet

iv) Orientation

v) Size

vi) Layout

Q5) a) What are the differences and Similarities between Predictive Models and Cognitive Models? **[8]**

b) Write short note on Socio-organizational Issues in HCI. **[8]**

OR

Q6) a) What is the role of Evaluation applied for Cognitive Models along with Users. **[8]**

b) Discuss about Predictive model in detail. **[8]**

Q7) a) What do you mean by Task Analysis? Which are three different approaches to task analysis? Explain each with suitable example. **[8]**

b) Define DOET? **[4]**

c) Write about next generation interface? **[4]**

OR

Q8) a) What is role of the Hierarchical model representation in designing task and structure? Explain in detail. **[8]**

b) Write short note on any two following Testing. **[8]**

i) User Testing

ii) Usability Testing

iii) User Acceptance Testing

Total No. of Questions : 8]

SEAT No. :

P9298

[Total No. of Pages : 2

[6181]-525
B.E. (Computer Engineering)
CLOUD COMPUTING
(2015 Pattern) (Semester - II) (410253 C) (Elective - IV)

Time : 2½ Hours] *[Max. Marks : 70*

Instructions to the candidates:

1) ***Attempt Q.1 or Q.2, Q.3 or Q.4, Q.5 or Q.6, Q.7 or Q.8.***
2) ***Figures to the right indicate full marks.***
3) ***Neat diagrams must be drawn wherever necessary.***
4) ***Assume suitable data if necessary.***

Q1) a) Define Cloud Computing? Discuss different cloud Computing Service Models. **[8]**

b) Describe HDFS architecture in detail. **[6]**

c) What is Virtualization? Explain its layer with diagram. **[6]**

OR

Q2) a) Explain the benefits of laaS? **[8]**

b) Write short note Google Dynamo? **[6]**

c) Draw & Explain Xen Architecture? **[6]**

Q3) a) Differentiate various services offered by AWS? **[8]**

b) Investigate use of Virtual Amazon Private Cloud? **[8]**

OR

Q4) a) Explain the significance of EBS in context with autoscaling? **[8]**

b) Write short note on AWS Storage services and Content Delivery? **[8]**

P.T.O.

Q5) a) Describe different Cloud trends in supporting ubiquitous computing? **[9]**

b) Justify how Smart Buildings is an innovative application of the IoT? **[8]**

OR

Q6) a) Write short note on RFID Tag? **[9]**

b) Explain Zigbee Technology? **[8]**

Q7) a) Explain the future of Cloud TV? **[9]**

b) What is Home based Cloud Computing? Explain with suitable example. **[8]**

OR

Q8) a) What is multimedia cloud? How telecommunication companies adapt to multimedia cloud? **[9]**

b) Discuss in detail Jungle computing? **[8]**

Total No. of Questions : 10]

SEAT No. :

P9299

[Total No. of Pages : 2

[6181]-530
B.E. (Computer Engineering)
BUSINESS INTELLIGENCE
(2015 Pattern) (Semester - II) (Open Elective - IV) (410253 DA) (Theory)

Time : 2½ Hours] *[Max. Marks : 70*

Instructions to the candidates:

1) ***Answer Q.1 or Q.2, Q.3 or Q.4, Q.5 or Q.6, Q.7 or Q.8, Q.9 or Q.10.***
2) ***Neat diagrams must be drawn wherever necessary.***
3) ***Figures to the right indicate full marks.***
4) ***Assume suitable data if necessary.***
5) ***Justify your answer with an example wherever necessary.***

Q1) a) Enlist the various business intelligence user types and explain their roles in business intelligence process. **[5]**

b) Explain with diagrammatic representation the main components of Business Intelligence system. **[5]**

OR

Q2) a) Describe the role of Business Intelligence in making a business successful. **[5]**

b) Explain how Business Intelligence system is beneficial, by considering the case study of Super Market. **[5]**

Q3) a) Define Types of Decision Support System (DSS). **[5]**

b) Write Role of Business Intelligence in DSS? **[5]**

OR

Q4) a) What is parameterizing reports and self-service reporting? **[5]**

b) Explain the extended structure of DSS? **[5]**

Q5) a) Explain the need of data pre-processing in BI. Explain various data reduction techniques. **[5]**

b) Explain following OLAP operations. **[6]**

i) Roll Up

ii) Drill Down

c) Explain techniques of data discretization and data transformation. **[6]**

OR

P.T.O.

Q6) a) What are the major tasks in data preprocessing? Explain with suitable examples. **[5]**

b) Explain the following data reduction strategies. **[6]**

i) Dimensionality Reduction.

ii) Numerosity Reduction.

c) Differentiate between OLAP & OLTP. **[6]**

Q7) a) Explain Naive Baye's Classification in detail. **[10]**

b) Explain the Hierarchical Methods of clustering. **[7]**

OR

Q8) a) Explain Apriori Algorithm and Solve by using Apriori Algorithm for following table with support 60% And confidence 80% Find the strong Association rule : **[10]**

Tid	Item set
1	f,a,c,d,g,i,m,p
2	a,b,c,f,l,m,o
3	b,f,h,j,o
4	b,c,k,s,p
5	a,f,c,e,l,p,m,n

b) Describe the essential features of decision trees in context of classification. **[7]**

Q9) a) Explain the application of Business Intelligence in banking. **[6]**

b) Explain the application of Business Intelligence for Finance management in an organization. **[6]**

c) Write a short note on ERP and Business Intelligence. **[4]**

OR

Q10)a) Explain BI Applications in CRM. **[5]**

b) Define role of business analytics with example. **[5]**

c) Explain BI Applications in Telecommunications. **[6]**

Total No. of Questions : 8]

SEAT No. : ____

P9300

[Total No. of Pages : 3

[6181]-531
B.E. (Electrical)
CONTROL SYSTEMS - II
(2015 Pattern) (Semester - I)(403145)

Time : 2½ Hours] ***[Max. Marks : 70***

Instructions to the candidates:

1) ***Solve Q.1 or Q.2, Q.3 or Q.4, Q.5 or Q.6 Q.7 or Q.8***
2) ***Figures to the right indicate full marks.***
3) ***Neat diagrams must be drawn wherever necessary.***

Q1) a) Explain in detail ZOH and FOH operation. Draw suitable diagrams. **[6]**

b) Explain with proof properties of z transform. **[6]**

c) Using Jury Stability test comment on the stability of the system described by the characteristic equation - **[8]**

$$z^4 + 3.5\,z^3 + 5z^2 + 2z + 0.5 = 0$$

OR

Q2) a) State and explain Shannon's Sampling theorem. Also discuss aliasing effect. **[6]**

b) Explain mapping of s- plane into z-plane. **[6]**

c) Explain with neat diagrams direct digital programming and standard digital programming. **[8]**

P.T.O.

Q3) a) State advantages of state space representation over transfer function approach and define the terms- **[10]**

i) state

ii) state variables

iii) state vector

iv) state space

b) With block diagram representation and writing down necessary equations, obtain state model in phase variable form for following transfer function.**[8]**

$$\frac{Y(s)}{U(s)} = \frac{30}{(s+1)(s+2)(s+5)}$$

OR

Q4) a) With suitable diagrams, explain in detail canonical and Jordan canonical forms of state space representaion. **[10]**

b) Derive the state model for armature controlled DC motor. **[8]**

Q5) a) State and derive properties of State Transition Matrix. **[8]**

b) Obtain the model matrix and diagonalize the system matrix **[8]**

$$A=\begin{bmatrix} 0 & 1 & -1 \\ -6 & -11 & 6 \\ -6 & -11 & 5 \end{bmatrix}$$

OR

Q6) a) Obtain the solution of state equation $\dot{X}=\begin{bmatrix} 0 & 1 \\ -8 & -6 \end{bmatrix} X$ Give that $X=\begin{bmatrix} 1 & 0 \end{bmatrix}^T$

Obtain STM using inverse Laplace Transform method. **[8]**

b) Explain following terms - **[8]**

i) Eigen value

ii) Eigen vector

iii) Modal matrix

iv) Vandermonde matrix

Q7) a) Explain controllability and Observability using Kalman's Test. **[8]**

b) Design a state feedback gain matrix K for the following system using Ackermann's formula if it is desire to place the poles at. $-3 \pm j2$. **[8]**

$$\dot{X} = \begin{bmatrix} -1 & 0 \\ 1 & -2 \end{bmatrix} X + \begin{bmatrix} 1 \\ 0 \end{bmatrix} u$$

OR

Q8) a) Explain with proof Duality property. Write a state model for dual system of following - **[8]**

$$\dot{X} = \begin{bmatrix} 0 & 1 \\ -5 & -4 \end{bmatrix} X + \begin{bmatrix} 0 \\ 1 \end{bmatrix} u$$

$$Y = \begin{bmatrix} 1 & -2 \end{bmatrix} X$$

b) Explain computation of Observer gain matrix using transformation matrix method. **[8]**

Total No. of Questions : 10]

SEAT No. :

P9301

[Total No. of Pages : 2

[6181]-532
B.E. (Electrical)
RESTRUCTURING & DEREGULATION
(2015 Pattern) (Semester - I) (403144 A) (Elective - II)

Time : 2½ Hours] ***[Max. Marks : 70***

Instructions to the candidates:

1) ***Answer questions Q.1 or Q.2, Q.3 or Q.4, Q.5 or Q.6, Q.7 or Q.8, Q.9 or Q.10.***
2) ***Figures to the right indicate full marks.***
3) ***Use of electronic pocket calculator is allowed.***
4) ***Assume suitable data if necessary.***
5) ***Neat diagrams must be drawn wherever necessary.***

Q1) a) Write a short note on the key objectives of National Energy Policy. **[5]**

b) Explain in detail the tariff setting principles. **[5]**

OR

Q2) a) Explain with example any two financial tools to compare investment options for any project. **[6]**

b) Explain the institutional structure of Indian power sector before restructuring. **[4]**

Q3) a) Write short notes on : Benchmarking or yardstick regulation. **[5]**

b) Explain the following concepts of power sector economics. **[5]**

i) Working Capital

ii) Capital cost

OR

Q4) a) What are the key Indices for assessment of utility performance for distribution system. **[6]**

b) Explain detail Price Cap and Revenue cap Regulation. **[4]**

Q5) a) What is a Power Exchange? What are the main features of the Day-Ahead Market (DAM)? **[8]**

b) Explain following structural models. **[8]**

i) Wholesale competition

ii) Retail competition

OR

P.T.O.

Q6) a) Explain in detail the following. **[8]**

i) Renewable Energy Certificate (REC) and trading of REC

ii) Carbon credits and trading of Carbon credits

b) Name the different ISO models and explain any two models in detail. **[8]**

Q7) Write short notes on the following. **[16]**

a) Spot markets

b) Forward contracts and forward markets

c) Future contracts and future markets

d) Ancillary services market

OR

Q8) a) Specify the peculiarities of electricity as commodity. State the rules that govern the electricity markets. **[8]**

b) Explain the concept of Market clearing price (MCP) and settlement process in context with electricity market. **[8]**

Q9) a) Explain congestion in power network. Write in brief about the methods of congestion management? **[10]**

b) Elaborate the role of : **[8]**

i) National Load dispatch centers

ii) Regional Load dispatch centers in context to Indian Power sector.

OR

Q10)a) State and explain major components of transmission costs. What are the objectives of cost allocation of transmission system? **[10]**

b) Explain the concept of open access and transmission rights. **[8]**

Total No. of Questions : 8]

SEAT No. : ____

P9302

[Total No. of Pages : 2

[6181]-533
B.E. (Electrical)
SWITCHGEAR & PROTECTION
(2015 Pattern) (Semester - II) (403147)

Time : 2½ Hours] ***[Max. Marks : 70***

Instructions to the candidates:

1) ***Answer Q.1 or Q.2, Q.3 or Q.4, Q.5 or Q.6, Q.7 or Q.8.***
2) ***Neat diagrams must be drawn whenever necessary.***
3) ***Figures to the right indicate full marks.***
4) ***Use of Non-Programmable Scientific Calculator is allowed.***
5) ***Assume suitable data, if necessary.***

Q1) a) What are the essential qualities of Protective relaying? Explain in detail. **[6]**

b) In a 220 kV system, the reactance and capacitance up to the location of circuit breaker is 8 Ω and 0.025μF respectively. A resistance of 600 Ω is connected across the contacts of the circuit breakers. Determine the following: **[7]**

i) Natural frequency of oscillations

ii) Damped frequency of oscillations

iii) Critical value of resistance which will give no transient oscillations

c) Explain the rated characteristics of High Voltage circuit breakers as per IS-2516. **[7]**

OR

Q2) a) Explain current graded and time graded overcurrent protection scheme. **[7]**

b) Explain the concept of current chopping with neat waveform. **[7]**

c) Write a short note on Autoreclosing'. **[6]**

Q3) a) Write a short note on : **[10]**

i) Antialiasing filter

ii) Sampling theorem

b) What are the abnormal operating conditions and causes of failure of 3- phase induction motor? **[8]**

OR

P.T.O.

Q4) a) Explain the merits and demerits of static relay. **[9]**

b) Explain with neat diagram single phase preventer in case of three phase induction motor. **[9]**

Q5) a) Explain the protection of alternator against: **[8]**

i) Interturn faults

ii) Loss of excitation

b) With neat diagram explain construction and working principle of Buchholz relay. State its advantages and disadvantages. **[8]**

OR

Q6) a) Explain the phenomenon of over fluxing in the transformer. Suggest suitable protection for the same. **[8]**

b) A 3 phase, 10 MVA, 11 kV alternator is provided with earth fault protection. The percentage of winding protected against phase to earth fault is 80 %. The relay trips for 20 % out of balance current. Calculate resistance to be added in neutral to ground connection. **[8]**

Q7) a) Write a short note on Wide Area Measurement System (WAMS). **[8]**

b) Explain how reactance relay is used for distance protection. Draw its characteristics on R-X diagram. **[8]**

OR

Q8) a) Explain the three stepped distance protection for transmission line with neat diagram. **[8]**

b) Explain effect of arc resistance and power swings on the performance of distance relay. **[8]**



Total No. of Questions : 10] **SEAT No. :**

P9303 **[Total No. of Pages : 2**

[6181]-534
B.E. (Electrical)
POWER ELECTRONICS CONTROLLED DRIVES
(2015 Pattern) (Semester - II) (403148)

Time : 2½ Hours] ***[Max. Marks : 70***

Instructions to the candidates:

1) ***Solve Q.1 or Q.2, Q.3 or Q.4, Q.5 or Q.6 Q.7 or Q.8 and Q.9 or Q.10.***
2) ***Neat diagrams must be drawn wherever necessary.***
3) ***Figures to the right indicate full marks.***
4) ***Use of Calculator is allowed.***
5) ***Assume suitable data, if necessary.***

Q1) a) State essential components of electrical drive and describe the function of each component in brief. **[5]**

b) Draw circuit diagram of 1ϕ, fully controlled converter fed separately excited D.C. motor and Explain working for motoring quadrant. **[5]**

OR

Q2) a) Explain load equalization in an Electric drive. How it is achieved? **[5]**

b) Explain advantages of Electric Braking over conventional braking methods. **[5]**

Q3) a) Explain Stator voltage control of an Induction motor. **[5]**

b) A 230 volt, 1000 rpm, 30 A DC separately excited motor has Rs = 0.7Ω, La = 50 mH, Motor is controlled in regenerative braking by chopper operating at 800 Hz from a dc source of 230 volts. Assume continuous conduction. Calculate the motor speed for duty ratio of 0.6 and rated motor torque. **[5]**

OR

Q4) a) Explain Dynamic Braking of D.C. Shunt motor. **[5]**

b) Explain regenerative braking of Induction motor. **[5]**

Q5) a) Explain closed loop speed control of C.S.I. Drives. **[8]**

b) Explain V/F control using C.S.I. for Induction motor drive. **[8]**

OR

P.T.O.

Q6) a) Explain flux oriented Vector control method for IM with a block diagram. **[8]**

b) Compare CSI and VSI control for IM with their related merits and demerits. **[8]**

Q7) a) Explain steps in vector control of PMSM Drive. **[8]**

b) Explain Split supply converter topology for Half wave operation of PMBLDC drive. **[8]**

OR

Q8) a) Write a short note on selection criteria of motor. Why a motor of smaller rating can be selected for a short time duty? **[8]**

b) A constant speed drive has the following duty cycle: **[8]**

i) Load rising linearly from 200 to 500 KW : 4 min

ii) Uniform load of 400KW : 2 min

iii) Regenerative power returned to the supply
Reducing linearly from 400KW to 0 : 3 min

iv) Remains idle : 4 min

Determine the power rating of the motor assuming loss to be proportional to $(\text{Power})^2$.

Q9) a) Explain solar power operated pump drive with the help of block diagram. **[6]**

b) Write a short notes on any two of the following.

i) Traction drives **[6]**

ii) Rolling mills Drives **[6]**

iii) Sugar mills Drives **[6]**

OR

Q10)a) Draw Heating and cooling diagram for periodic intermittent duty of motor and explain in brief. **[6]**

b) Write a short notes on any two of the following.

i) Electric Vehicles **[6]**

ii) Solar pumps Drives **[6]**

iii) Machine Tools **[6]**

♦ ♦ ♦

Total No. of Questions : 8]

SEAT No. :

P9304

[Total No. of Pages : 2

[6181]-535
B.E. (Electrical)
HIGH VOLTAGE ENGINEERING
(2015 Pattern) (Semester - II) (Elective - III) (403149 A)

Time : 2½ Hours] *[Max. Marks : 70*

Instructions to the candidates:

1) ***Attempt Q.1 or Q.2, Q.3 or Q.4, Q.5 or Q.6, Q.7 or Q.8.***
2) ***Neat diagrams must be drawn wherever necessary.***
3) ***Figures to the right indicate full marks.***
4) ***Assume suitable data if necessary.***

Q1) a) In an experiment in a certain gas, it was found that the steady state current is 6.5×10^{-7} A at 10kV at a distance of 0.4cm between the plane electrodes keeping the field constant and reducing the distance to 0.1 cm results in a current of 6.5×10^{-9} A. Calculate Townsend's primary ionization coefficient. If the breakdown occured when gap distance was increased to 0.9 cm what is the value of secondary ionization coefficient. **[6]**

b) Compare Cavitation and Bubble theory of liquid dielectric with Thermal Breadown theory of solid dielectrice. **[7]**

c) Explain Trigatron method of tripping and control for multistage impulse generator. **[7]**

OR

Q2) a) Derive Townsend's current growth equation in presence of primary and secondary ionization processes. State limitations of Townsend's theory. **[7]**

b) Compare treeing and tracking phenomenon in solid dielectrics. **[6]**

c) Explain the generation of High Impulse Current with a suitable diagram. Also describe its main parts. **[7]**

Q3) a) What is partial discharge? Explain the straight detection method of partial discharge measurement. **[8]**

b) Describe the generating voltmeter used for measuring high dc voltages. How does it compare with a potential divider for measuring high dc voltages? **[8]**

OR

P.T.O.

Q4) a) What is dielectric loss and dielectric constant? Explain the method of measurement of dielectric constant and loss factor. **[8]**

b) Give the basic circuit for measuring the peak voltage of **[8]**

i) ac voltage and

ii) impulse voltage

What is the difference in measurement technique in the above two cases?

Q5) a) Explain main causes of overvoltage due to switching surges. Discuss various methods to overcome problems of switching surges in power system. **[9]**

b) Explain clearly the process of "Cloud to earth" and "Return" lightning stroke. State the characteristics of such stroke and their effect when they strike EHV AC installations or lines. **[9]**

OR

Q6) a) What is insulation coordination? Explain statistical method of insulation coordination. **[9]**

b) State the different charge formation theories in clouds. Compare Wilsons Theory with Reynolds and Masons theory of charge formation. **[9]**

Q7) a) What are the significances of power factor tests and partial discharge tests on bushings? How are they conducted in laboratory? **[8]**

b) Classify the different High voltage laboratories and give salient features of each of them. **[8]**

OR

Q8) a) Explain the following terms as referred to high voltage testing: **[8]**

i) withstand voltage

ii) flashover voltage

iii) 50% flashover voltage

iv) wet and dry power frequency tests

b) Why is grounding very important in an HV laboratory? Describe a typical grounding system used. **[8]**



Total No. of Questions : 11]

SEAT No. :

P9305

[Total No. of Pages : 2

[6181]-536
B.E. (Electrical)
HVDC & FACTS
(2015 Pattern) (Semester - II)(403149B)(Elective -III)

Time : 2½ Hours] *[Max. Marks : 70*

Instructions to the candidates:

1) ***Q.7 is compulsory.***
2) ***Attempt Q.1 or Q.2, Q.3 or Q.4, Q.5 or Q.6, Q.8, or Q.9 Q.10 or Q.11.***
3) ***Neat diagrams must be drawn wherever necessary.***
4) ***Figures to the right indicate full marks.***
5) ***Use of logarithmic tables side rules, Mollier charts, electronic pocket calculator and steam tables is allowed.***
6) ***Assume suitable data, if necessary.***

Q1) Explain rectifier operation in HVDC systems with ignition delay angle and commutation overlap angle. **[7]**

OR

Q2) Compare EHV AC system with HVDC system of transmission. **[7]**

Q3) With suitable diagram discuss the layout of HVDC system. **[7]**

OR

Q4) What are different types of multi-terminal HVDC systems. **[7]**

Q5) Explain VSC based HVDC system and its detailed operation. **[6]**

OR

Q6) Explain different applications of VSC based HVDC systems **[6]**

Q7) Solve any two. **[16]**

a) With suitable diagrams explain dc link converter topologies. Which is the most commonly used converter topology? Why?

b) Explain converter control schemes for controlling output of converters and harmonic generation.

c) Discuss the need of power electronic converters in power network. What are the different challenges faced by power electronic controllers deployed in power network?

P.T.O.

Q8) a) Explain Principle of operation, V-I Characteristics and control schemes of SVC. **[10]**

b) With suitable examples explain role of STATCOM in power system. **[8]**

OR

Q9) a) With schematic diagram explain construction and operation of STATCOM. Also explain VI Characteristics of STATCOM. **[10]**

b) Discuss the applications of SVC. **[8]**

Q10)a) Explain different operating modes of UPFC by using generalised power flow controllers. **[8]**

b) With detailed diagram explain internal control structure of UPFC. **[8]**

OR

Q11)a) Elaborate Power flow studies in UPFC embedded systems. **[8]**

b) What are the different operating constraints of UPFC? **[8]**

Total No. of Questions : 8]

SEAT No. :

P-9672

[Total No. of Pages : 2

[6181]-537

B.E. (Electrical Engineering)

SMART GRID

(2015 Pattern) (Semester - II) (Elective - IV) (403150A)

Time : 2½ Hours] *[Max. Marks : 70*

Instructions to the candidates:

1) ***Solve Q1 or Q2, Q3 or Q4, Q5 or Q6, Q7 or Q8.***
2) ***Figures to the right indicate full marks.***
3) ***Neat diagrams must be drawn wherever necessary.***
4) ***Assume suitable data, if necessary.***

Q1) a) Define Smart Grid and give its functions. **[6]**

b) List different smart storage techniques and explain anyone in detail. **[6]**

c) Write a short note on real time prizing. **[8]**

OR

Q2) a) State and explain challenges of smart grid. **[6]**

b) Explain PMU and importance in smart grid. **[6]**

c) Explain the function of IED & their application. **[8]**

Q3) a) Explain the architecture of micro grid. **[8]**

b) Explain the concept of Microgrid, its need and applications. **[8]**

OR

Q4) a) Explain about protection and control of micro grid. **[8]**

b) Explain issues of Micro grid when connected. **[8]**

Q5) a) Highlight the issues related to Power Quality in Smart Grid. **[8]**

b) Describe the concept of power quality conditioners related to Smart Grid. **[8]**

OR

P.T.O.

Q6) a) Explain the concept of power quality and EMC in Smart Grid. **[8]**

b) Explain power quality audit and its importance in smart grid. **[8]**

Q7) a) Explain cloud computing and its need. **[9]**

b) Write a short note on Wi-max based communication in smart grid. **[9]**

OR

Q8) a) Write a note on Broadband Over a power line. **[9]**

b) Why cyber security is of prime importance in smart grid? How it can be achieved. **[9]**

⌘⌘⌘

Total No. of Questions : 10]

SEAT No. : ____

P9306

[Total No. of Pages : 2

[6181]-538
B.E. (Electrical)
ILLUMINATION ENGINEERING
(2015 Pattern) (Semester - II) (403150 C)

Time : 2½ Hours] ***[Max. Marks : 70***

Instructions to the candidates:

1) ***Answer Q.1 or Q.2, Q.3 or Q.4, Q.5 or Q.6, Q.7 or Q.8 Q.9 or Q.10.***
2) ***Neat diagrams must be drawn wherever necessary.***
3) ***Figures to the right indicate full marks.***
4) ***Use of logarithmic tables slide rule, Mollier charts, electronic pocket calculator and steam tables is allowed.***
5) ***Assume suitable data, if necessary.***

Q1) a) State five advantages of good lighting. **[5]**

b) Explain suitability of following materials for lamp **[5]**

i) Tungsten

ii) Ceramics

OR

Q2) a) Describe zonal cavity method for finding average illumination. **[5]**

b) With suitable diagram explain working of DC carbon are lamp. **[5]**

Q3) a) Explain constructional details of metal halide lamp with a neat sketch. **[5]**

b) Explain dependance of human activities on light. **[5]**

OR

Q4) a) With suitable diagram explain various methods of controlling natural light. **[5]**

b) Explain following terms: **[5]**

i) Beam angle

ii) Field angle

Q5) a) A room of size 20m×5m is to be illuminated by using 20 number of lamps. Each lamp is rated as 200 watt. The MSCP of each lamp is 250. Assume utilization factor 0.6 and depreciation factor 1.2, Find average illumination produced on the floor. **[8]**

b) Explain law of inverse squares with a neat diagram. **[8]**

OR

P.T.O.

Q6) a) Explain following terms. **[8]**

i) Utilization factor

ii) Specific consumption

iii) Mean spherical candle power (MSCP)

iv) Reduction factor

b) What is glare? Explain types of glare and remedies for them. **[8]**

Q7) a) With suitable diagrams, explain arrangement of luminaries for straight roads. **[8]**

b) State classification of projectors for flood lighting. With neat diagrms explain any two location of projectors for flood lighting. **[8]**

OR

Q8) a) Explain following terms for street lighting- **[8]**

i) Visual performance

ii) Contrast

iii) Glare

iv) Uniformity ratio

b) State and explain factors to be considered for flood light scheme. **[8]**

Q9) a) With a suitable diagram explain construction and working of OLED. **[9]**

b) Compare LED and LASER lights. **[9]**

OR

Q10)a) With suitable diagrams explain construction & working of light tube dome, solar tube. **[9]**

b) Explain any nine applications of Laser. **[9]**

Total No. of Questions : 8]

SEAT No. : ____

P9307

[Total No. of Pages : 2

[6181]-539
B.E. (Electronics)
VLSI DESIGN
(2015 Pattern) (Semester - I) (404201)

Time : 2½ Hours] ***[Max. Marks : 70***

Instructions to the candidates:

1) ***Answer Q.1 or Q.2, Q.3 or Q.4, Q.5 or Q.6, Q.7 or Q.8.***
2) ***Neat diagrams must be drawn whenever necessary.***
3) ***Figures to the right indicate full marks.***
4) ***Use of calculator is allowed.***
5) ***Assume suitable data, if necessary.***

Q1) a) What is power consumption in CMOS circuits? A CMOS circuit operate with VDD = 3V operating frequency of 2.8 GHz and load capacitance of 0.2 pf. Calculate dynamic power consumption. **[10]**

b) Explain body effect. **[4]**

c) What is FSM? Explain Mealy and Moore FSM with examples. **[6]**

OR

Q2) a) Realize 2 input And gate functionality using a 2:1 Mux. Write a VHDL code for the same design using behavior modeling style. **[10]**

b) What is technology scaling? What are the different types of scaling? **[10]**

Q3) a) Write a VHDL code fur a T-ff using behavior modeling style. Write its testbench waveform code to simulate the same design with optimization of time delay. **[8]**

b) Distinguish between CPLD. FPGA and ASIC programming devices. **[8]**

OR

P.T.O.

Q4) a) Explain working of IT-DRAM in detail. Sketch its read and write timing diagrams. **[8]**

b) Give classification of memories with their advantages. **[8]**

Q5) a) What are different clock distribution techniques used in floor planning? **[8]**

b) What is parasitic element? State different types of parasites present in CMOS circuit. **[9]**

OR

Q6) a) Explain FPGA input output block with a neat sketch. **[9]**

b) State Shannon's Decomposition. Write a VHDL Code to multiply 4×4 bit. **[8]**

Q7) a) Explain electrical rule check in VLSI Fabrication process. **[9]**

b) Explain in brief what is boundary scan technique and JTAG. **[8]**

OR

Q8) a) Write short note on synthesis with respect to circuit extraction. **[8]**

b) List down the different EDA tools available in market and industry with their synthesis and simulation tools. **[9]**



Total No. of Questions : 8]

SEAT No. : ____

P9308

[Total No. of Pages : 2

[6181] - 540

B.E. (Electronics)

ADVANCED POWER ELECTRONICS

(2015 Pattern) (Semester - I) (404202)

Time : 2 ½ Hours] ***[Max. Marks : 70***

Instructions to the candidates:

1) ***Answer Q.l or Q.2, Q.3 or Q.4, Q.5 or Q.6, Q.7 or Q8.***
2) ***Assume suitable data if necessary.***
3) ***Draw neat diagram wherever necessary.***

Q1) a) Draw & explain torque speed characteristics of Semiconverter feeding a separately excited D.C. motor. **[8]**

b) With circuit diagram & waveforms explain operation of single phase dual converter. **[6]**

c) Explain operation of single phase to single phase step up cycloconverter with circuit diagram & waveform. **[6]**

OR

Q2) a) With the help of circuit diagram & their associated waveforms. Explain chopper fed DC series drives. **[8]**

b) Discuss single phase to single phase step down cycloconverter. **[6]**

c) With circuit diagram & waveform explain Symmetrical Angle Control (SAC) method for power factor Improvement of controlled rectifier. **[6]**

Q3) a) Explain in detail soft acceleration & deceleration for Induction motor. **[8]**

b) Discuss working of VSI drive for 3 phase Induction motor with neat circuit diagram & waveform. **[8]**

OR

P.T.O.

Q4) a) With circuit diagram explain closed loop control of Induction motor. **[8]**

b) Explain torque - Slip characteristics of 3 phase Induction motor with neat curve stating various regions & their working mechanism. **[8]**

Q5) a) Draw & explain torque speed characteristics of synchronous reluctance motor at constant voltage & frequency. **[8]**

b) With the help of circuit diagram & waveforms explain operation of 3 phase brushless DC motor drive. State the applications of 3 phase brushless D.C. motor drive. **[8]**

OR

Q6) a) Draw circuit diagram & explain the working of chopper drive for stepper motor. **[8]**

b) Explain working principle of servo motor drive & state its advantages. **[8]**

Q7) a) What are the advantages of vertical axis over Horizontal axis type Wind Energy conversion system. **[4]**

b) State & describe various steps in solar system design. **[6]**

c) Discuss Grid connected Solar Energy system with neat diagram. **[8]**

OR

Q8) a) With diagram explain stand alone Wind Energy system. **[8]**

b) State different types of PV cells. Describe monopoly crystalline solar cell with its Merits & Demerits. **[6]**

c) Discuss selection of solar panel & inverter in Solar Energy System. **[4]**

❄ ❄ ❄

Total No. of Questions : 10]

SEAT No. :

P9309

[Total No. of Pages : 3

[6181]-541
B.E. (Electronics)
ELECTRONICS SYSTEM DESIGN
(2015 Pattern) (Semester - I)(404203)

Time : 2½ Hours] *[Max. Marks : 70*

Instructions to the candidates:

1) ***Attempt Q.1 or Q.2, Q.3 or Q.4, Q.5 or Q.6 Q.7 or Q.8, Q.9 or Q10.***
2) ***Neat diagrams must be drawn wherever necessary.***
3) ***Figures to the right indicate full marks.***
4) ***Assume suitable data, if necessary.***
5) ***Use of pocket calculator is allowed.***

Q1) a) What is need of various tests to be carried out in product development stage. How these tests carried out. **[6]**

b) What is maintainability? Discuss various steps towards maintainability. **[4]**

OR

Q2) a) Explain error budget analysis of ADC with case study. **[6]**

b) Explain Signal Conditioning circuit as design point of view with example. **[4]**

Q3) a) Explain the selection criteria of micro- controller for particular DAS application. **[4]**

b) Write short note on : **[6]**

i) LIN Bus

ii) Flex-ray Bus.

OR

Q4) a) Explain DAC and relay interfacing to microcontroller. Also write algorithm. **[4]**

b) Carry out error budget analysis of Opamp. **[6]**

Q5) a) Write short note on- **[8]**

i) Choice Between Assembly & Higher level Language

ii) Goals of Software Design.

b) What are the features of cross compiler used for programming the micro controller. **[8]**

OR

P.T.O.

Q6) a) Explain different constructs of regular programming using neat diagram. **[8]**

b) What is the need of software testing? State and explain different tools used for software testing **[8]**

Q7) a) Explain rules of PCB design for Shielding & Guarding in precision circuits. **[6]**

b) The supply and ground traces are running exactly symmetric on the opposite sides of PCB. The total length in common is 250 mm., the supply trace width is 2 mm. and the ground trace width is 4 mm. The lamination used having relative dielectric constant 5.4. Calculate the capacitance between these two traces. **[5]**

c) Explain rules of PCB Design for mixed Signal circuits. **[6]**

OR

Q8) a) A mixed signal system on signal PCB contains the following sub circuits:

i) Power supply for analog section

ii) Power supply for digital circuit

iii) Signal Conditioning circuit

iv) ADC

v) Microcontroller

vi) LCD display circuit

vii) Clock for Digital circuit & microcontroller

Discuss the detail of the recommended PCB design practices for each of the above & draw sketch indicating relative placement of their sub circuits. Justify your answer for placement. **[9]**

b) What do you understand by the term Signal Integrity? Explain various mechanisms that affect Signal Integrity in high speed digital circuits. **[8]**

Q9) a) Draw circuit of signal stage MOSFET common source amplifier & perform AC & DC analysis. **[9]**

b) Explain how simultaneous state & timing mode of Logic Analyzer helps in fault finding of high speed digital design. **[8]**

OR

Q10)a) Explain Significance of Band width. sampling rate, probe impedance, memory depth in DSO. **[8]**

b) Draw circuit diagram of transistor LC Oscillator & explain how you can make use of DC or operating point analysis & transient analysis to diagnose the circuit. **[9]**

Total No. of Questions : 8]

SEAT No. :

P9310

[Total No. of Pages :2

[6181]-542
B.E. (Electronics)
COMPUTER NETWORKS & SECURITY
(2015 Pattern) (Semester-II) (404209)

Time : 2½ Hours] *[Max. Marks : 70*

Instructions to the candidates:

1) ***Solve Q.1 or Q.2, Q.3 or Q.4, Q.5 or Q.6, Q.7 or Q.8.***
2) ***Neat diagrams must be drawn wherever necessary.***
3) ***Figures to the right indicate full marks.***
4) ***Assume suitable data, if necessary.***
5) ***Use of calculator is allowed.***

Q1) a) Compare TCP/LP with OSI reference model. **[7]**

b) Explain transmission media in detail. **[7]**

c) Explain any one multiple access technique. **[6]**

OR

Q2) a) Explain TCP/LP protocol suite in detail. **[7]**

b) Explain packet switching n/w in detail. **[7]**

c) What do mean by HDLC & PPP, hence explain it in detail. **[6]**

Q3) a) What is congestion? Explain congestion control methods. **[6]**

b) What do mean by routing? Explain shortest path routing Algorithm. **[6]**

c) Compare UDP & TCP. **[4]**

OR

Q4) a) Explain network layer design issues. **[6]**

b) Explain address resolution protocol. **[6]**

c) Explain connectionless versus connection oriented services provided by transport layer. **[4]**

P.T.O.

Q5) a) What is mean FTP? Explain in detail wrt client server communication. **[6]**

b) Write short note on: **[6]**

i) PING

ii) TRACEROUTE

c) Explain HTML programming & related tags in detail. **[6]**

OR

Q6) Write a short note on:

a) www. **[6]**

b) DNS. **[6]**

c) P_2P file sharing **[6]**

Q7) a) What is symmetric key cryptography? Explain the substitution cipher. **[8]**

b) Explain various network security attacks. **[4]**

c) How does Hash function works. **[4]**

OR

Q8) a) How is internet accessed through DSL & leased line. **[8]**

b) Explain applications of cross-over & straight through cable. **[4]**

c) What is use of protocol analyzer & network tester. **[4]**



Total No. of Questions : 8]

SEAT No. :

P9311

[Total No. of Pages : 2

[6181] - 543

B.E. (Electronics Engineering)

PROCESS INSTRUMENTATION

(2015 Pattern) (Semester - II) (404210)

Time : 2 ½ Hours] ***[Max. Marks : 70***

Instructions to the candidates:

1) ***Answer Q.l or Q.2, Q.3 or Q.4, Q.5 or Q.6, Q.7 or Q8.***
2) ***Neat diagrams must be drawn whenever necessary.***
3) ***Assume suitable data if necessary.***
4) ***Use of non-programmable scientific calculator is allowed.***

Q1) a) Compare linear processes with non-linear processes. **[6]**

b) State the equation for a PID controller. State the meaning of each term in the PID equation. Sketch circuit diagram for OP-AMP implementation of PID controller. **[7]**

c) Explain Ziegler Nichol's method of process loop tuning. Tabulate the Ziegler Nichol's tuning formulae for P, P+I and PID controller modes. **[7]**

OR

Q2) a) Define dead time. Explain the concept of dead time with suitable example. **[6]**

b) State the equation for a P+I controller. State the meaning of each term in the P+I controller equation. Sketch circuit diagram for OP-AMP implementation of P+I controller. **[7]**

c) Explain the concept of relay based tuning. State the advantages of relay based tuning. **[7]**

Q3) a) Why do we need adaptive control? Explain with neat block diagram adaptive control system. **[8]**

b) Explain cascade control scheme with the help of suitable example. **[8]**

OR

P.T.O.

Q4) a) Explain Air:Fuel ratio control scheme to maximize boiler combustion efficiency and minimize fuel use. **[8]**

b) Explain override/selective control scheme to protect a process equipment. **[8]**

Q5) a) Explain block diagram analysis of multivariable systems. **[9]**

b) Write a short note on: Relative Gain Analysis. **[8]**

OR

Q6) a) Explain interaction between control loops in a typical multivariable system. **[9]**

b) What is a batch process? Explain batch process control with respect to a batch mixing tank. **[8]**

Q7) a) Explain safety layers employed to ensure safety in chemical process plants. **[9]**

b) Explain steps involved in defining the problem in process control design. **[8]**

OR

Q8) a) Explain the hierarchy of control structure. **[9]**

b) Explain how plant performance is monitored in a typical process industry. **[8]**

❄ ❄ ❄

Total No. of Questions : 12]

SEAT No. :

P9312

[Total No. of Pages : 2

[6181]-544
B.E. (Electronics)
ARTIFICIAL INTELLIGENCE AND MACHINE LEARNING
(2015 Pattern) (Semester - II) (Elective - III) (404211 B)

Time : 2½ Hours] *[Max. Marks : 70*

Instructions to the candidates:

1) ***Attempt Q.1 or Q.2, Q.3 or Q.4,Q.5 or Q.6, Q.7 or Q.8, Q.9 or Q.10, Q.11 or .Q12.***
2) ***Neat diagrams must be drawn wherever necessary.***
3) ***Figures to the right side indicate full marks.***
4) ***Assume sutible data, if necessary.***

Q1) What is PEAS in AI? Write PEAS description for: **[7]**

a) Medical diagnosis system

b) Part-Picking Robot

OR

Q2) Define Agent. Explain model based reflex agent with the help of neat diagram.**[7]**

Q3) Explain Breadth First Search algorithm. **[6]**

OR

Q4) Explain hill climbing algorithm. With the help of a neat digarm, explain plateau, ridge, local maxima and global maxima. **[6]**

Q5) Describe the First order logic inference rules for quantifier. **[7]**

OR

Q6) Explain the Forward chaining and Backward Chaining and its properties. **[7]**

Q7) a) What is a Bayesian Belief Network and explain how it can be used for building models. **[12]**

b) How to represent AND Gate using linear classifiers. **[5]**

OR

P.T.O.

Q8) Rohit installed a new burglar alarm at his home to detect burglary. The alarm reliably responds at detecting a burglary but also responds for minor earthquakes. Rohit has two neighbors Vinay and Sundar, who have taken a responsibility to inform Rohit at work when they hear the alarm. Vinay always calls Rohit when he hears the alarm, but sometimes he got confused with the phone ringing and calls at that time too. On the other hand, Sundar likes to listen to high music, so sometimes he misses to hear the alarm. Here we would like to compute the probability of Burglary Alarm. **[17]**

Problem:

Calcualte the probability that alarm has sounded, but there is neither a burglary, nor an earthquake occurred, and Vinay and Sundar both called the Vinay.

Q9) a) Explain feed forward neural network. **[8]**

b) Explain RBF neural network. **[8]**

OR

Q10)a) Explain multilayer neural network. **[8]**

b) What is mean by back propagation? Explain. What are its advantages? **[8]**

Q11)a) Explain linear regression with the help of example. **[9]**

b) Explain strength and weakness of K means clustering. **[8]**

OR

Q12)a) Explain about hard margin SVM and soft margin SVM. **[9]**

b) With the help of example explain different types of nodes used in decision tree algorithm. Discuss about any one problem of decision tree. **[8]**



Total No. of Questions : 8]

SEAT No. :

P-9673

[Total No. of Pages : 2

[6181]-545

B.E. (Electronics Engineering)

RENEWABLE ENERGY SYSTEMS & DSM

(2015 Pattern) (Semester - II) (404212C) (Elective - IV)

Time : 2½ Hours] ***[Max. Marks : 70***

Instructions to the candidates:

1) ***Answer Q1 or Q2, Q3 or Q4, Q5 or Q6 and Q7 or Q8.***
2) ***Figures to the right side indicate full marks.***
3) ***Assume suitable data, if necessary.***

Q1) a) What distinguishes stand-alone PV systems from grid-connected PV systems in terms of functionality and applications? **[8]**

b) Could you describe the primary components of a wind energy conversion system and their individual roles in energy generation? **[6]**

c) How is biomass categorized based on its origin and composition and how does this classification influence its energy potential? **[6]**

OR

Q2) a) What distinguishes anaerobic digestion from ethanol fermentation as biomass conversion processes? **[8]**

b) What are the primary methods used to measure solar radiation availability? **[6]**

c) What role does the Tip Speed Ratio (TSR) play in optimizing the efficiency of wind turbines, especially concerning different wind speeds? **[6]**

Q3) a) How would you describe India's current energy scenario in terms of demand, supply and the challenges faced in balancing the two? **[8]**

b) What is Demand-Side Management (DSM) and why is it relevant in the Indian energy landscape? **[8]**

OR

P.T.O.

Q4) a) How does the Electricity Act in India influence the regulatory framework for the energy sector? **[8]**

b) What are the advantages of adopting an integrated resource planning approach in the energy sector, especially in a country like India with varied energy demands? **[8]**

Q5) a) What are the different classifications of Demand Response options available and how do they vary in their approach to managing energy consumption? **[8]**

b) How does an Energy Management System facilitate the implementation of Demand Response strategies? **[8]**

OR

Q6) a) What components make up the architecture for implementing Demand Response strategies? **[8]**

b) What role does the communication infrastructure play in enabling effective Demand Response mechanisms? **[8]**

Q7) a) What is the significance of load research in the energy sector, especially concerning the understanding of fluctuations in electricity demand and supply? **[9]**

b) Why are energy audits essential, and what are the different types of audits conducted in the context of energy management? **[9]**

OR

Q8) a) What methods or models are typically used in load forecasting and how do these aid in determining sector-wise and end-use load patterns? **[9]**

b) What are the fundamental procedures followed during an energy audit, from data collection to analysis? **[9]**

□□□

Total No. of Questions : 8]

SEAT No. : ____

P9313

[Total No. of Pages : 2

[6181]-546

B.E. (E & TC)

VLSI DESIGN AND TECHNOLOGY

(2015 Pattern) (Semester-I) (404181)

Time : 2½ Hours] ***[Max. Marks : 70***

Instructions to the candidates:

1) ***Attempt Q.1 or Q.2, Q.3 or Q.4, Q.5 or Q.6, Q.7 or Q.8.***
2) ***Figures to the right indicate full marks.***
3) ***Assume Suitable data if necessary.***
4) ***Neat diagram must be drawn wherever necessary.***

Q1) a) What is meant by concurrent and sequential statements in VHDL. Explore in detail with examples of each. **[6]**

b) Explain I/O Architecture in detail. **[7]**

c) Draw & Explain Architecture of CPLD. **[7]**

OR

Q2) a) Write a VHDL code for full adder using half adder. **[6]**

b) Explain supply and Ground bounce. **[7]**

c) Compare and contrast CPLD and FPGA in detail **[7]**

Q3) a) Design CMOS combinational logic $\gamma = A (B+C). D$ **[8]**

b) Derive the expression for static and dynamic power dissipation. **[8]**

OR

Q4) a) Design 2:1 multiplexer using transmission gate and compare it with conventional method. **[8]**

b) Draw CMOS Inverter and explain voltage transfer curve in detail. **[8]**

P.T.O.

Q5) a) Draw stick diagram for CMOS Inverter, NAND, NOR. **[10]**

b) Explain CMOS ASIC Design flow. **[8]**

OR

Q6) a) Explain lambda rules used for CMOS layout with proper diagram. **[10]**

b) Explain design issues like antenna effect & electro migration effect. **[8]**

Q7) a) Explain in detail struck at fault model. **[8]**

b) Write short note on BIST **[8]**

OR

Q8) a) Explain TAP controller with state diagram. **[8]**

b) What is the need of design for testability? What do you mean by observability & controllability. **[8]**



Total No. of Questions : 10]

SEAT No. :

P9314

[Total No. of Pages : 2

[6181]-547
B.E. (E & TC)
COMPUTER NETWORKS & SECURITY
(2015 Pattern) (Semester - I) (404182)

Time : 2½ Hours] *[Max. Marks : 70*

Instructions to the candidates:

1) ***Answer questions Q.1 or Q.2, Q.3 or Q.4, Q.5 or Q.6, Q.7 or Q.8, Q.9 or Q.10.***
2) ***Neat diagrams must be drawn wherever necessary.***
3) ***Figures to the right indicate full marks.***
4) ***Assume suitable data if necessary.***

Q1) a) Compare Basic service set and Extended service set in WLAN. **[6]**

b) Write short note on Gigabit Ethernet. **[4]**

OR

Q2) a) Draw Bluetooth architecture explain function of different layer in Bluetooth. **[6]**

b) Write short note on congestion control. **[4]**

Q3) a) Give general format of ICMP and explain different types of error reporting messages used in ICMP? **[6]**

b) Compare IPV4 and IPV6? **[4]**

OR

Q4) a) Draw and explain IPV6 format. **[6]**

b) What is IGMP? How does it used? **[4]**

Q5) a) Enlist various Transport Layer protocols and compare any two of them. **[7]**

b) What are differences in IP address and Port number? **[4]**

c) Which layer is responsible for process to process delivery? Which address plays important role in process to process delivery? Why TCP is called process processing delivery protocol? **[6]**

OR

P.T.O.

Q6) a) Enlist and Explain SCTP services? **[7]**

b) Draw and explain UDP header in details. **[4]**

c) Draw TCP header and Explain function of each field. **[6]**

Q7) a) How does DNS work? How do I find my DNS? **[5]**

b) How do I find my URL? Is Google a URL? What is an HTTP COOKIE and is it bad? **[6]**

c) Explain types of Web Documents in detail? Is web development same as website? **[6]**

OR

Q8) a) Explain basic functions of Electronic mail. What are the types of Electronic Mail? **[5]**

b) Write short note on **[6]**

i) FTP

ii) SNMP

c) Enlist the functions of Network Management System? How the network management system works? **[6]**

Q9) a) Define cryptography and explain all types of Ciphers? **[8]**

b) Generate the Public Key and Secret Key for following prime number using RSA algorithm? **[8]**

P=3, Q=11, take E=5

OR

Q10)a) What is SSL? How does it provide security at Transport Layer? **[8]**

b) Write short note on **[8]**

i) PGP

ii) Firewalls

Total No. of Questions : 8]

SEAT No. : ____

P9315

[Total No. of Pages : 2

[6181] - 548

B.E. (E&TC)

RADIATION AND MICROWAVE TECHNIQUES

(2015 Pattern) (Semester - I) (404183)

Time : 2 ½ Hours] ***[Max. Marks : 70***

Instructions to the candidates:

1) ***All questions are compulsory.***
2) ***Neat diagrams must be drawn wherever necessary.***
3) ***Figures to the right indicate full marks.***
4) ***Assume suitable data; if necessary.***
5) ***Use of calculators is allowed.***

Q1) a) Derive the fundamental equation for free space propagation. **[8]**

b) Compare infinitesimal dipole, small dipole & Half wave dipole using following parameters. **[6]**

i) Electrical length

ii) Current distribution

iii) Electric field intensity

iv) Radiation resistance

v) Directivity

vi) Radiation pattern

c) For an air filled rectangular wave guide of dimensions a=4cms and b=3cms. Find all the modes which will propagate at 5000MHz. **[6]**

OR

Q2) a) Define &explain following Antenna parameters. **[6]**

i) Power Gain

ii) Effective Length

iii) Efficiency of antenna

b) Draw radiation pattern of broad side array and explain principle of working. Derive expression for null direction, side lobe maxima. **[8]**

c) What is a cavity resonator? Draw and explain re-entrant cavity resonator. **[6]**

P.T.O.

Q3) a) With neat schematic diagram explain the operation of Gyrator. Also state S matrix for it. **[8]**

b) Explain faraday's rotation principle. Explain in brief the working principle of nonreciprocal 3 port circulator with s matrix? **[8]**

OR

Q4) a) With the help of neat diagram, s-matrix & properties explain H plane Tee? **[8]**

b) Draw & explain two hole directional coupler? Also derive s-matrix for it? **[8]**

Q5) a) How the oscillations are sustained in cavity magnetron? Explain phase focusing effect. **[8]**

b) Explain in detail construction, Operation, equivalent circuit & applications of PIN diode? **[8]**

OR

Q6) a) What are linear beam tubes? Explain construction, operation & applications of two cavity klystron? **[8]**

b) Write a short note on Schottky Barrier diode; also explain difference between P-N junction diode and Schottky Barrier Diode. **[8]**

Q7) a) Explain Microwave Terrestrial Communication System. Also differentiate between Satellite and Terrestrial Communication System. **[8]**

b) Explain in detail measurement of low, medium and high microwave power. **[10]**

OR

Q8) a) Write short note on : **[12]**

i) Effect of microwave radiations on human.

ii) Applications of Microwaves.

iii) Use of Hybrid Tee for measurement of impedance of unknown load.

b) Calculate Standing Wave Ratio of a transmission system operating at a 10GHz. Assume TE10 wave transmitting inside a wave guide of dimensions a=4cm & b=2.5 cm. Distance between twice minima power points is 1mm on slotted line. **[6]**

❄ ❄ ❄

Total No. of Questions : 10]

SEAT No. :

P9316

[Total No. of Pages : 2

[6181]-549
B.E. (E & TC)
EMBEDDED SYSTEM & RTOS
(2015 Pattern)(Elective-I) (Semester-I)(404184C)

Time : 2½ Hours] *[Max. Marks : 70*

Instructions to the candidates:

1) ***Neat diagrams must be drawn wherever necessary.***
2) ***Figures to right indicate full marks.***
3) ***Assume suitable data, if necessary.***

Q1) a) Define following Terms :- **[5]**

i) Time to market,

ii) Latency,

iii) NRE Cost,

iv) Unit Cost,

v) Flexibility

b) Explain V-shaped model. State its merits and demerits. **[5]**

OR

Q2) a) Explain Typical process for Embedded System development. **[5]**

b) Comment on commercial RTOS. **[5]**

Q3) a) Comment on significance of Interprocess communication. **[5]**

b) Explain RTOS services **[5]**

OR

Q4) a) Explain any 03 queue functions **[5]**

b) Explain real times scheduling algorithm. **[5]**

Q5) a) Explain different ARM process series, its version and features. **[8]**

b) Explain CMSIS standard in detail. **[8]**

OR

Q6) a) How interrupt structure of cortex is different from ARM7. **[8]**

b) Draw interfacing diagram of motor control using PWM with LPC1768. Write down program or algorithm for the same. **[8]**

P.T.O.

Q7) a) Explain Linux Kernel architecture and its configuration. **[9]**

b) Explain the role of boot loader in Embedded linux system? What are the characteristics of the same. **[9]**

OR

Q8) a) Explain Linux file system. What is journaling flash file system? What are advantages of the same. **[9]**

b) Explain the following tool utilities Minicomp, BusyBox, Red Boot. **[9]**

Q9) a) Write a program for Arduino board to read analog input and convert it into digital. **[8]**

b) Explain with the help of case study, the application development using Arduino board. **[8]**

OR

Q10)a) Draw an interfacing diagram of 4 LEDs with Arduino board, write a program for the same. **[8]**

b) What is Arduino Uno? Explain standard libraries in Arduino. **[8]**

Total No. of Questions : 8]

SEAT No. : [ ]

P9317

[Total No. of Pages : 2

[6181]-550

B.E. (E&TC)

MOBILE COMMUNICATION

(2015 Pattern) (Semester-II) (404189)

Time : 2½ Hours] ***[Max. Marks : 70***

Instructions to the candidates:

1) ***Answer Q.1 or Q.2, Q.3 or Q.4, Q.5 or Q.6, Q.7 or Q.8.***
2) ***Neat diagrams must be drawn wherever necessary.***
3) ***Figures to the right side indicate full marks.***
4) ***Assume suitable data; if necessary.***
5) ***Use of calculators is allowed.***

Q1) a) Define the following terms **[6]**

i) Grade of Service

ii) Traffic Intensity

iii) Lost Calls

b) Determine the availability and unavailability for systems with a single and dual processor, If MTBF of 1000 hours and MTTR of 3 hours. The exchange life is 20 years **[6]**

c) Explain the following terms related with cellular concept **[8]**

i) Cell dragging

ii) Dwell time

iii) Umbrella cell concept

OR

Q2) a) Draw and explain the elements of switching system. **[8]**

b) Over a 20 minutes observation interval 40 subscribers initiate a call, Total duration of call is 4800 sec. Calculate load offered to network by the subscribers and average subscriber traffic? **[6]**

c) What is co-channel interference and adjacent channel interference in a Mobile Cellular System? **[6]**

P.T.O.

Q3) a) Explain following Data Services in GSM?

i) Tele services **[1]**

ii) Bearer Services **[2]**

iii) Supplementary Services with 5 suitable examples **[3]**

b) Draw neat diagram of GSM Architecture with three major interfaces and its functions and explain the function of SIM, BTS, BSC? **[10]**

OR

Q4) a) Explain in details Network Switching Subsystem? **[10]**

b) Explain the function of MSC, HLR, VLR, EIR, AUC, and OMC in GSM Architecture? **[6]**

Q5) a) Explain how Data is sent and received from base stations utilizing two different channels in the multiple access technique? **[8]**

b) Compare TDMA, FDMA and CDMA on following points only? **[8]**

i) Synchronization

ii) BW

iii) Frequency reuse

iv) Voice Channel

v) Usable Channel

vi) Controlled Channel

vii) Voice calls per sector

OR

Q6) a) State and explain GSM logical Traffic channels in details? **[8]**

b) Draw and explain GSM burst structure? **[8]**

Q7) a) Discuss requirements of 5G **[8]**

b) Explain LTE frame structure in detail **[6]**

c) Explain open wireless 5G architecture **[4]**

OR

Q8) a) Draw and explain LTE architecture **[6]**

b) List specifications of LTE **[6]**

c) List disruptive technologies in 5G and explain any two technologies. **[6]**

● ● ●

Total No. of Questions : 8]

SEAT No. :

P-9663

[Total No. of Pages : 2

[6181]-551
B.E. (Electronics & Tele Communication)
BROADBAND COMMUNICATION SYSTEMS
(2015 Pattern) (Semester - II) (404190)

Time : 2½ Hours] ***[Max. Marks : 70***

Instructions to the candidates :

1) ***Answer Q.1 or Q.2 and Q.3 or Q.4 and Q.5 or Q.6 and Q.7 or Q.8.***
2) ***Figures to the right indicate full marks.***
3) ***Draw neat diagrams wherever necessary.***
4) ***Assume suitable data if necessary.***

Q1) a) What is single mode step index fiber? Compare Multimode step index and graded index fiber. Draw index profile for each fiber type. **[7]**

b) Explain the link power budget for point-to-point optical fiber link. Write an expression for the power budget. **[7]**

c) Explain SOA and explain its usage in optical fiber. **[6]**

OR

Q2) a) Enlist and Explain losses observed in Optical Fiber. **[7]**

b) Based on the Following Points. Compare PIN photodiode and APD **[7]**

i) Responsivity
ii) Speed
iii) Sensitivity

c) Draw and Explain Optical isolators and circulators. **[6]**

Q3) a) Explain LEO, MEO, GEO satellite orbits. **[8]**

b) Explain Launching Process and Launch vehicles used in satellite. **[8]**

OR

Q4) a) State and explain Kepler's laws of planetary motion. **[8]**

b) Explain with a diagram the following terms concerning satellite communication. **[8]**

i) Apogee,
ii) Perigee
iii) Azimuth angle
iv) Elevation angle

P.T.O.

Q5) a) Explain with the help of a block diagram typical tracking, telemetry command and monitoring system. **[8]**

b) Explain different types of antenna used for satellite communication. **[8]**

OR

Q6) a) What is a Communication Subsystem? Explain it in detail. **[8]**

b) Dra and explain the Single and Double conversion transponder. **[8]**

Q7) a) What are the different steps required for satellite Uplink design? **[9]**

b) Explain the following terms with mathematical equations concerning satellite communication. **[9]**

i) Path loss

ii) EIRP

iii) C/I Ratio

OR

Q8) a) A C-band earth station has an antenna with a transmit gain of 54dB. The transmitter output power is set to 100W at a frequenc of 6.100GHz. The signal is received by a satellite at a distance of 37,500 km by an antenna with a gain of 26 dB. The signal is then routed to a transponder with a noise temperature of 500K a bandwidth of 36 MHz and a gain of 110 dB. calculate **[9]**

i) The path loss at 6.1 GHz, the wavelength is 0.04918m.

ii) The power at the output port of the satellite antenna in dBW.

iii) Calculate the noise power at the transponder input, in dBW, in a bandwidth of 36 MHz. Assume Boltzman's constant K = –228.6 dBW.

iv) Calculate the C/N ratio, in dB, in the transponder.

b) What is System noise temperature? Drive mathematical relation for System noise temperature. **[9]**

▽▽▽▽

Total No. of Questions : 8]

SEAT No. :

P9318

[Total No. of Pages : 2

[6181]-552
B.E. (E & TC)
MACHINE LEARNING
(2015 Pattern) (Semester - II) (404191 A) (Elective - III)

Time : 2½ Hours] *[Max. Marks : 70*

Instructions to the candidates:

1) ***Attempt Q.1 or Q.2, Q.3 or Q.4, Q.5 or Q.6, Q.7 or Q.8.***
2) ***Figures to the right indicate full marks.***
3) ***Neat diagrams must be drawn wherever necessary.***
4) ***Assume suitable data if necessary.***

Q1) a) For 5 pairs of observations the following results are obtained $\Sigma X = 15$, $\Sigma Y = 25, \Sigma X^2 = 55, \Sigma Y^2 = 135, \Sigma XY = 83$ Find the equation of the lines of regression and estimate the value of X on the first line when Y = 12 and value of Y on the second line if X = 8. **[8]**

b) Compare parametric and non-parametric learning. **[6]**

c) What is the need for Dimensionality Reduction in Machine Learning? Explain how PCA is used for Dimensionality Reduction. **[6]**

OR

Q2) a) List the features of Support Vector Machine (SVM). Compare SVM classifier with logistic regression classifier. **[8]**

b) What is Machine Learning? Describe Unsupervised Learning. Name two algorithms of it. **[6]**

c) Compare PCA and LDA. **[6]**

Q3) a) Implement AND function using McCulloch-Pitts Neuron (MP) neuron model. **[8]**

b) List the various features of ANN.Compare an artificial neuron to a biological neuron. **[8]**

OR

P.T.O.

Q4) a) Describe how a neuron is trained using Hebb's learning rule? **[8]**

b) State any four activation functions used in ANN. Discuss these functions along with their properties. **[8]**

Q5) a) Describe the Back propagation algorithm with the help of suitable example. **[8]**

b) Differentiate between Feedback and feed Forward Neural networks. **[8]**

OR

Q6) a) What are Self Organizing Feature Maps (SOFM). Justify with an example that "SOFMs are topology preserving networks". **[8]**

b) What is radial basis function network? Explain with architecture. **[8]**

Q7) a) How does Deep Learning overcome the challenges in conventional machine learning techniques? Draw and explain the architecture of Convolutional Neural Networks (CNN). **[10]**

b) Define deep learning. What is the need of deep learning, Justify with proper Example. **[8]**

OR

Q8) a) Explain ReLU activation function in detail. How are different variants advantageous over ReLU? **[10]**

b) Why pooling layer is used in CNN architecture? Explain with suitable example, **[8]**

i) Max

ii) Min and

iii) Average pooling technique.

Total No. of Questions : 10]

SEAT No. : ____

P9319

[Total No. of Pages : 2

[6181]-553
B.E. (E & TC)
PLC & AUTOMATION
(2015 Pattern) (Semester - II) (404191 B) (Elective - III)

Time : 2½ Hours] ***[Max. Marks : 70***

Instructions to the candidates:

1) ***Answer questions Q.1 or Q.2, Q.3 or Q.4, Q.5 or Q.6, Q.7 or Q.8, Q.9 or Q.10.***
2) ***Neat diagrams must be drawn wherever necessary.***
3) ***Figures to the right indicate full marks.***
4) ***Assume suitable data, if necessary.***

Q1) a) Explain control System evaluation criteria. **[5]**

b) Write short note on Process Control Principle. **[5]**

Q2) a) Explain Supervisory Control System with suitable diagram. **[5]**

b) Write short note on Need of Automation. **[5]**

Q3) a) Explain current and voltage signal transmission systems along with advantages and disadvantages. **[5]**

b) Write short note on PAC. **[5]**

Q4) a) Write short note on stepper motor. **[5]**

b) What is sensor compensation and linearization technique? Why it is necessary? **[5]**

Q5) a) Explain different Timers and counters with respect to PLC. **[8]**

b) Draw a ladder diagram for a three-motor system having the following conditions: **[10]**

Motor 2 (M2) can start 5 seconds after Motor 1 (M1) starts, when M2 is running, Motor 3 (M3) can be started. When M2 is turned off, M3 is off. When M1 is turned off, both M2 and M3 stop.

P.T.O.

Q6) a) Write list of important PLC specifications referred in selection of PLC for industrial automation. **[8]**

b) The level control system of water tank has two level switches LS1 and LS2 as shown in Fig. such that when water level> L1, LSI is ON, i.e. Design the Ladder diagram to achieve the following objective. **[10]**

i) When water level>L1 and <L2 motor pump is ON.

ii) Otherwise for all other conditions motor pump should be OFF.

iii) When water level is > L2 feed valve should be OFF.

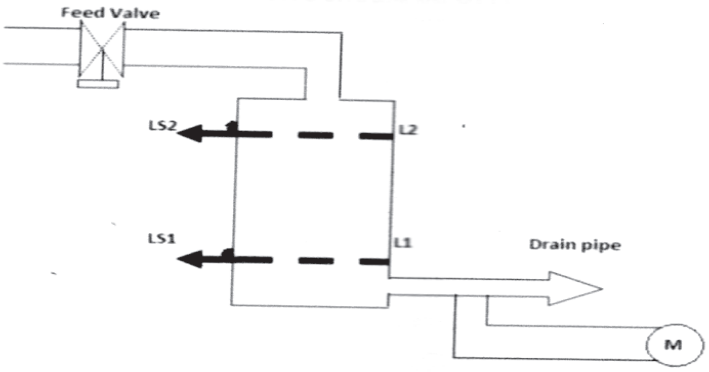

Q7) a) Explain the elements of SCADA. **[8]**

b) Explain architecture of DCS in detail. **[8]**

Q8) a) Explain MTU and RTU along with their functions. **[8]**

b) Explain in detail about any one application of SCADA. **[8]**

Q9) a) Explain the CNC machine along with its advantages. **[8]**

b) Write short note on **[8]**

i) HART Protocol

ii) Can bus

Q10)a) What is the role of Panel Engineering in automation? **[8]**

b) Write short note on

i) Profibus

ii) Ethernet **[8]**

Total No. of Questions : 10]

SEAT No. :

P9320

[Total No. of Pages : 2

[6181]-554

B.E. (Electronics & Telecommunication)

AUDIO VIDEO ENGINEERING

(2015 Pattern) (Semester - II) (Elective - III) (404191 E) (Theory)

Time : 2½ Hours] *[Max. Marks : 70*

Instructions to the candidates:

1) ***Answer questions Q.1 or Q.2, Q.3 or Q.4, Q.5 or Q.6, Q.7 or Q.8, Q.9 or Q.10.***
2) ***Neat diagrams must be drawn wherever necessary.***
3) ***Figures to the right indicate full marks.***
4) ***Use of calculator is allowed.***
5) ***Assume suitable data if necessary.***

Q1) a) Explain the PAL encoder using block diagram. **[5]**

b) Draw a neat sketch of composite video signal indicating the numberical values for different timings of various pulses used in CCIR - B Standard. **[5]**

OR

Q2) a) Explain the terms. **[5]**

i) Horizontal and vertical resolution.

ii) Kell factor.

iii) Interlaced scanning.

b) What is significance of weighted signals in television? Explain these signals with for PAL & NTSC. **[5]**

Q3) a) Explain the various Digital TV signals and parameters. **[5]**

b) What is MAC signal? What are various types of MAC? Draw D2 MAC signal **[5]**

OR

Q4) a) Compare LED, LCD and plasma display devices. **[5]**

b) In brief discuss the MPEG standard for compression of signal. **[5]**

P.T.O.

Q5) a) Draw a neat block diagram of HDTV transmitter and Explain function of each block. **[8]**

b) Write a short note on digital satellite TV. **[8]**

OR

Q6) a) Compare IPTV and Internet TV. **[8]**

b) With suitable block diagram Explain CCTV system in detail. **[8]**

Q7) a) Write a short note on **[10]**

i) Video on demand.

ii) Conditional Access system (CAS).

b) Draw and explain Direct to Home TV (DTH). List the advantages of DTH. **[8]**

OR

Q8) a) Explain the basic principle of optical recording and reproduction with suitable block diagram. **[10]**

b) Explain Wi-Fi TV with block diagram in detail. **[8]**

Q9) a) Explain the principle of DVR. How it is differing than VCR. **[8]**

b) Compare CD, DVD and Blue ray DVD. Draw the block diagram of CD recording and Explain. **[8]**

OR

Q10)a) Define reverberation time? Explain the importance of reverberation. What are the factors on which reverberation time depends? **[8]**

b) Enlist the basic requirements of PA system. Draw block diagram of typical cordless PA system. Explain it in detail. **[8]**

Total No. of Questions : 10] **SEAT No. :**

P9321 **[Total No. of Pages : 2**

[6181]-555
B.E. (Electronics & Telecommunication)
ROBOTICS
(2015 Pattern) (Semester - II) (Elective - IV) (404192 A)

Time : 2½ Hours] ***[Max. Marks : 70***

Instructions to the candidates:

1) ***Answer Q.1 or Q.2, Q.3 or Q.4, Q.5 or Q.6, Q.7 or Q.8 Q.9 or Q.10.***
2) ***Neat diagrams must be drawn wherever necessary.***
3) ***Figures to the right indicate full marks.***
4) ***Assume suitable data, if necessary.***

Q1) a) Define the terms: **[5]**

i) Degree of Freedom

ii) Work envelop

iii) Payload

iv) Repeatability

v) Precision

b) Write and explain any two industrial applications of the robots. **[5]**

OR

Q2) a) Draw neat sketch showing basic building blocks of a robotic system. Explain the function of each block. **[6]**

b) Explain the role of actuator in a robot. Explain any one with neat sketch. **[4]**

Q3) a) Explain the working of the following types of grippers. **[4]**

i) Vacuum type

ii) Magnetic type

b) List types of end effector. Explain the selection criterion for each type for various applications? **[6]**

OR

Q4) a) Explain the Pneumatically controlled prismatic joint with the help of neat sketch. **[6]**

b) Compare different drive systems used in robotics? **[4]**

P.T.O.

Q5) a) Differentiate between direct kinematics and inverse kinematics problems. **[8]**

b) Sketch neat Joint & link diagram and define the terms: **[8]**

i) Joint angle

ii) Joint distance

iii) Link length

iv) Link twist angle

Name the variable parameters for the revolute and prismatic joints.

OR

Q6) a) Define following terms: **[8]**

i) Static force

ii) Moment Transformation

iii) Solvability

iv) Stiffness

b) What do you understand by link inertia tensor and manipulator inertia tensor? **[8]**

Q7) a) Write note on Different feedback sensors used in robotics. **[8]**

b) How does line follower robot works. Write any one line following algorithm in detial? **[8]**

OR

Q8) a) What are the recent advances in the field of robotics? What are the challenges in this field? **[8]**

b) Explain and compare different methods of Robot Programming? **[8]**

Q9) a) Draw & Explain the Role of Robots in material handling and assembly? **[8]**

b) Explain the term Work envelop & Work Volume Draw Work envelop For the following types of robot **[6]**

i) Cartesian robot

ii) Cylindrical robot?

c) Wrie short notes on Human Robot Interaction? **[4]**

OR

Q10)a) Explain industrial applications of vision controlled robotics system. **[6]**

b) Draw & Describe giving appropriate examples how robots can be used for material handling and assembly? **[12]**

Total No. of Questions : 8]

SEAT No. : ____

P9322

[Total No. of Pages : 2

[6181] - 556

B.E. (Electronics & Telecommunication)

BIOMEDICAL ELECTRONICS

(2015 Pattern) (Semester - II) (Elective - IV) (404192 B)

Time : 2 ½ Hours] ***[Max. Marks : 70***

Instructions to the candidates:

1) ***Answer Q1 or Q2, Q3 or Q4, Q5 or Q6, Q7 or Q8.***
2) ***Neat diagrams must be drawn wherever necessary.***
3) ***Figures to the right side indicate full marks.***
4) ***Use of Calculator is allowed.***
5) ***Assume Suitable data if necessary.***

Q1) a) Write a short note on active and passive transducer for measurement of bio signal. **[8]**

b) What are Heart murmurs? Explain it with suitable diagrams. **[4]**

c) State the applications of microelectrodes, skin surface electrodes and needle electrodes. **[8]**

OR

Q2) a) Explain how Bio electrode is a transducer. Draw Equivalent circuit of a Bio Electrode. **[8]**

b) What is Einthoven's triangle? Explain its significance with neat sketch. **[4]**

c) State types of EEG signals and explain how they can be used to diagnose a disease. **[8]**

Q3) a) Explain the significance of Isolation amplifier with neat diagram. **[8]**

b) Explain grounding and shielding techniques. **[8]**

OR

Q4) a) Explain the significance of Right Leg drive in ECG instrumentation system with respect to common mode rejection ratio. **[8]**

b) Explain Weiner filter for noise removal from biosignal with suitable block diagram and state the equation. **[8]**

P.T.O.

Q5) a) State the low frequency and high frequency artifacts which contaminate the signal and discuss how Butterworth filters can remove them from ECG signal. **[8]**

b) Explain the importance of multiscale analysis in biosignals. **[8]**

OR

Q6) a) Explain Pan Tompkins algorithm with suitable equations. **[8]**

b) State an algorithm to classify normal and abnormal ECG beats. **[8]**

Q7) a) Explain noninvasive method to measure blood pressure. **[10]**

b) Write a short note on any two [8]

i) Defibrillators

ii) Pacemakers

iii) Bedside monitoring systems

OR

Q8) a) Write a short note on any two. **[10]**

i) Cardiac Monitors

ii) Spirometers

iii) Advantages and disadvantages of CT Scan

b) State and explain any 4 dental instruments involved in dentistry. **[8]**

❄ ❄ ❄

Total No. of Questions : 8]

SEAT No. : ____

P9323

[Total No. of Pages : 2

[6181] - 557

B.E. (E&T/C)

WIRELESS SENSOR NETWORKS

(2015 Pattern) (Semester - II) (404192 C) (Elective - IV)

Time : 2 ½ Hours] ***[Max. Marks : 70***

Instructions to the candidates:

1) ***Solve Q.1 or Q.2, Q.3 or Q.4, Q.5 or Q.6, Q.7 or Q.8.***
2) ***Neat diagrams must be drawn wherever necessary.***
3) ***Figures to the right indicate full marks.***

Q1) a) What are the different performance metrics in WSN? Explain briefly. **[6]**

b) Write a short note on Naming and addressing in WSN. **[6]**

c) What are different architecture of WSN? Explain with the help of suitable diagrams. **[8]**

OR

Q2) a) Explain hardware block diagram of a sensor node with functions of each element. **[6]**

b) State the properties of wireless communications. **[6]**

c) Compare specifications of Bluetooth and Wibree protocols. **[8]**

Q3) a) Explain the proximity schemes and ranging schemes for localization in WSN. **[6]**

b) What is routing? Explain full network broadcast routing with the help of suitable diagram. **[6]**

c) Explain routing metrics parameters in brief. **[4]**

OR

Q4) a) Explain Directed diffusion routing with the help of suitable diagram. **[8]**

b) Describe Geographical Energy Aware Routing (GEAR) protocol with the help of suitable diagram. **[8]**

P.T.O.

Q5) a) Why clustering is necessary in sensor networks? Explain the clustering structure in detail. **[8]**

b) Elaborate security issues in WSN. **[6]**

c) What is meant by Denial-of-service attack in WSN? **[4]**

OR

Q6) a) Write a short note on Geographic clustering. **[6]**

b) Explain defensive measures for large layer oriented attacks in WSN. **[6]**

c) What are network layer attacks in WSN? **[6]**

Q7) a) Explain topology problems in WSN deployment. **[6]**

b) Explain Testing and validation in WSN with the help of suitable flowchart. **[6]**

c) What is Lifetime problem in WSN? **[4]**

OR

Q8) a) Explain Top-down design approach in WSN. **[6]**

b) What are the problems in WSN deployment? **[4]**

c) Explain agricultural application of WSN with the help of suitable diagram. **[6]**

❄ ❄ ❄

Total No. of Questions : 8]

SEAT No. : ____

P9324

[Total No. of Pages : 2

[6181] - 558

B.E. (E&TC)

RENEWABLE ENERGY SYSTEMS

(2015 Pattern) (Semester - II) (404192 D) (Elective - IV)

Time : 2 ½ Hours] ***[Max. Marks : 70***

Instructions to the candidates:

1) ***Attempt Q1 or Q2, Q3 or Q4, Q5 or Q6, Q7 or Q8.***
2) ***Figures to the right indicate full marks.***
3) ***Neat diagram must be draw whenever necessary.***
4) ***Use of electronic pocket calculator is allowed.***
5) ***Assume suitable data, if necessary.***

Q1) a) Briefly write about the different forms of energy. **[8]**

b) With neat diagram explain flat plate solar collector. **[6]**

c) Define efficiency and Explain the reasons for low efficiency of solar cells **[6]**

OR

Q2) a) Draw and Explain Grid interactive. **[8]**

i) On grid solar system

ii) Off grid solar system

b) What are the advantages & limitations of renewable energy sources? **[6]**

c) Write short note on spectral distribution of extraterrestrial radiation and terrestrial radiation. **[6]**

Q3) a) List and explain different types of rotors used in wind turbine. **[8]**

b) Draw and explain wind power generation curve. **[6]**

c) Write a note on wind energy extraction. [4]

OR

Q4) a) Discuss the various methods of estimating the wind energy potential. **[8]**

b) What are the advantages and disadvantages of WEC systems. **[6]**

c) What are the environmental impacts of wind energy. **[4]**

P.T.O.

Q5) a) Explain Flashed steam system of Geothermal power generation. **[8]**

b) What do you mean by tidal energy? Explain tidal characteristic which helps to generate tidal energy? **[8]**

OR

Q6) a) Describe the closed cycle OTEC system. **[8]**

b) Draw load duration curve and explain the important factors needed to absorb tidal power into grid supply? **[8]**

Q7) a) List different types of fuel cells and explain Phosphoric acid fuel cell (PAFC) with neat diagram. **[8]**

b) Draw and explain operating characteristics of fuel cells. **[8]**

OR

Q8) a) Give the advantages and disadvantages of fuel cell power plant. **[8]**

b) Explain. **[8]**

i) Alkaline Fuel Cell

ii) Polymer electrolyte fuel cell

❄ ❄ ❄

Total No. of Questions : 10]

SEAT No. :

P-9679

[Total No. of Pages : 2

[6181]-559

B.E. (Electronics and Telecommunication Engineering)

DATA SCIENCE & ANALYTICS

(2015 Pattern) (Semester - II) (Open Elective) (404192DD)

Time : 2½ Hours] *[Max. Marks : 70*

Instructions to the candidates:

1) ***Answr Q1 or Q2, Q3 or Q4, Q5 or Q6, Q7 or Q8 and Q9 or Q10.***
2) ***Figures to the right side indicate full marks.***
3) ***Assume suitable data, if necessary.***

Q1) a) Explain purpose of database system in detail. **[6]**

b) Enlist and explain databases languages in detail. **[4]**

OR

Q2) a) What is NoSQL? Explain in detail with example. **[6]**

b) Differentiate structured and un structured data with example. **[4]**

Q3) a) Enlist and explain characteristics of SQL. **[6]**

b) Write queries for creating, adding record and dropping table. Table fields should be name, surname and address. **[4]**

OR

Q4) a) What is big data? Discuss characteristics of big data with suitable examples. **[6]**

b) Explain drivers of Big data analytics in detail. **[4]**

Q5) a) Discuss various phases of data analytics lifecycles in detail. **[6]**

b) What are different steps in data preprocessing? Explain each in short. **[6]**

c) Write a short note on model planning. **[6]**

OR

P.T.O.

Q6) a) Enlist and explain key roles for analytic projects. **[6]**

b) Write a short note on model building. **[6]**

c) Discuss operationalization in detail with example. **[6]**

Q7) a) Enlist and explain any five basic statistics operation in R programming language in detail. **[8]**

b) Discuss any four generic functions IR-programming. **[8]**

OR

Q8) a) Discuss data exploration and presentation using R-Programming. **[8]**

b) Write and explain instruction in R-programming for data visualization. **[8]**

Q9) a) What is association Rules explain in detail. **[8]**

b) Write short note on : **[8]**

i) Apriori Algorithm

ii) Linear regression

OR

Q10) a) Write and explain algorithm of K-means clustering. **[8]**

b) Write and explain algorithm of decision tree. **[8]**

⌘⌘⌘

Total No. of Questions : 10]

SEAT No. :

P9325

[Total No. of Pages : 2

[6181]-560

B.E. (Information Technology)

SOFTWARE TESTING & QUALITY ASSURANCE

(2015 Pattern) (Semester - I) (Elective - II) (414457 C)

Time : 2½ Hours] *[Max. Marks : 70*

Instructions to the candidates:

1) ***Answer Q.1 or Q.2, Q.3 or Q.4, Q.5 or Q.6, Q.7 or Q.8 Q.9 or Q.10.***
2) ***Draw neat diagrams where necessary.***
3) ***Figures to the right indicate full marks.***
4) ***Assume suitable data if necessary.***

Q1) a) What are various Testing principle? **[6]**

b) What is configuration Testing? Explain its objectives. **[4]**

OR

Q2) a) What is 6-sigma? Explain its methodologies? **[6]**

b) Explain different types of testing techniques. **[4]**

Q3) a) Discuss Defect removal Techniques. **[5]**

b) Explain role of process in software quality. **[5]**

OR

Q4) a) Write short note on FMEA. **[5]**

b) What is Test Automation? Explain scope of Automation. **[5]**

Q5) a) Explain planning for software quality Assurance w.r.t. your final year project. **[8]**

b) Explain product and process quality with an example. **[8]**

OR

Q6) a) Explain Software process models in detail. **[8]**

b) Explain various componeats of the software quality assurance system. **[8]**

P.T.O.

Q7) a) Explain 7 Quality management Principles of ISO 9000 sereis in detail. **[8]**

b) Explain malcom Baldrige Model? **[8]**

OR

Q8) a) Draw and explain CMMI levels. **[8]**

b) What is TMM? Explain various levels & benefits of TMM. **[8]**

Q9) a) Explain case Tools. Also explain their effect on software Quality. **[8]**

b) Write short note on:- **[10]**

i) OO Methodology

ii) Walkthrough

OR

Q10)a) Explain the process of Defect injection and prevention. **[10]**

b) Consider online Banking system, state and inject 5 defects in the system which will cause flow in the system and suggest it's preventive measures. **[8]**

Total No. of Questions : 10]

SEAT No. : ____

P9326

[Total No. of Pages : 2

[6181]-561

B.E. (Information Technology)
DISTIBUTED COMPUTING SYSTEM
(2015 Pattern) (Semester-II) (414462)

Time : 2½ Hours] ***[Max. Marks : 70***

Instructions to the candidates:

1) ***Answer Q1 or Q2, Q3 or Q4, Q5 or Q6. Q7 or Q8, Q9 or Q10.***
2) ***Figures to the right indicate full makrs.***
3) ***Neat diagram must be drawn wherever ncessary.***
4) ***Assume suitable data; if necessary.***

Q1) a) Discuss various RPC semantics in case of system failures. **[6]**

b) Rephrase the meaning of hetrogenity in distributed system and also show how it is overcome. **[4]**

OR

Q2) a) Discuss RMI implementation and its significance in distributed systems. **[6]**

b) Differentiate between the working primitives MPI bsend and MPI isend in MPI. **[4]**

Q3) a) Compute lamport's clocks logical event ordering for the following scenaria. **[6]**

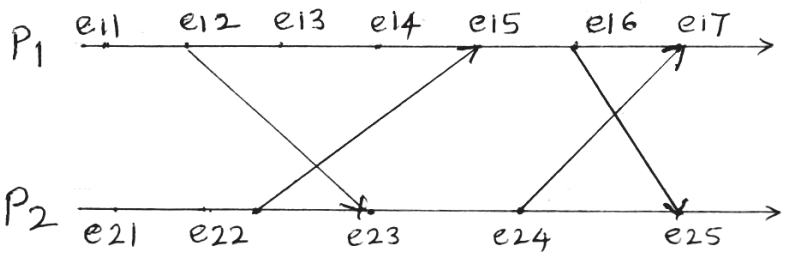

b) Explain in detail centralized mutual exclusion with example. **[4]**

OR

Q4) a) In a distributed system there are 5 live process having process Ids 501, 503, 504, 506, and 510. Sketch the coordinator election process showing message exchanged by the processes. using bully algorithm if process 504 starts election process. **[6]**

b) State and explain any one primary based consistency protocol. **[4]**

P.T.O.

Q5) a) list and explain the design goals of the sun NFS. **[8]**

b) Illustrate the concept of naming services and DNS in distributed. system. **[8]**

OR

Q6) a) Illustrate with an example how the bit torrent is designed to provide support for downloading video files. **[8]**

b) Describe how the resources are managed to achieve QOS for an application in a distributed multimedia system. **[8]**

Q7) a) Why web services are used? Explain SOAP and REST based web services in a nutshell. **[8]**

b) Discuss the structure of request and response massages of HTTP for communication between a client and server. **[8]**

OR

Q8) a) Discuss the role of Apache web server in distributed web based system. **[8]**

b) Give the disadvantage of using Hierarchical caches for a web prorcy How can it be overcome through cooperative caching? **[8]**

Q9) a) Elaborate on the various security mechanisms in distributed systems. **[9]**

b) Describe the Authentication process to log into a distributed system which uses kerberos to set up a secure channel. **[9]**

OR

Q10)a) With suitable diagram explain common implementation of firewall. **[9]**

b) Explain the secure mobile code in brief with reference to Java Sandbox. **[9]**



Total No. of Questions : 10]

SEAT No. :

P-9327

[Total No. of Pages : 2

[6181]-562

B.E. (Information Technology)

UBIQUITOUS COMPUTING

(2015 Pattern) (Semester - II) (414463)

Time : 2½ Hours] *[Max. Marks : 70*

Instructions to the candidates:

1) ***Answer Q1 or Q2, Q3 or Q4, Q5 or Q6, Q7 or Q8, Q9 or Q10.***
2) ***Neat diagrams must be drawn wherever necessary.***
3) ***Figures to the right indicate full marks.***
4) ***Assume suitable data, if necessary.***

Q1) a) Outline five core properties that characterize UbiCom System. **[5]**

b) What is Transparency and Openness? Are they complementary to each other? **[5]**

OR

Q2) a) List and explain three main types of environment context? **[5]**

b) Explain smart devices under CPI and CCI. **[5]**

Q3) a) Explain three major types of robot. **[5]**

b) Explain RFID tags and its types. **[5]**

OR

Q4) a) Explain life cycle for tagging physical objects. **[5]**

b) Explain in details service provision life cycle. **[5]**

Q5) a) Write short note on : **[8]**

i) Gesture Interface

ii) Tangible Interface

b) Explain Human-Centered Design(HCD) with help of neat diagram. **[8]**

OR

P.T.O.

Q6) a) List all handling limited key input and explain it in details. **[8]**

b) Describe user models and its acquisition and representation. **[8]**

Q7) a) Describe all challenges to privacy for ubiquitous computing. **[8]**

b) What is Ubiquitous computing privacy? Explain Interpersonal privacy. **[8]**

OR

Q8) a) Explain different types of challenges and privacy difficulties of RFID tags. **[8]**

b) Explain Solove's taxonomy of privacy with diagram. **[8]**

Q9) a) Write short note on : **[12]**

i) PSTN voice network

ii) Routing and inter-networking

iii) Network protocol suits

b) What are different network design issues? Explain any two in details? **[6]**

OR

Q10) a) Write a short note on : **[12]**

i) Personal Area Network

ii) Body Area Network

b) Describe wireless data network with its types. **[6]**

⌘⌘⌘

Total No. of Questions : 10]

SEAT No. :

P9328

[Total No. of Pages : 2

[6181]-563
B.E. (IT)
INTERNET OF THINGS
(2015 Pattern) (Semester - II) (414464 A) (Elective - III)

Time : 2½ Hours] *[Max. Marks : 70*

Instructions to the candidates:

1) ***Answer questions Q.1 or Q.2, Q.3 or Q.4, Q.5 or Q.6, Q.7 or Q.8, Q.9 or Q.10.***
2) ***Neat diagrams must be drawn wherever necessary.***
3) ***Figures to the right indicate full marks.***
4) ***Assume suitable data if necessary.***

Q1) a) Define IOT and explain logical design of IOT. **[5]**

b) Explain IOT Levels and Deployment templates in detail. **[5]**

OR

Q2) a) Define IOT and explain application of IOT. **[5]**

b) Explain enabling technologies in IOT. **[5]**

Q3) a) Explain the term Smart Objects in IOT. **[5]**

b) Write a short note on : Network function virtualization. **[5]**

OR

Q4) a) Explain in Brief IEEE 802.15.4. **[5]**

b) Write the differences between Fog Computing and Edge Computing. **[5]**

Q5) a) Explain IEEE 802.15.4g and 4e access technology. **[8]**

b) Which are the Different Sensors Used In IOT. Explain in Brief. **[8]**

OR

Q6) a) What is LoRaWAN. Explain in Brief. **[8]**

b) Write the differences between IPV6 and IPV4. **[8]**

P.T.O.

Q7) a) Explain IPsec in IPv6. **[8]**

b) Explain Python Web Application Framework - Django. **[8]**

OR

Q8) a) Explain IPv6 over low-power WPAN (6LoWPAN). **[8]**

b) What is IPv6 Tunneling. **[8]**

Q9) a) Explain AMAZON web services for IOT. **[8]**

b) Explain IOT case Study Home Automation in Brief. **[10]**

OR

Q10)a) What is cloud storage models in IOT. Explain in Brief. **[8]**

b) Describe WAMP-AutoBahn for IOT. **[10]**

Total No. of Questions : 10]

SEAT No. :

P9329

[Total No. of Pages : 2

[6181]-564
B.E. (Information Technology)
INFORMATION STORAGE AND RETRIEVAL
(2015 Pattern) (Semester - II) (Elective - III) (414464 B)

Time : 2½ Hours] *[Max. Marks : 70*

Instructions to the candidates:

1) ***Answer Q.1 or Q.2, Q.3 or Q.4, Q.5 or Q.6, Q.7 or Q.8, Q.9 or Q.10.***
2) ***Neat diagrams must be drawn wherever necessary.***
3) ***Figures to the right indicate full marks.***
4) ***Assume suitable data, if necessary and mention it clearly.***

Q1) a) Explain steps in conflation algorithm using a suitable example. **[6]**

b) Draw and Explain IR system block diagram. **[4]**

OR

Q2) a) Differentiate between data retrieval and information retrieval. **[6]**

b) List with definition different measures of association. **[4]**

Q3) a) Compare Neural network-based retrieval and Fuzzy set retrieval methods. **[6]**

b) Define and Explain following terms. **[4]**

i) MRR

ii) NDCG

OR

Q4) a) Explain the terms Harmonic mean, E measure, R precision, Precision histogram. **[5]**

b) Explain basic concept for Information Retrieval. Draw IR system block diagram. **[5]**

Q5) a) Describe the architecture of distributed IR. **[9]**

b) What do you understand by multimedia query language? Explain various query predictors. **[9]**

OR

P.T.O.

Q6) a) Describe multimedia data support in commercial DBMS. **[9]**

b) Describe the architecture of distributed IR. **[9]**

Q7) a) Discuss the challenges involve in web search engine. **[8]**

b) What is Web crawling? Explain the techniques used by Web crawlers to crawl the web. **[8]**

OR

Q8) a) Explain centralized and distributed architecture of a search engine. **[8]**

b) What is page ranking? Explain with example how to calculate page rank of web page. **[8]**

Q9) a) What is collaborative filtering? Discuss its advantages and disadvantages. **[8]**

b) Explain the methods for extracting data from text. **[8]**

OR

Q10)a) Define Recommender system? Explain in brief collaborative filtering.**[8]**

b) Explain semantic web in detail. **[8]**

Total No. of Questions : 10]

SEAT No. :

P9330

[Total No. of Pages : 2

[6181]-565
B.E. (Information Technology)
SOCIAL MEDIA ANALYTICS
(2015 Pattern) (Semester - II) (Elective - IV) (414465 D)

Time : 2½ Hours] *[Max. Marks : 70*

Instructions to the candidates:

1) ***Answer the questions Q.1 or Q.2, Q.3 or Q.4, Q.5 or Q.6 Q.7 or Q.8, Q.9 or Q.10.***
2) ***Figures to the right indicate full marks.***
3) ***Neat diagrams must be drawn wherever necessary.***
4) ***Use of Electronic calculator is allowed.***
5) ***Assume suitable data, if necessary.***

Q1) a) What is public and private data in Social media? Give example. **[5]**

b) Write a short note on Ontology based Visualization. **[5]**

OR

Q2) a) Explain different method of Data Gathering in Social Media. **[5]**

b) Explain hierarchical clustering algorithm with single linkage clustering. **[5]**

Q3) a) What do you mean by Sampling for Social Networks data? What is the need for sampling? **[5]**

b) Write about different social media platforms. **[5]**

OR

Q4) a) Which are the major methods used for data mining in social networks? **[5]**

b) Write a note on text mining in social networks. **[5]**

Q5) a) What is Centrality? Explain Degree Centrality and Katz Centrality with examples. **[8]**

b) Explain Transitivity and Reciprocity with equations. **[8]**

OR

Q6) a) How Similarity between two nodes can be computed using Structural Equivalence? **[8]**

b) Explain Balance and Status theory using proper examples. **[8]**

P.T.O.

Q7) a) Write major components of Behavior Analysis Methodology. **[8]**

b) Explain Collective Behavior Prediction using sample example. **[8]**

OR

Q8) a) What are the Node Neighborhood-Based methods? **[8]**

b) Explain how User Migration can be used in Collective Behavior Analysis. **[8]**

Q9) a) How would you define Twitter? Explain with different services. **[9]**

b) Explore Facebook's Social Graph API. **[9]**

OR

Q10)a) Write a note on Mining Twitteer. **[9]**

b) Explain Facebook with analyzing social graph conections. **[9]**



Total No. of Questions : 10]

SEAT No. : ____

P-9331

[Total No. of Pages : 2

[6181]-566

B.E. (Instrumentation & Control)

PROCESS INSTRUMENTATION

(2015 Pattern) (Semester - II) (406268)

Time : 2½ Hours] ***[Max. Marks : 70***

Instructions to the candidates:

1) ***Answer Q1 or Q2, Q3 or Q4, Q5 or Q6, Q7 or Q8, Q9 or Q10.***
2) ***Neat diagrams must be drawn wherever necessary.***
3) ***Figures to the right side indicate full marks.***
4) ***Assume Suitable data if necessary***
5) ***Use of calculator is allowed***

Q1) Develop cascade control strategy for composition control of bottoms product. **[10]**

OR

Q2) Explain with neat sketch dynamics of second order system. **[10]**

Q3) Explain in brief air and fuel ratio control in boilers. **[10]**

OR

Q4) Develop cascade strategy for Heat Exchanger. Comment on tuning of cascade control. **[10]**

Q5) a) Explain in brief batch recipe management. **[8]**

b) Explain in brief bottoms composition control in reactors. **[8]**

OR

Q6) Explain in brief : **[16]**

a) Inferential control

b) End point detection control.

P.T.O.

Q7) Explain with neat sketch reflux control and column pressure control in distillation column. **[16]**

OR

Q8) Explain in brief w.r.t distillation column : **[16]**

a) Safety interlocks

b) Mass and energy balance

Q9) a) Explain with neat sketch Multi compressor control. **[8]**

b) Explain with neat sketch anti-surge control. **[10]**

OR

Q10)a) Discuss in brief pump control. **[10]**

b) Explain in brief override control of compressors. **[8]**

Total No. of Questions : 10]

SEAT No. :

P-9332

[Total No. of Pages : 2

[6181]-567

B.E. (Instrumentation & Control)

INDUSTRIAL AUTOMATION

(2015 Pattern) (Semester - II) (406269)

Time : 2½ Hours] ***[Max. Marks : 70***

Instructions to the candidates:

1) ***Answer Q1 or Q2, Q3 or Q4, Q5 or Q6, Q7 or Q8, Q9 or Q10.***
2) ***Neat diagrams must be drawn wherever necessary.***
3) ***Figures to the right side indicate full marks.***
4) ***Assume Suitable data if necessary.***

Q1) a) Discuss the various tools used in industrial automation. **[6]**

b) Differentiate between HART and Fieldbus protocol. **[4]**

OR

Q2) a) Explain the MODBUS in detail. **[6]**

b) Classify the different types of industries. **[4]**

Q3) a) Explain the Foundation field bus protocol with reference to OSI model. **[6]**

b) Explain the Counter instruction of PLC in detail. **[4]**

OR

Q4) a) Enlist the different PLC Programming language. Explain Timer instruction in detail. **[6]**

b) Write the OLE for process control. **[4]**

Q5) a) Explain the role of PLC in a SCADA system. **[8]**

b) Write a short note on SCADA? Enlist various topologies of SCADA? **[8]**

OR

P.T.O.

Q6) a) Explain any one application of SCADA system in detail. **[8]**

b) Describe the role of RTU in SCADA system in detail. **[8]**

Q7) a) Explain database management levels with its functions in DCS system. **[10]**

b) Describe control techniques in DCS. **[8]**

OR

Q8) a) Explain the hierarchical structure of DCS in detail. **[10]**

b) Explain in brief alarm management system used in DCS. **[8]**

Q9) a) With the help of block diagram explain "ESD Systems". **[8]**

b) Comment on Hazard & risk. What are IEC 61511 standards for functional safety. **[8]**

OR

Q10)a) With neat diagram, explain the concept of Safety Integrity level. **[8]**

b) Explain the importance of Process Hazard Analysis (PHA) & Hazard and operability study (HaZOP)? **[8]**

Total No. of Questions : 10]

SEAT No. : ____

P-9333

[Total No. of Pages : 2

[6181]-568
B.E. (Instrumentation & Control)
BUILDING AUTOMATION
(2015 Pattern) (Semester - II) (406270A) (Elective-III)

Time : 2½ Hours] ***[Max. Marks : 70***

Instructions to the candidates :

1) ***Answer Q1 or Q2, Q3 or Q4, Q5 or Q6, Q7or Q8, Q9 or Q10.***
2) ***Neat diagrams must be drawn, wherever necessary.***
3) ***Figures to the right indicate full marks.***
4) ***Assume suitable data if necessary.***

Q1) a) What is BAS? Explain the importance of FAS in system with neat sketch. **[5]**

b) Explain the role of plate type heat exchanger in HVAC system with neat sketch. **[5]**

OR

Q2) a) Write short note on intelligent building. **[5]**

b) List out the applications of AHU. Explain any one in detail. **[5]**

Q3) a) What is open protocols? Write short note on any one of following. **[5]**

i) Profibus ii) Modbus

b) What do you mean by comfort parameters for human. How they are measured in BAS systems. **[5]**

OR

Q4) a) Explain with neat diagram & working principle of thermister. **[5]**

b) Explain the working principle with neat diagram of BTU meter. **[5]**

Q5) a) Explain working principle of condenser in refrigeration cycle. **[8]**

b) Explain series chiller system with neat dia. **[8]**

OR

P.T.O.

Q6) a) Enlist different types of boilers. Explain any one in detail. **[8]**

b) Explain 7 element control in boiler control. **[8]**

Q7) a) Explain the concept of free cooling in chilled water system. **[8]**

b) Explain the concept & working of heat pumps. **[10]**

OR

Q8) a) What is fire Alarm system. Explain with neat dia. **[8]**

b) What is the importance of battery calculation? & its requirement in design. **[10]**

Q9) a) What is Access control? Enlist its components. **[8]**

b) Explain secure & Nonsecure concept in BAS. **[8]**

OR

Q10)a) Enlist the types of cameras in CCTV. Explain any one in detail. **[8]**

b) Explain CCTV Architecture in detail. **[8]**

Total No. of Questions : 10]

SEAT No. :

P9334

[Total No. of Pages : 2

[6181]-569
B.E. (Instrumentation & Control)
RENEWABLE ENERGY SYSTEM
(2015 Pattern) (Semester - II) (406271 B) (Elective - IV)

Time : 2½ Hours] *[Max. Marks : 70*

Instructions to the candidates:

1) ***Answer Q.1 or Q.2, Q.3 or Q.4, Q.5 or Q.6 Q.7 or Q.8, Q.9 or Q.10.***
2) ***Neat diagrams must be drawn wherever necessary.***
3) ***Figures to the right indicate full marks.***
4) ***Assume suitable data, if necessary.***

Q1) a) Elaborate on the working of geothermal renewable system with diagram. **[6]**

b) Compare solar and wind Renewable energy system. **[4]**

OR

Q2) a) Explain the working of Solar photo voltaic cell with diagram. **[6]**

b) List the various parameters of battery. Define the following terms related to the battery: Depth of Discharge, Life cycle. **[4]**

Q3) a) Draw and explain the working of super capacitor. **[6]**

b) Define the following terms related to Photo voltaic cell **[4]**

i) Current at maximum power point

ii) Voltage at maximum power point.

Draw I - V curve of Solar cell.

OR

Q4) a) Explain the working of Fuel cell wtih neat diagram. **[6]**

b) Sate the specification & selection criteria of Ni-MH battery. **[4]**

Q5) a) State the role of Power Converters in Solar Photo voltaic system. Explain the working of power converters in solar photo voltaic system with neat diagram. **[10]**

b) Draw and explain the working of Isolated Solar Photo voltaic system.**[8]**

OR

P.T.O.

Q6) a) Compare Isolated and Non Isolated Solar Photo voltaic system. Explain the working of Non-Isolated Solar Photo voltaic system with neat diagram. **[10]**

b) Elaborate the concept of Energy monitoring and metering system with neat diagram. **[8]**

Q7) a) Draw and explain the working of Solar water heater with neat diagram. **[8]**

b) Explain the working of Solar cooker with neat diagram. **[8]**

OR

Q8) a) With the help of block diagram, Explain the working of Solar water pump. **[8]**

b) Draw and explain the working of Solar street lamp system. **[8]**

Q9) a) Explain the wind energy site selection technique. **[8]**

b) Elaborate on the various models wind pattern **[8]**

OR

Q10) a) Draw and explain the working of wind plus diesel energy system. **[8]**

b) Elaborate on the concept of Wind farm with block/ neat diagram. **[8]**

Total No. of Questions : 10]

SEAT No. :

P-9335

[Total No. of Pages : 2

[6181]-570

B.E. (Instrumentation and Control)

INSTRUMENTATION IN AGRICULTURE AND FOOD INDUSTRIES

(2015 Pattern) (Semester - II) (406271C) (Elective - IV)

Time : 2½ Hours] *[Max. Marks : 70*

Instructions to the candidates:

1) ***Answer Q1 or Q2, Q3 or Q4, Q5 or Q6, Q7 or Q8, Q9 or Q10.***
2) ***Neat diagrams must be drawn wherever necessary.***
3) ***Figures to the right side indicate full marks.***
4) ***Use of calculator is allowed.***
5) ***Assume suitable data if necessary.***

Q1) a) Enlist and Describe any four applications of Instrumentation and Control systems in the Agricultural field? Draw suitable diagrams for them? **[5]**

b) Draw process flow diagram of a typical Sugar Industry. Enlist the process parameters which are measured there. **[5]**

OR

Q2) a) Which soil moisture measurement sensors or transducers are available in the market? Name any two? List the names of two sensors for soil temperature measurement. Draw suitable diagrams of them and label them. **[5]**

b) Represent a process flow diagram for the milk processing plant. Explain any two instruments used in the plant along with its applications. **[5]**

Q3) a) Draw and describe the center pivot method of irrigation. Draw a diagram of it and give its merit? Whether it is useful in India. **[5]**

b) How a soil moisture measurement is carried by gypsum block method? Explain with suitable drawing. **[5]**

OR

Q4) a) Narrate the working procedure of the micro irrigation system. Give any two advantages and disadvantages of it. **[5]**

b) What is the meaning of Green Houses? Propose a typical instrumentation system to Green Houses. Draw the relative diagram. **[5]**

P.T.O.

Q5) a) Suggest automation of the earth moving equipment. Enlist the advantages and disadvantages of it over the conventional equipment/ method. **[8]**

b) Write the working principle of Time-Domain Refractometry (TDR) used for the soil water measurement. **[8]**

OR

Q6) a) List out the different pumps available in the market. Explain the construction, principle and working of the centrifugal pump. Draw its diagrams. **[8]**

b) Write the names of the Agro-metrological instruments. Describe with proper diagram working of rain gauge. **[8]**

Q7) a) Explain the word "Food Processing", List few examples. Describe the, how food quality is measured in the industry. **[9]**

b) What is mean by "Agmark"? How it is useful for farmers? Give its application. **[9]**

OR

Q8) a) Describe the Indian Standards and Codex standards. How they are useful? **[9]**

b) Give the design procedure for a cold storage of medium size. Enlist the designing steps. Draw a typical diagram of it. **[9]**

Q9) a) How a SCADA system is designed and developed for a typical food processing industry? **[8]**

b) What is the procedure for obtaining and maintaining a controlled environment in the food industry? Write the steps. **[8]**

OR

Q10)a) PLC is to be used in the food processing industry for automation. How it is to be configured? Give one example with steps. **[8]**

b) Enlist the new trends used in the modern food processing industry. **[8]**



Total No. of Questions : 10]

SEAT No. :

P-9336

[Total No. of Pages : 3

[6181]-571
B.E. (Mechanical)
REFRIGERATION & AIR CONDITIONING
(2015 Course) (Semester - I) (302049)

Time : 2½ Hours] *[Max. Marks : 70*

Instructions to the candidates :

1) ***Answer Q.1 or Q.2, Q.3 or Q.4, Q.5 or Q.6, Q.7 or Q.8 and Q.9 or Q.10.***
2) ***Neat diagrams must be drawn wherever necessary.***
3) ***Figures to the right side indicate full marks.***
4) ***Use of electronic pocket calculator is allowed.***
5) ***Use of steam table and psychrometric chart is allowed.***

Q1) a) Explain with schematic refrigeration system for water cooler. **[6]**

b) Explain the Recovery, Recycling and Reclaiming of refrigerant. **[4]**

OR

Q2) a) A vapour compression refrigeration plant operates between evaporation and condensation temperatures of -10°C and 45°C respectively. The refrigerant is dry and saturated vapour at the entry to the compressor. It is discharged at 102°C from the compressor. The bore and stroke of the compressor are 80 mm each. It runs 720 rpm with a volumetric efficiency of 80%. The liquid refrigerant enters the expansion valve at 35°C. Determine : **[6]**

i) COP

ii) Mass flow rate of refrigerant

iii) Capacity of plant in TR.

Take specific heat of liquid refrigerant = 1.62 kJ/kgK.

Sat. Temp (°C)	Vg (m3/kg)	hf (kJ/kg)	hg (kJ/kg)	Sf (kJ/kg-k)	Sg (kJ/kg-k)
–10°C	0.233	45.4	460.7	0.183	1.762
45°C	0.046	133.0	488.6	0.485	1.587

b) Explain with neat diagram three fluid vapour absorption refrigeration system. **[4]**

P.T.O.

Q3) a) Explain Linde-Hampson cycle with neat diagram. Give its applications. **[6]**

b) What is Cryogenics? Give any four applications of cryogenics. **[4]**

OR

Q4) A system working with ammonia as refrigerant is shown in fig Assuming saturated conditions at the exit of evaporators and condenser, ammonia vapour to behave as an ideal gas with a gas constant of 0.4882 kJ/kg. K and isentropic index (Cp/Cv) of 1.29 and isentropic compression **[10]**

a) Find the required power input to compressor in kW

b) Find the required power input if instead of using a single compressor, individual compressors are used for low and high temperature evaporators.

Use properties from table given below.

T, °C	Psat (kPa)	hf(kJ/kg)(sat. liquid)	hg(kJ/kg)(sat. vapour)
–34.4	95.98	44.0	1417
–6.7	331.8	169.1	1455
27.7	1080.0	330.4	1485

Q5) a) An air conditioning plant is required to supply 60 m of air per minute at a DBT of 21°C and 55% RH. The outside air is at DBT of 28°C and 60% RH. Determine the mass of water drained and capacity of the cooling coil. Assume the air conditioning plant first to dehumidify and then to cool the air. **[8]**

b) Explain Specific humidity, Relative humidity. **[8]**

OR

Q6) a) Write a short note on Thermodynamics of human body and Human comfort chart. **[8]**

b) What is Infiltration Load and Ventilation load. **[8]**

Q7) a) Write a note on All Year Air Conditioning system with neat sketch. **[6]**

b) Draw neat diagram of TXV and explain its working. **[6]**

c) Write a note on Hermetically Sealed compressor. **[6]**

OR

Q8) a) Classify air conditioning systems. Compare all air-air conditioning system with all water air conditioning system. **[8]**

b) What are the different types of evaporators used in refrigeration and air conditioning plant? With neat sketch explain working of flooded evaporator. **[8]**

c) Explain the use of Receiver and Filter/dryer in vapour compression system. **[2]**

Q9) a) Write down the methods of duct design? Explain static regain method in detail. **[6]**

b) A rectangular duct 0.15 m and 0. 12m is 20m long and carries standard air at the rate of 0.3 m^3/s. Find the total pressure required at the inlet to the duct in order to maintain this air power. f = 0.005,Take air density = 1.2 Kg/m^3. **[6]**

c) Write a note on Fan Law. **[4]**

OR

Q10) a) Explain Air Handling Unit (AHU) with neat sketch. **[6]**

b) A Circular duct of 40 cm is selected to carry air in an air conditioned space at a velocity of 440 m/min to keep the noise level at desired level. If this duct is replaced by a rectangular duct of aspect ratio of 1.5, find out the size of rectangular duct for equal friction method when

i) The velocity of air in two ducts is same

ii) The discharge rate of air in two ducts is same.

If f = 0.0015 find out the pressure loss per 100 m length of duct. Take density of air 1.15kg/m^3. **[6]**

c) Write a note on Duct Material. **[4]**

▽▽▽▽

Total No. of Questions : 8]

SEAT No. :

P-9337

[Total No. of Pages : 3

[6181]-572
B.E. (Mechanical Engineering)
HYDRAULICS AND PNEUMATICS
(2015 Pattern) (Semester - I) (402041)

Time : 2½ Hours] ***[Max. Marks : 70***

Instructions to the candidates :

1) ***Figures to the right side indicate full marks.***
2) ***Use of non-programmable scientific calculator is allowed.***
3) ***Assume data wherever necessary and mention it.***
4) ***Draw neat and suitable figure wherever necessary***
5) ***Answer Q.1 or Q.2, Q.3 or Q.4, Q.5 or Q.6, Q.7 or Q.8.***
6) ***Use of steam table is permitted.***

Q1) a) State the causes of pressure losses in fluid power system. **[4]**

b) Why cushioning is required? In which devices it is used? State methods of cushioning. Draw labeled diagram of any one method . **[8]**

c) Explain with circuit "application of Pressure Reducing valve". **[8]**

OR

Q2) a) Why filters are used? Why baffles are used in reservoirs? **[4]**

b) Draw a labeled diagram of balanced type vane pump and explain its working. **[8]**

c) Explain with circuit "application of unloading valve" **[8]**

Q3) a) Explain working of Sequencing circuit A-B-A+B+ using sequencing vaves **[8]**

b) Explain with circuit "application of Counterbalance valve" **[8]**

OR

Q4) a) Explain synchronization circuit for 3 cyclinders. State essential basic conditions for successful operation of such circuits. **[8]**

b) Explain with circuit "application of locking of linear actuators." **[8]**

P.T.O.

Q5) a) Explain with circuit "application of pneumatic shuttle valve." **[5]**

b) Explain with circuit "Pneumatic Press with safety measures". If a worker by mistake lifts his one hand while operating pneumatic press then the lift should move up. **[12]**

OR

Q6) a) Explain with circuit. "application of pneumatic twin pressure valve." **[5]**

b) Explain operation of "pneumatic time delay valve" with circuit **[12]**

Q7) Two identical cyclinders A & B are to be operated simultaneously. The cylinder A moves again a load of 25kN, while the cylinder B moves against a load of 20kN Both the cylinders have stroke of 1m the working stroke has to be completed in 20 seconds. The return stroke of cylinder B is to start only after the cylinder A is completely retracted.The return speeds are to be fast as possible. Draw a circuit which full fill these requirements select the different components you have used in the circuit from the given data. **[17]**

OR

Q8) A pneumatic circuit is to be designed for Clamping and Drilling application. Decide the sequence and sizes of the cylinders, Clamping force required in 1kN, Drilling force required is 500N. Operating pressure is 5 bar, Assume suitable data if any. Draw circuit with labels and explain its working. Do not use sequencing valve. **[17]**

(a) Suction strainer:

Model	Flow Capacity (lpm)
S_1	38
S_2	76
S_3	152

(b) Pressure gauge:

Model	Range (bar)
PG_1	0 – 25
PG_2	0 – 40
PG_3	0 – 100
PG_4	0 – 160

(c) Vane pump:

Model	Delivery in lpm		
	At 0 bar	At 35 bar	At 70 bar
P_1	8.5	7.1	5.3
P_2	12.9	11.4	9.5
P_3	17.6	16.1	14.3
P_4	25.1	23.8	22.4
P_5	39.0	37.5	35.6

(d) Relief valve:

Model	Flow capacity (lpm)	Max. working pressure & bar
R_1	11.4	70
R_2	19.0	210
R_3	30.4	70
R_4	57.0	105

(e) Flow control valve:

Model	Working pressure (bar)	Flow range (lpm)
F_1	70	0 - 4.1
F_2	105	0 - 4.9
F_3	105	0 - 16.3
F_4	70	0 - 24.6

(f) Directional control valve:

Model	Max. working pressure & bar	Flow capacity (lpm)
D_1	350	19
D_2	210	38
D_3	210	76

(g) Check valve:

Model	Max. working Pressure & bar	Flow capacity (/pm)
C_1	210	15.2
C_2	210	30.4
C_3	210	76

(h) Pilot operated check valve:

Model	Max. working Pressure (bar)	Flow capacity (lpm)
PO_1	210	19
PO_2	210	38
PO_3	210	76

(i) Cylinder (Max. working pressure 210 bar)

Model	Bore diameter (mm)	Rod diameter (mm)
A_1	25	12.5
A_2	40	16
A_3	50	35
A_4	75	45
A_5	100	50

(j) Oil reservoirs:

Model	Capacity (litres)
T_1	40
T_2	100
T_3	250
T_4	400
T_5	600



Total No. of Questions : 10]

SEAT No. :

P-9338

[Total No. of Pages : 4

[6181]-573

B.E. (Mechanical)

CAD/CAM & AUTOMATION

(2015 Pattern) (Semester - I) (402042)

Time : 2½ Hours] *[Max. Marks : 70*

Instructions to the candidates:

1) ***Answer Q1 or Q2, Q3 or Q4, Q5 or Q6, Q7 or Q8, Q9 or Q10.***
2) ***Figures to the right side indicate full marks.***
3) ***Neat diagrams must be drawn wherever necessary.***
4) ***Use of scientific calculator allowed.***
5) ***Assume suitable data, if necessary.***

Q1) a) With the help of neat sketch, explain various coordinate systems used in computer graphics. **[6]**

b) Write homogeneous transformation matrix for translation of triangle ABC through distance t_x and t_y in X and Y direction respectively, where A(x_1, y_1), B(x_2, y_2) and C(x_3, y_3). **[4]**

OR

Q2) The end points of line AB are A(1, 3, 5) and B(4, 5, 1) and line PQ are P(0, 4, –3) and Q(1, 7, 0). Determine :

a) Parametric equation of line AB & PQ **[4]**

b) The unit vectors of line AB & PQ **[2]**

c) Check, lines AB & PQ are parallel or not? **[2]**

d) Check, lines AB & PQ are perpendicular or not? **[2]**

Q3) a) Compare B-rep & CSG techniques in solid modeling. **[5]**

b) Derive element stiffness matrix for two noded 1D bar element. **[5]**

OR

P.T.O.

Q4) An axial stepped bar as shown in Figure 1, is axially loaded by force P = 50kN. Determine nodal displacement, reaction forces and stress in each element.

Assume : **[10]**

a) $E_1 = 200kN/mm^2$, $A_1 = 400mm^2$ and $L_1 = 250mm$

b) $E_2 = 150kN/mm^2$, $A_2 = 300mm^2$ and $L_2 = 250mm$

c) $E_3 = 200kN/mm^2$, $A_3 = 200mm^2$ and $L_3 = 250mm$

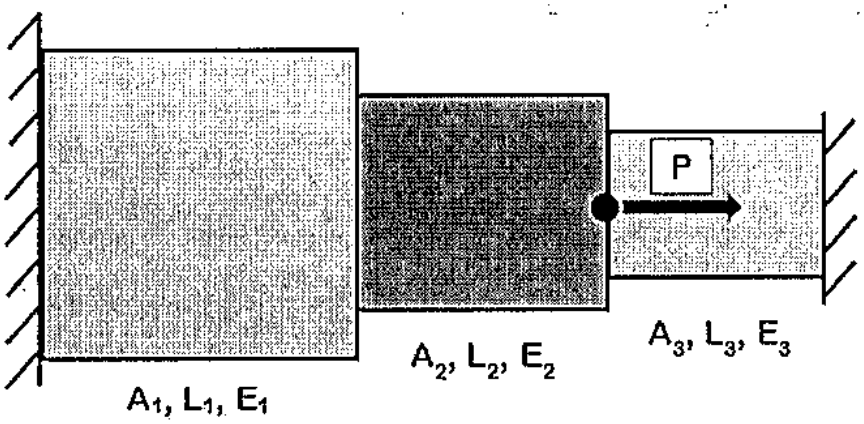

Figure 1. Q. 4

Q5) a) Explain Absolute & Incremental positioning in CNC machines. **[4]**

b) Write CNC part programming for machining slot with 8 mm diameter end milling cutter as shown in figure 2 in MS plate of 100mm × 100mm × 25mm thick plate. Assume suitable cutting data. **[12]**

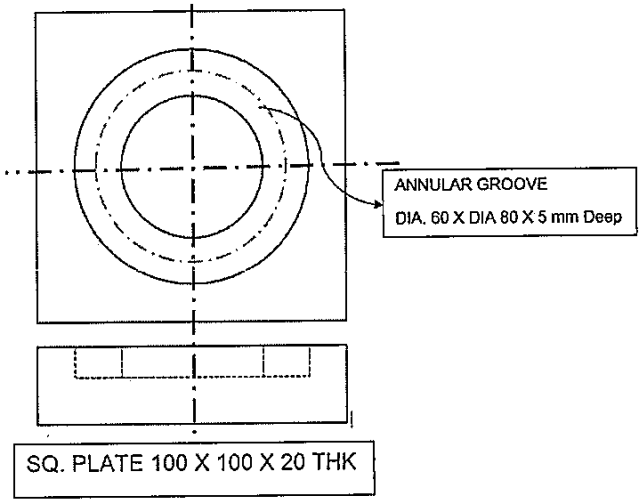

Figure 2. Q. 5(b)

OR

Q6) a) Write G-codes for Cutter Compensation with suitable sketch. **[4]**

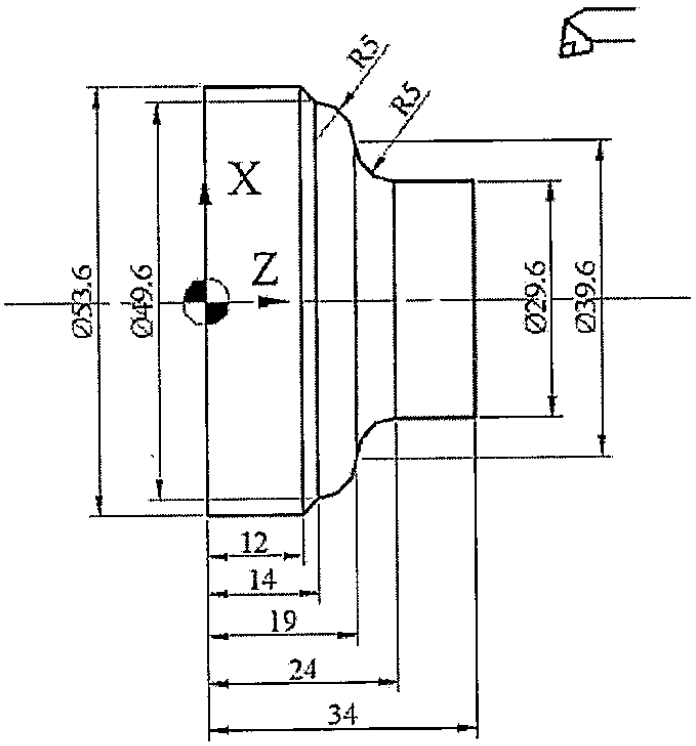

Figure 3. Q.6(a)

b) Write CNC part program for turned component as shown in figure 3 using canned cycles. Assume suitable cutting data. **[12]**

Q7) a) Explain Fused Deposition Modeling with the help of neat sketch. **[8]**

b) Discuss need and various components of Product Lifecycle Management (PLM) in detail. **[8]**

OR

Q8) a) Classify Rapid Prototyping based on working principle. Discuss merits and demerits of RP process. **[8]**

b) Discuss STL file format in detail. **[8]**

Q9) a) Discuss Automation in brief. Compare hard, soft and flexible automation with suitable examples. **[10]**

b) State RIA definition of robotics. State three laws of Robotics. **[8]**

OR

Q10) Write Short note on any three : **[18]**

a) Group Technology

b) AGV's

c) AS/RS systems

d) PTP Robot

e) Lead through programming

⌘⌘⌘

Total No. of Questions : 10]

SEAT No. :

P9339

[Total No. of Pages : 3

[6181] - 574

B.E. (Mechanical)

DYNAMICS OF MACHINERY

(2015 Pattern) (Semester - I) (402043)

Time : 2 ½ Hours] ***[Max. Marks : 70***

Instructions to the candidates:

1) ***Solve Q.1 or Q.2, Q.3 or Q.4, Q.5 or Q.6, Q.7 or Q.8, Q.9 or Q.10.***
2) ***Draw Neat diagrams wherever necessary.***
3) ***Use of scientific calculator is allowed.***
4) ***Assume suitable data where ever necessary.***
5) ***Figures to the right indicate full marks.***

Q1) a) Explain the following terms with respect to the free damped vibrations. **[4]**

i) Critical damping coefficient

ii) Damping factor

b) Explain frequency response curves for different damping conditions with significance. **[6]**

OR

Q2) a) Explain following terms: **[4]**

i) Zero frequency deflection

ii) Node point

b) An under damped shock absorber is to be designed for a motorcycle of mass 200 kg, such that during a road bump, the damped period of vibration is limited to 2 seconds and the amplitude of vibration should reduce to one-sixteenth in one cycle. Find the spring stiffness and damping coefficient of the shock absorber. **[6]**

Q3) a) Explain with neat diagram mathematical model of a motorbike. **[4]**

b) Explain following term. **[6]**

i) Vibration isolation

ii) Quality factor

iii) Magnification factor

OR

P.T.O.

Q4) A periodic torque having a maximum value of 0.65 Nm at a frequency corresponding to 5 rad/sec is impressed upon a flywheel suspended from a wire. The wheel has a moment of inertia of 0.15 kg.m^2 and a wire is having a diameter of 6 mm and a length of 1.2 m. The modulus of rigidity of the material is equal to 0.8×10^{11} N/m^2. A viscous dashpot applies damping couple of 0.693 Nm at an angular velocity of 1.5 rad/sec. Calculate: **[10]**

i) The maximum angular displacement from the rest position

ii) The maximum couple applied to dashpot

iii) The angle by which the angular displacement lags the torque.

Q5) a) Differentiate between static and dynamic balancing. Why there is a need of accurate dynamic balancing of high speed machines? **[6]**

b) Explain the method of direct and reverse cranks to determine the unbalance forces in radial engines with the help of neat diagrams. **[10]**

OR

Q6) a) Explain with neat diagram why single cylinder engine cannot be completely balanced. **[6]**

b) In a three cylinder radial engine, axes of cylinder are coplanar and angles between neighboring axes are 60°. All cylinders drive same crank of length 220 mm. Each connecting rod is 850 mm long. Reciprocating mass per cylinder is 1.5 kg and the engine runs at 1200 rpm. Find primary and secondary direct and reverse unbalance forces. **[10]**

Q7) a) Explain condition monitoring of machines. Explain different techniques for it. **[6]**

b) Explain the working of FFT Analyzer. **[6]**

c) It is required to measure the maximum acceleration of a machine, which vibrates violently with the frequency of 700 cycles per min. Accelerometer with negligible damping is attached to it and the indicator travels by 8.2 mm. If the accelerometer weighs 0.5 kg and has a spring rate of 17500 N/m, what is the maximum amplitude and maximum acceleration of the part? **[6]**

OR

Q8) a) What are the different methods of vibration control? Explain any one. **[6]**

b) Explain working of Magneto-Rheological dampers with neat sketch and application. **[6]**

c) A vibrometer has a natural frequency of 5 rad/sec and a damping factor of 0.2. An instrument is used to measure a vibrations of a body having a harmonic frequency of 45 rad/sec. The difference between the maximum and minimum reading is 7 mm. Find the amplitude of motion of vibrating body. **[6]**

Q9) a) Explain in brief various sources of noise and how to control the same. **[6]**

b) Explain acoustic material & its characteristics. **[6]**

c) Show that if the sound power is doubled, then the sound power level increases by approximately 3 dB. **[4]**

OR

Q10) a) Explain following terms with respect to sound : - **[6]**

i) Anechoic chamber

ii) Reverberation chamber

b) State and explain various types of sound fields? **[6]**

c) Calculate the total noise, if there are 4 sources of noise having magnitudes 45 dB, 54 dB, 53 dB and 52 dB. What would be effect on total noise, if 45 dB noise is switched off? **[4]**

❄ ❄ ❄

Total No. of Questions : 10]

SEAT No. :

P-9340

[Total No. of Pages : 4

[6181]-575

B.E. (Mechanical Engineering)

FINITE ELEMENT ANALYSIS

(2015 Pattern) (Semester - I) (402044-A) (Elective - I)

Time : 2½ Hours] *[Max. Marks : 70*

Instructions to the candidates:

1) ***Answer Q1 or Q2, Q3 or Q4, Q5 or Q6, Q7 or Q8, Q9 or Q10.***
2) ***Figures to the right side indicate full marks.***

Q1) a) Write general steps of finite element analysis. **[6]**

b) Derive stiffness matrix for two noded bar element. **[4]**

OR

Q2) For a truss shown in figure. Determine the displacement of nodes and stresses in members. Cross-section area of all members is 400 mm^2 and $E = 2 \times 10^5 MPa$. Determine **[10]**

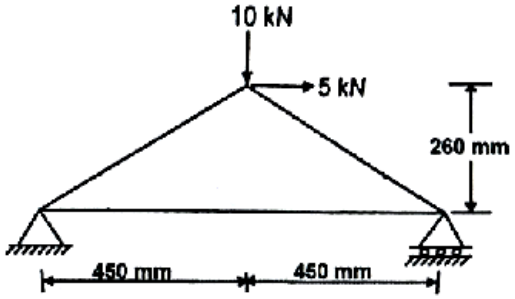

Q3) a) Figure shows one dimensional step bar fixed at each end subjected to load P_1 and P_2. Determine nodal displacement at each element. E=200 GPa, P_1=50 kN, P_2=20 kN. **[6]**

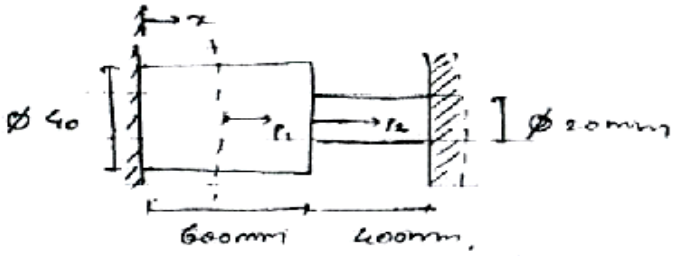

b) Explain in brief types of elements used in FEM along with their characteristics. **[4]**

P.T.O.

OR

Q4) a) In a triangular element, the nodes 1, 2 and 3 have cartesian coordinates: (30, 40), (140, 70) and (80,140) respectively. The point P within the element has cartesian coordinates (77, 96). For point P, determine (i) the natural coordinates and (ii) shape functions. **[6]**

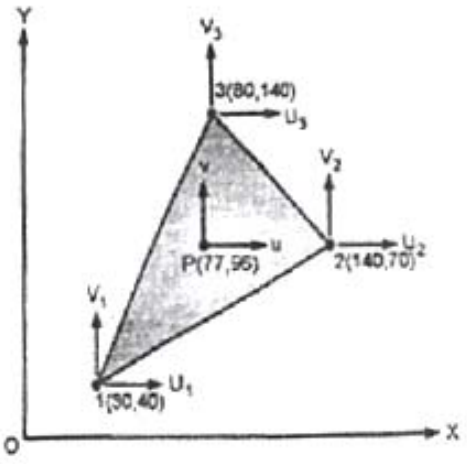

b) Explain plane stress formulation and its importance. **[4]**

Q5) a) Derive Jacobian matrix for three noded triangular (CST) element. **[8]**

b) A four noded rectangular element is shown in fig. Take $\zeta = 0$ and $\eta = 0$. Determine **[8]**

i) Jacobian matrix

ii) Strain displacement matrix

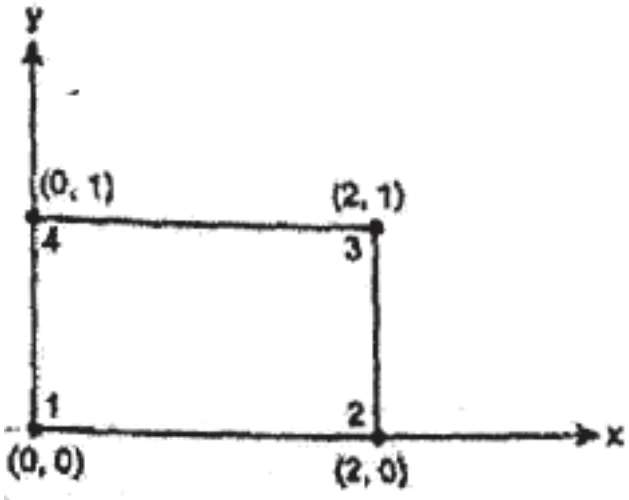

OR

Q6) a) Explain the terms isoparametric, subparametric and superparametric elements. **[8]**

b) Evaluate $I=\left(\int_{y=-2}^{y=2}\int_{x=-1}^{x=1}(x^2+2xy+y^2)\,dxdy\right)$ using Gauss quadrature method. **[8]**

Q7) a) Write down governing of steady-state heat transfer. Also write elemental stiffness matrix and compare it with bar element. **[8]**

b) The brick wall has a thickness of 0.6 m and K=0.8 W/m°K. The inner surface is at 28°C and the outer surface is exposed to cold air at –10°C. The heat transfer coefficient associated with the outside surface is 40 W/m°K. Determine the steady-state temperature distribution within the wall and also the heat flux through the wall using two elements. **[10]**

OR

Q8) a) Write short note on heat transfer through fin-pin.Explain with appropriate governing equation. **[8]**

b) Find the temperature distribution in the one-dimensional rod as shown in figure. **[10]**

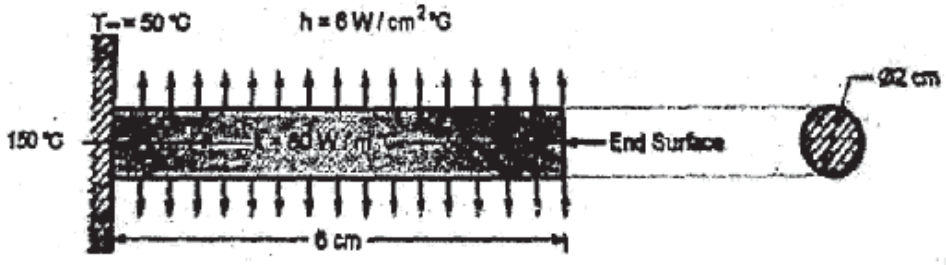

Q9) a) Write down consistent and lumped mass matrices for following elements. **[6]**

i) Bar element

ii) Plane truss element

iii) Beam element

b) Estimate the natural frequencies of axial vibrations of bar shown in figure using lumped mass matrix. The bar is having uniform cross-section with cross-sectional area $A = 50 \times 10^{-6}$ m^2. Length L = 1 m. modulus of elasticity $E = 2 \times 10^{11} N/m^2$ and density $\rho = 7800 kg/m^3$. Model the bar by using two elements. **[10]**

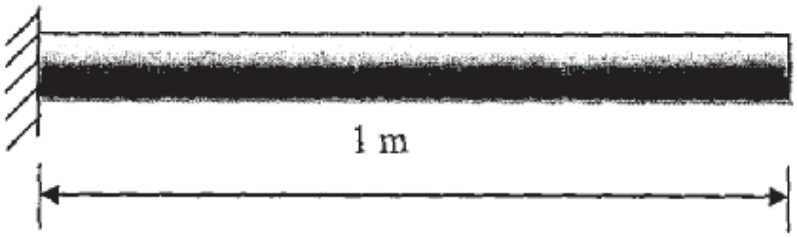

OR

Q10)a) Explain difference between consistent and lumped mass matrix technique for modal analysis of structure. **[6]**

b) Find the natural frequencies of longitudinal vibration of stepped shaft using consistent mass matrix having cross sectional areas $A_1 = 2500 mm^2$ and $A_2 = 1200$ mm^2. The shaft is constrained at one end as shown in figure. **[10]**

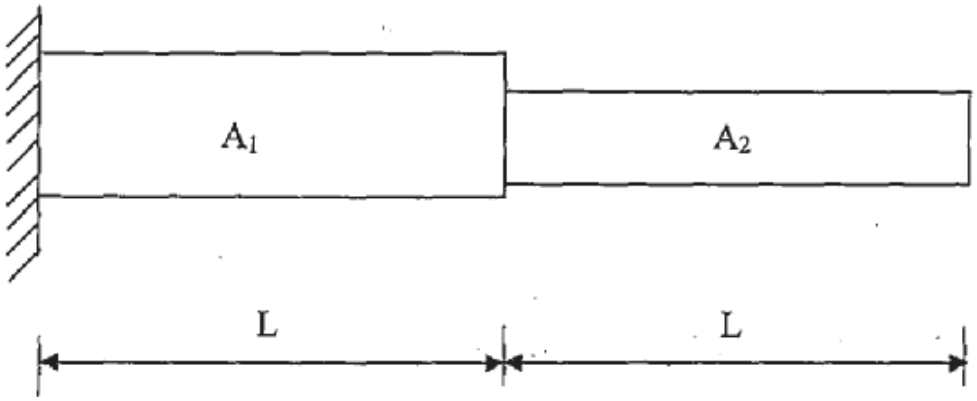

Total No. of Questions : 10]

SEAT No. :

P-9341

[Total No. of Pages : 2

[6181]-576

B.E. (Mechanical)

HEATING, VENTILATION & AIR CONDITIONING AND REFRIGERATION ENGINEERING

(2015 Pattern) (Semester - I) (402044C) (Elective - I)

Time : 2½ Hours] *[Max. Marks : 70*

Instructions to the candidates:

1) ***Solve Q1 or Q2, Q3 or Q4, Q5 or Q6, Q7 or Q8, Q9 or Q10.***
2) ***Assume suitable data wherever necessary. Use of refrigeration table is permitted.***
3) ***Use of non-programmable pocket calculator is allowed.***
4) ***Draw neat diagrams wherever necessary.***
5) ***Figures to the right indicate full marks.***

Q1) a) Explain working of Ejector with neat sketch. Write advantages of ejector? **[3]**

b) Classify, cooling tower and explain hyperbolic cooling tower with neat sketch. **[7]**

OR

Q2) a) Explain Critical Point and represent it on phase diagram for CO_2. **[3]**

b) What do you mean by Capacity Controls of reciprocating compressors? **[7]**

Q3) a) Write significance of characteristic curves of compressors. **[3]**

b) Write short notes on Refrigerant Piping. **[7]**

OR

Q4) a) Explain with neat sketch, working of Evaporative Condensers. **[5]**

b) Explain the sizing process of suction line in refrigeration system. **[5]**

P.T.O.

Q5) a) Write short notes on Indoor Air Quality. **[8]**

b) Write a short note on decrement factor & time lag. **[8]**

OR

Q6) a) Explain the causes of Indoor air pollution. **[8]**

b) Explain the Indoor design parameter of air conditioning system. **[8]**

Q7) a) Write a short note on components of cooling load. **[8]**

b) Explain the purpose of Energy Conservation Building Code (ECBC). **[8]**

OR

Q8) a) Define : **[10]**

i) Space Heat Gain,

ii) Space cooling load

iii) Space heat extraction rate

iv) Coil load 5. Sol air temperature.

b) What do you understand by space load characteristics? **[6]**

Q9) a) Explain with neat sketch Solid Desiccant Air-Conditioning. **[8]**

b) What are thermal storage cooling air conditioning systems? **[10]**

OR

Q10) a) What are Clean-Room Air Conditioning Systems? **[8]**

b) Explain with neat sketch evaporative cooling air conditioning systems. **[10]**

⌘⌘⌘

Total No. of Questions : 10]

SEAT No. : ____

P-9342

[Total No. of Pages : 2

[6181]-577
B.E. (Mechanical)
AUTOMOBILE ENGINEERING
(2015 Pattern) (Semester - I) (402045A) (Elective - II)

Time : 2½ Hours] ***[Max. Marks : 70***

Instructions to the candidates :

1) ***Solve Q.1 or Q.2, Q.3 or Q.4, Q.5 or Q.6, Q.7 or Q.8 and Q.9 or Q.10.***
2) ***Neat diagrams must draw wherever necessary.***
3) ***Figures to the right indicate full marks.***
4) ***Assume suitable data, if necessary.***

Q1) a) Write about vehicle specifications. **[5]**

b) Describe the necessity of gearbox in automobile. **[5]**

OR

Q2) a) Discuss various types of frames used in automotive construction. **[5]**

b) Explain the working principle and applications of a torque converter. **[5]**

Q3) a) Explain construction of wheel with net sketch. **[5]**

b) Describe the fundamental principles of a vehicle's steering mechanism. **[5]**

OR

Q4) a) Explain collapsible steering. **[5]**

b) What are the functions and objectives of suspension system? **[5]**

Q5) a) Explain the factors influencing the stability of vehicles. **[8]**

b) Discuss the impact of NVH on vehicle comfort and safety. **[8]**

OR

Q6) a) Define and explain the key parameters used to evaluate vehicle performance. **[8]**

b) Describe the role of active safety and passive safety in automobile with suitable example. **[8]**

P.T.O.

Q7) a) Describe various test on battery conditions. **[8]**

b) Identify and discuss the various resistances that a vehicle encounters during motion. **[8]**

OR

Q8) a) Discuss the importance of maintaining the suspension system. **[8]**

b) Explain the maintenance procedures for a vehicle's brake system. **[8]**

Q9) a) How can the transition to electric and hybrid vehicles benefit or challenge various sectors of the economy? **[6]**

b) Explore the factors influencing consumer adoption of EVs and HEVs.**[6]**

c) How do these vehicles contribute to reducing carbon emissions and environmental. **[6]**

OR

Q10) a) How do these vehicles contribute to reducing carbon emissions and environmental conservation? **[6]**

b) Discuss the importance of developing charging infrastructure for EVs and PHEVs. **[6]**

c) Explain the layout,construction, and working principles of electric vehicles. **[6]**

▽▽▽▽

Total No. of Questions : 10]

SEAT No. :

P-9343

[Total No. of Pages : 3

[6181]-578
B.E. (Mechanical)
ENERGY AUDIT AND MANAGEMENT
(2015 Pattern) (Semester - I) (402045C) (Elective-II)

Time : 2½ Hours] ***[Max. Marks : 70***

Instructions to the candidates :

1) ***Solve Q.1 or Q.2, Q.3 or Q.4, Q.5 or Q.6, Q.7 or Q.8, Q.9 or Q10.***
2) ***Draw neat diagrams wherever necessary.***
3) ***Figures to the right indicate full marks.***
4) ***Use of scientific calculator is allowed.***
5) ***Assume suitable data wherever necessary.***

Q1) a) Justify the relation of energy & environment. **[6]**

b) Explain in brief energy audit software. **[4]**

OR

Q2) a) Explain energy reforms in short. **[4]**

b) Explain energy audit methodology in details. **[6]**

Q3) a) A sum of Rs. 58,000/- is deposited in a bank at the beginning of a year. The bank pays 7.46% interest annually. How much money is in the bank account at the end of the tenth year. if no money is withdrawn? **[6]**

b) Explain risk & sensitivity analysis. **[4]**

OR

Q4) a) Investment for an energy proposal is Rs. 10.00 lakhs. Annual savings for the first three years is 1,50,000 2,00,000 and 3,00,000. Considering cost of capital as 10%, what is the net present value of the proposal? Will project meet firm expectations? **[5]**

b) What is the NPV of a project. (life 2 year) which requires an investment of Rs.60,000 and yield Rs.40,000 in the 1st year and Rs.50,000/- in the next year, if the Interest rate is 10%. **[5]**

P.T.O.

Q5) a) List the energy saving opportunities in pumping system. **[8]**

b) Calculate the efficiency of the boiler by direct method with the data given below. **[10]**

i) Type of boiler- oil fired

ii) Quantity of dry & saturated steam generated-6000kg/hr.

iii) Quantity of fuel consumed-410 kg/hr

iv) feed water temperature-70°C

v) Gross calorific value of oil-43500 kJ/kg

vi) Steam temperature & pressure- 180°C & 10 bar

vii) Enthalpy of Saturated steam at 10 bar & 180°C- 2776 kJ/kg

OR

Q6) a) Explain steam traps in details. **[8]**

b) A centrifugal pump is pumping 85 m^3/hr of water and pressure rise in the pump is 6kg/cm^2. If power drawn by motor is 25KW. Find out the pump efficiency. Assume motor efficiency as 90% & water density as 998 kg/m^3. **[10]**

Q7) a) What is Power Factor improvement? Explain methods of improving it.**[8]**

b) The lighting connected load for the small industry consisting of 140 Fluorescent tubes of 55 W each with magnetic ballast. In first option, the magnetic ballast of Fluorescent tubes is replaced by electronic ballast & power consumption of same fluorescent tubes reduces to 40W. Calculate the simple payback period of above replacement if cost of electronic ballast is Rs. 110. In second option, fluorescent tubes are replaced by energy efficient fluorescent tubes of 20 W & cost of Rs. 450 each. Calculate simple payback period. Which energy saving option is better & why? Consider usage of 16 hrs per day & an electrical tariff of Rs. 4 per KWh. **[8]**

OR

Q8) a) Write a detailed note on the Electricity Act 2003. **[8]**

b) The connected load for Bungalow are as below

i) 5 Bulbs of 60W each

ii) 6 Fluorescent tubes of 40w each

iii) 1 old Refrigerator 200 w each

iv) It is decide to replace the bulbs and tubes with 11 CFL. of 15w each and old Refrigerator by Energy Efficient Refrigerator 175w. Considering usage of 6 hrs per day and an electrical tariff of Rs. 4 per kWh. Calculate energy saving of Bulbs, Fluorescent tubes and Refrigerator replacement. **[8]**

Q9) a) Explain topping cycle of co-generation with an example. **[8]**

b) Explain concept of Pinch analysis. **[8]**

OR

Q10)a) Explain benefits of waste heat recovery systems. **[8]**

b) Explain with flow chart CDM project. **[8]**



Total No. of Questions : 10]

SEAT No. :

P-9344

[Total No. of Pages : 3

[6181]-579

B.E. (Mechanical)

ENERGY ENGINEERING

(2015 Pattern) (Semester - II) (402047)

Time : 2½ Hours] *[Max. Marks : 70*

Instructions to the candidates:

1) ***Attempt Q.1 or Q.2, Q.3 or Q.4, Q.5 or Q.6, Q.7 or Q.8, Q.9 or Q.10.***
2) ***Neat diagrams must be drawn wherever necessary.***
3) ***Figures to the right of each question indicate full marks.***
4) ***Assume suitable data wherever necessary and mention the same clearly.***
5) ***Use of steam tables, Mollier chart and calculator is allowed.***

Q1) a) Explain the concept of Carbon Credits in brief. **[5]**

b) A surface condenser receives 20 t/h of dry saturated steam at 40°C. The air leakage to the condenser is estimated to be 0.35 kg per 1,000 kg of steam. The condensate leaves at a temperature of 38°C Makeup water is supplied at 10°C. The cooling water enters at 32°C and leaves at 38°C. A separate air extraction pump (SJAE) is added and from the air cooler section air along with some steam leaves at 27 °C. The pressure in the condenser is assumed to remain constant. Calculate the rate of saving of condensate. **[5]**

OR

Q2) a) Which factors are considered for selection of coal in thermal power plant? **[5]**

b) What is purpose of ESP? Explain working with simple diagram. **[5]**

Q3) a) Write Note on : Hydrograph and its applications. **[5]**

b) Explain in brief disadvantages of Pulverized Coal Fire Boiler. **[5]**

OR

Q4) a) Explain the GCR by using following points **[5]**

i) Diagram ii) Construction, Working

b) What are sources of air leakages in condenser? How it affects performance of condenser? **[5]**

P.T.O.

Q5) a) A gas turbine plant of 800 kW capacities takes the air at 1.01 bar and 15°C. The pressure ratio of the cycle is 6 and maximum temperature is limited to 700°C. A regenerator of 75% effectiveness is added in the plant to increase the overall efficiency of the plant. The pressure drop in the combustion chamber is 0.15 bars as well as in the regenerator is also 0.15 bars. Assuming the isentropic efficiency of the compressor 80% and of the turbine 85%, determine the plant thermal efficiency. Neglect the mass of the fuel. **[10]**

b) Explain the applications of diesel power plant. What are environmental impacts of diesel power plant? **[8]**

OR

Q6) a) Air is drawn in a gas turbine unit at 15°C and 1.01 bar and pressure ratio is 7:1. The compressor is driven by the H.P. turbine and L.P. turbine drives a separate power shaft. The isentropic efficiencies of compressor and the H.P, L.P. turbines are 0.82, 0.85 and 0.85 respectively. If the maximum cycle temperature is 610°C, Calculate :

i) The net power developed by the unit per kg/s mass flow.

ii) The work ratio.

iii) The thermal efficiency of the unit.

Neglect the mass of fuel. Take adiabatic index for air gas as 1.4, 1.333 respectively. Take specific heat for air, gas as 1.005 KJ/Kg-K, 1.15 KJ/Kg-K respectively. **[10]**

b) Explain General Layout of Diesel Power Plant indicating different systems. **[8]**

Q7) a) Explain the Binary fluid geothermal power plant with simple diagram. Explain advantages & limitation of the same. **[8]**

b) Explain the Solar Pond based thermal power component arrangement diagram. What are limitation of the same. **[8]**

OR

Q8) a) Explain the working of Close cycle MHD generator with simple figure. Why seed material is injected in MHD generator? **[8]**

b) Write Note on : **[8]**

i) Fuel Cell

ii) Wind turbine operating characteristics

Q9) a) Write note on following : **[8]**

i) Power Transformer

ii) Relays and its requirements

b) The maximum (peak) load on a thermal power plant capacity of 60 MW is 50 MW at an annual load factor of 50%. The loads having maximum demands of 25 MW, 20 MW, 8 MW and 5 MW are connected to the power station. Determine: **[8]**

i) Average load on power station

ii) Energy generated per year

iii) Demand factor

iv) Diversity factor

OR

Q10)a) Write note on following : **[8]**

i) Methods of Earthing

ii) Generator cooling by hydrogen

b) A new factory having a maximum demand of 700 kW and a load factor of 25% is comparing two power supply agencies. Compare both based on cost of energy **[8]**

i) Public supply tariff is Rs. 40 per kW of maximum demand plus 2 paise per kWh.

Capital cost = Rs. 70,000

Interest and depreciation = 10%

ii) Private oil engine generating station.

Capital Cost = Rs. 250,000

Fuel consumption = 0.3 kg per kWh

Cost of fuel = Rs. 70 per tonne

Wages = 0.4 paise per kWh

Maintenance cost = 0.3 paise per kWh

Interest and depreciation = 15%.



Total No. of Questions : 10]

SEAT No. :

P-9345

[Total No. of Pages : 4

[6181]-580

B.E. (Mechanical/Mechanical Sandwich)

MECHANICAL SYSTEM DESIGN

(2015 Pattern) (Semester - II) (402048)

Time : 2½ Hours] *[Max. Marks : 70*

Instructions to the candidates:

1) ***Attempt Q.1 or Q.2, Q.3 or Q.4, Q.5 or Q.6, Q.7 or Q.8, Q.9 or Q.10.***
2) ***Neat diagrams must be drawn wherever necessary.***
3) ***Figures to the right indicate full marks.***
4) ***Assume suitable data if necessary.***
5) ***Use of logarithmic tables slide rule, Moiller charts, electronic pocket calculator and steam tables is allowed.***

Q1) a) What is structural formula Explain the procedure to construct the structural diagram for machine tool gear box. Draw structural diagram for following structural formulae 2(1) 2(2) 2(4) **[6]**

b) Compare between normal distribution and Standard normal distribution. **[4]**

OR

Q2) a) Why there is necessity of machine tool gear box for machine tool. Compare Structural Diagram & Speed Diagram. **[6]**

b) Two populations X and Y added together. Derive the expression to find mean of the resultant population. **[4]**

Q3) A triple ply belt conveyor is required to transport 4 tons of iron ore per hour at a conveyor speed of 3 m/s. If the mass density of iron ore is 2.5 tons/m^3 **[10]**

Determine :

a) Maximum suitable inclination for the conveyor

b) Diameter of the drive pulley

c) The ger box reduction ratio, if the motor speed is 1440 rpm.

P.T.O.

Use following data

Belt Inclination (α)	16°-20°	21°-25°	26°-30°	31°-35°
Flowability factor 'k'	2.5×10^{-4}	2.35×10^{-4}	2.20×10^{-4}	2.05×10^{-4}

Material factor for plies for belt, $K_1 = 2.0$

Belt tension and arc of contact factor, $K_2 = 80$

OR

Q4) a) Explain the need of idlers in belt conveyors, also draw different types of idlers used in belt conveyors. **[4]**

b) A horizontal belt conveyor is used for transporting the bulk material having mass density of 11772 N/m^3. The surcharge factor C for the flat belt is 0.2 while the belt width is 700 mm. If the belt speed is 1.75 m/s, determine the capacity of conveyor. **[6]**

Q5) a) Derive the expression to determine the principal stresses at the inner surface of a thick cylinder. **[8]**

b) A seamless cylinder of storage capacity 0.025 m^3 and made of alloy steel 20Mo55 (Sut = 500 N/mm^2) is to be used to store a fluid at 15 MPa gauge pressure. The length of the cylinder is twice its inner diameter. If the factor of safety is 2, determine the cylinder dimensions: **[10]**

OR

Q6) a) Explain with sketch the different types of formed heads used as end closures in cylindrical pressure vessels. Explain the design procedure of hemispherical head. **[8]**

b) A cylindrical pressure vessel is made up of stainless steel. Assuming the following data, determine the thickness of vessel shell

Internal diameter of vessel : 1500 mm

Design pressure: 0.44 MPa

Permissible stress of material : 130 MPa

Weld joint efficiency : 85 %

Assuming both ends as closed and external forces as well as corresponding stresses as negligible, determine the resultant stress in the shell. **[10]**

Q7) a) What are the types of piston rings? Why is more number of thin piston rings preferred over small number of thick rings? **[6]**

b) A 2 stroke petrol engine is to be designed for a brake power of 7kW at a speed of 800 rpm. The mechanical efficiency is 80%. If the indicated mean effective pressure is 0.5 MPa, determine: (i) the bore and length of cylinder liner; (ii) the thickness of cylinder liner; (iii) the thickness of cylinder head and (iv) Resultant stresses in the liner if the Poisson's ratio is 0.25. **[10]**

OR

Q8) The following data refers to a four stroke diesel engine : **[16]**

a) Cylinder bore = 250 mm,

b) Piston stroke = 300 mm,

c) Speed = 600 rpm,

d) Indicated mean effective pressure = 0.6 N/mm^2,

e) Maximum gas pressure = 4 N/mm^2,

f) Brake specific fuel consumption = 0.25 kg/kW–h

g) Higher calorific value of fuel = 44,000 kJ/kg

h) Mechanical efficiency = 80%.

Assume that 5% of total heat developed in the cylinder is transmitted by the piston. The piston is made of gray cast iron FG200 (Sut = 200 N/mm^2 and K = 46.6 W/m°C) and the factor of safety is 5. The temperature difference between the center and the edge of the piston head is 220°C

a) Determine the thickness of the piston head by strength consideration and thermal consideration.

b) State whether a cup is required in the top of piston head, If so calculate the radius of the cup.

Q9) a) Explain the Johnsons method of optimum design. **[6]**

b) A shaft is to be used to transmit a torque of 900 N-m. The required torsional stiffness of the shaft is 90 N-m/degree, While the factor of safety based on yield strength is 1.5. Using maximum shear stress theory, design the shaft with objective of minimizing the weight. **[10]**

Material	Mass density, ρ (Kg/m^3)	Modulus of rigidity, G (GPa)	Yield Strength Syt (MPa)	Material Cost, C (Rs/N)
M1	8500	80	130	16
M2	3000	26.5	50	32
M3	4800	40	90	480
M4	2100	16	20	32

OR

Q10) A thin spherical vessel is subjected to an internal pressure of 5 N/mm^2. The mass of the empty vessel should not exceed 150 kg. If the factor of safety based on yield strength is 2.0. Design the pressure vessel with the objective of maximizing the gas pressure out of the following materials. **[16]**

Material	Tensile Yield Strength Syt (MPa)	Mass density, ρ (Kg/m^3)
Alloy steel 15Cr90Mo55	450	7800
Al Alloy	150	2800
Titanium alloy	800	4500
Magnesium alloy	100	1800

□□□

Total No. of Questions : 10]

SEAT No. : ____

P-9346

[Total No. of Pages : 3

[6181]-581

B.E. (Mechanical)

TRIBOLOGY

(2015 Pattern) (Semester - II) (402049A) (Elective - III)

Time : 2½ Hours] ***[Max. Marks : 70***

Instructions to the candidates:

1) ***Solve Q1 or Q2, Q3 or Q4, Q5 or Q6, Q7 or Q8 and Q9 or Q10.***
2) ***Neat diagrams must be drawn wherever necessary.***
3) ***Figure to the right indicates full marks.***
4) ***Use of logarithmic tables and electronic pocket calculator is allowed.***
5) ***Assume suitable data, if necessary.***

Q1) a) State assumptions made in Reynolds equation **[4]**

b) Show that the volume of abrasive wear per unit sliding distance with conical abrasive particles is given by **[6]**

$$Q = \left[\frac{2k_w \cot\alpha}{\pi}\right]\frac{W}{P}$$ with usual notations

OR

Q2) a) What is friction? Explain the laws of dry friction. **[4]**

b) State and explain applications and the importance of Tribology in industries. **[6]**

Q3) a) State and explain types of gaskets. **[4]**

b) Explain the importance of recycling of used oils. Explain different ways of disposal of used oil. **[6]**

OR

Q4) The following data is given for a 360° hydrodynamic bearing : **[10]**

Radial load = 3.2 kN

Journal speed = 1490 rpm

Journal diameter = 50 mm

Bearing length = 50 mm

Radial clearance = 0.05 mm

Viscosity of lubricant = 25 cP

P.T.O.

Assuming that the total heat generated in the bearing is carried by the total oil flow in the bearing. Use Raimondi and Boyd chart given in table no. - I and calculate :

a) Flow requirement in liters/min;

b) Power lost in friction; and

c) Temperature rise.

Table-no.-I (Dimensionless performance parameters for full hydrodynamic journal bearing.)

I/d	ε	h_0/c	S	Φ	(r/c)f	Q/rcn_sl	Q_s/Q	p/p_{max}
1	0.1	0.9	1.33	79.5	26.4	3.37	0.150	0.540
	0.2	0.8	0.631	74.02	12.8	3.59	0.280	0.529
	0.4	0.6	0264	63.10	5.79	3.99	0.497	0.484
	0.6	0.4	0.121	50.58	3.22	4.33	0.680	0.415
	0.8	0.2	0.0446	36.24	1.70	4.62	0.842	0.313
	0.9	0.1	0.0188	26.45	1.05	4.74	0.919	0.247
	0.97	0.03	0.00474	15.47	0.514	4.82	0.973	0.152

Q5) a) State and explain different types of energy losses in hydrostatic bearing. **[8]**

b) A rectangular plate is approaching an oily fixed plane surface with velocity 'V' at the instant, the film thickness is h_1, if both the surfaces are separated by a lubricant of viscosity 'μ'. Derive the expression for the time 't' taken to reduce the film thickness from h_1 to h_2. **[10]**

OR

Q6) a) The following data is given for a hydrostatic thrust bearing : **[14]**

Shaft speed = 720 rpm

Shaft diameter = 400 mm

Recess diameter = 250 mm

Film thickness = 0.15mm

Viscosity of lubricant = 30 cP

Specific gravity = 0.86

Specific heat = 1.75 kJ/kg°C

Supply pressure = 5 MPa,

Calculate :

i) Load carrying capacity of the bearing;

ii) Flow requirement in liters/min;

iii) Pumping power loss;

iv) Frictional power loss; and

v) Temperature rise.

Assume that the total power loss in the bearing is converted into frictional heat.

b) Explain squeeze film lubrication with example. **[4]**

Q7) a) Explain the phenomenon of Elasto-hydrodynamic lubrication [EHL] and how it differs from hydrodynamic lubrication. State the applications of EHL. **[8]**

b) Explain porous gas bearings and state advantages and disadvantages/ limitations of porous gas bearings. **[8]**

OR

Q8) a) Explain the significance of the Hertz theory in Elasto-hydrodynamic Lubrication. Write Ertel-grubin equation with all specific terms and also write the limitations of this equation. **[8]**

b) State and explain dynamic characteristics of gas lubricated bearings. **[8]**

Q9) a) Explain in detail, the techniques used for surface measurement. **[8]**

b) Explain concept and scope of surface engineering. **[8]**

OR

Q10)a) Explain following surface coating processes **[10]**

i) plating,

ii) fusion process and

b) Write short note on : Diffusion **[6]**

□□□

Total No. of Questions : 12]

SEAT No. : ____

P-9347

[Total No. of Pages : 3

[6181]-582
B.E. (Mechanical Engineering)
INDUSTRIAL ENGINEERING
(2015 Pattern) (Semester - II) (402049B) (Elective - III)

Time : 2½ Hours] ***[Max. Marks : 70***

Instructions to the candidates :

1) ***Answers should be written in one answer book.***
2) ***Answer Q.1 or Q.2, Q.3 or Q.4, Q.5 or Q.6, Q.7 or Q.8, Q.9 or Q.10, Q.11 or Q.12.***
3) ***Neat diagrams must be drawn wherever necessary.***
4) ***Figures to the right side indicate full marks.***
5) ***Assume suitable data, if necessary.***

Q1) Define Industrial engineering. Explain in brief various function of Industrial engineering? **[8]**

OR

Q2) Discuss in details factors that affect productivity. **[8]**

Q3) Explain with proper example Multiple activity chart. **[8]**

OR

Q4) a) Differentiate between Value Engineering and Value Analysis. **[4]**

b) Show and describe method study symbols for recording the facts. **[4]**

Q5) A work sampling study was conducted to establish the standard time for an operation. The observations of the study given below; **[6]**

Total no. of operations = 160
Manual (hand controlled work = 14
Machine controlled work = 106
Average performance rating = 80%
No. of parts produced = 36
Allowance for personal needs and fatigue = 10%
Study conducted for 3 days
Available working hours/day = 8hrs
Calculate standard time per piece.

OR

P.T.O.

Q6) The elemental timings are given below along with the respective ratings. Assuming rest and personal allowances as 12% and contingency allowance as 2%, calculate the standard time for the operation. **[6]**

Element	Observed Time	Rating	Remark
A	0.2	90	
B	0.05	80	
C	0.03	100	
D	0.78	100	
E	0.06	100	
F	0.05	100	
G	0.02	85	Once in 5 Pieces
H	0.06	80	
I	0.10	90	
J	0.04	90	Once in 20 Pieces

Q7) a) Explain in details MRP and MRP - II. **[8]**

b) ABC Company uses exponential smoothing with $\alpha = 0.15$ for estimating a demand. Following table shows the demand for 6 months. The forecast for June is 500 units. Estimate the forecast for December. **[8]**

Month	Actual Demand	Forecast
June	450	500
July	505	
August	516	
September	488	
October	467	
November	554	

OR

Q8) a) Short Note on ERP with Block Diagram. **[8]**

b) Explain in brief various functions of Production Planning and Control. **[8]**

Q9) a) Write short note on **[8]**

i) Material Flow Pattern

ii) Line Balancing

b) Define plant layout. What are various factors involved in selection in selection of site for good plant. **[8]**

OR

Q10) a) Enlist material handling equipments. Describe any three material handling equipment with suitable illustration. **[8]**

b) A manufacturing company requires 9500 units per year. Ordering cost is Rs. 125 per order & carrying cost is 20%. Purchase price per unit is Rs. 45. Determine : **[8]**

i) EOQ

ii) Optimum no. of orders

iii) Total cost including acquisition of material

Q11) a) A Company has given following information **[8]**

Data	Rs.
Sales	1,50,000
Variable Overheads	1,20,000
Gross Profit	60,000
Fixed Overheads	20,000
Net Profit	40,000

Find

i) P/V ratio

ii) BEP

iii) Net Profit when the sales are Rs. 4,00,000

iv) Sales required to earn a profit of Rs 80,000

b) What is importance of standard costing? Explain different elements of costs. **[8]**

OR

Q12) a) Explain break-even analysis with neat chart? What are assumptions made in break-even analysis? What are different applications of break-even analysis. **[8]**

b) Explain in brief different functions of human resource department. Comment on concept of key result areas and performance appraisal of employee. **[8]**

▽▽▽▽

Total No. of Questions : 10]

SEAT No. :

P-9348

[Total No. of Pages : 2

[6181]-583
B.E. (Mechanical)
ROBOTICS (Elective-III)
(2015 Pattern) (Semester - II) (402049C)

Time : 2½ Hours] ***[Max. Marks : 70***

Instructions to the candidates :

1) ***Answer Q1 or Q2, Q3 or Q4, Q5 or Q6, Q7or Q8, Q9 or Q10.***
2) ***Figures to the right indicate full marks.***
3) ***Neat diagrams must be drawn, wherever necessary.***
4) ***Use of scientific calculator allowed.***
5) ***Assume suitagble data if necessary.***

Q1) a) Compare the resolution, accuracy and repeatability of a robotic system. **[5]**

b) Explain the working principle of the Tactile sensor with a neat sketch. **[5]**

OR

Q2) a) Give different robot configurations based on coordinate system. **[5]**

b) Write short note on robot anatomy with neat sketch. **[5]**

Q3) a) Explain kinematics of redundant robots. **[5]**

b) A Vacuum gripper is used to lift a weight of 10 kN with the help of two suction cups, each having diameter of 200 mm. Determine the negative pressure required to lift the weight. **[5]**

OR

Q4) a) Explain the term 'Compliance' in Robotics with a suitable example. **[5]**

b) What are the essential characteristics of a sensor in a Robot. **[5]**

Q5) a) Write a short note on the following: **[10]**

i) Forward Dynamics of a Robot,

ii) Inverse Dynamics of a Robot

b) Explain with a suitable example the force control of a robot manipulator. **[8]**

OR

P.T.O.

Q6) a) It is desired to have a joint of a six-axis robot move from an initial angle of 0° to a final angle of 100° in 10 seconds. Using a third-degree polyiomial. calculate the joint angles at an interval of 2 seconds. Assume velocity at the initial and final position is zero. **[10]**

b) Differentiate between Joint space trajectory planning and Cartesian space trajectory planning. **[8]**

Q7) a) Describe the different steps in trajectory planning. **[8]**

b) A rotary arm of a manipulator is to rotate from 15° to 120° in 8 seconds. Determine coefficients of cubic polynomial to interpolate a smooth trajectory. Plot the position, velocity and acceleration variation against time. **[8]**

OR

Q8) a) Write short note on control i) law of positioning ii) considerations in trajectory planning. **[8]**

b) Explain with a neat block diagram the Machine Vision System for a Robot. **[8]**

Q9) a) Discuss the application of Artificial Intelligence to Robotics systems. **[8]**

b) Elaborate on the role of Robotic systems in Industry 4.0. **[8]**

OR

Q10)a) What is the Internet of Robotic Things? **[8]**

b) Elaborate on the different types of Robot Simulations **[8]**

Total No. of Questions : 10]

SEAT No. : ____

P-9349

[Total No. of Pages : 2

[6181]-584

B.E. (Mechanical Engineering)

ADVANCED MANUFACTURING PROCESSES

(2015 Pattern) (Semester - II) (402050A) (Elective - IV)

Time : 2½ Hours] ***[Max. Marks : 70***

Instructions to the candidates:

1) ***Solve Q.1 or Q.2, Q.3 or Q.4, Q.5 or Q.6, Q.7 or Q.8, Q.9 or Q.10.***
2) ***Neat diagrams must be drawn wherever necessary.***
3) ***Figures to the right indicate full marks.***

Q1) a) Explain with neat sketch electro hydraulic forming. Write its applications. **[6]**

b) Write down four points of comparison between Flow forming and Spinning Process. **[4]**

OR

Q2) a) Explain with neat sketch Incremental sheet metal forming and list their applications. **[6]**

b) Explain the construction and Working of Laser Beam welding. **[4]**

Q3) a) Explain with neat sketch Electro Jet Machining process with its process parameters. **[6]**

b) Write short note on Cryogenic welding. **[4]**

OR

Q4) a) Explain principle, working & applications of 'Magnetic Abrasive Finishing' with neat line diagram. **[6]**

b) Explain the principal of laser based heat treatment and name any four different types of laser sources used in heat treatment. **[4]**

Q5) a) Describe single point diamond turning in terms of its process characteristics, the machine tool, material machined from quality control aspects. **[6]**

P.T.O.

b) Explain the process of Focused Ion Beam Machining. **[6]**

c) Explain the need of micro and nano machining techniques. **[4]**

OR

Q6) a) Explain Ultrasonic Micromachining process in detail with applications. **[6]**

b) Explain concept of Photo Lithography with neat sketch. Write its applications. **[6]**

c) What are the challenges in micro and nano machining techniques? **[4]**

Q7) a) What is additive manufacturing process? Describe the different steps by which a part or component is build using additive manufacturing process. **[8]**

b) State the working principal of Powder Based Fusion Additive Manufacturing Process with neat sketch. Write down its advantages, limitations and applications (2 Each). **[8]**

OR

Q8) a) Explain the working principle and process steps of extrusion based (FDM) additive manufacturing process with neat sketch. **[8]**

b) i. Write a short note on 'Design for Additive Manufacturing'. **[4]**

ii. Write applications of 'Additive Manufacturing' in Medical & Aerospace industries. **[4]**

Q9) a) Explain operating principle of 'Atomic Force Microscope' with neat sketch. **[6]**

b) Explain operating principle of 'Scanning Tunneling Microscope' with neat sketch. **[6]**

c) Explain with sketch operating principle of 'Nuclear Magnetic Resonance Spectroscopy'. **[6]**

OR

Q10)a) Explain operating principle of 'Scanning Electron Microscopes' with neat sketch. **[6]**

b) Explain operating principle of 'Transmission Electron Microscope' with neat sketch. **[6]**

c) Explain with sketch operating principle of 'Energy-dispersive X-ray spectroscopy'. **[6]**



Total No. of Questions : 10]

SEAT No. :

P-9350

[Total No. of Pages : 3

[6181]-585

B.E. (Mechanical)

SOLAR AND WIND ENERGY

(2015 Course) (Semester - II) (402050B) (Elective - IV)

Time : 2½ Hours] ***[Max. Marks : 70***

Instructions to the candidates:

1) ***Draw suitable neat diagrams, wherever necessary.***
2) ***Figures to right indicate full marks.***
3) ***Use of electronic pocket calculator is allowed.***
4) ***Assume suitable data, if required.***

Q1) a) Explain present energy scenario and role of governing bodies for solar and wind energy. **[6]**

b) Explain solar tower. **[4]**

OR

Q2) a) Explain any one solar measurement instrument with figure. **[6]**

b) Explain solar distillation with figure. **[4]**

Q3) a) Classify solar thermal collectors and Describe parabolic dish plate collector with the help of suitable diagram. **[6]**

b) Explain solar PV Cell with figure. **[4]**

OR

Q4) a) Classify solar concentrating collectors and explain point contact concentrator with figure. **[6]**

b) Describe classification of solar cells based on type of active material. **[4]**

P.T.O.

Q5) Design a solar PV System wherein load consists of a CFL,TV,Fan, Refrigerator and Computer. The system should allow the use of loads in non sunshine hours. The operating hours and the power rating of these loads are given in following table. **[18]**

Load	Watts	Hr/day	Numbers
CFL	18	6	10
Fan	70	6	8
TV(21")	270	3	2
Refrigerator	150	8	8
Computer	250	2	4

OR

Q6) Explain step by step design process of solar water heater of 1000 lit capacity used for household application. **[18]**

Q7) a) Sketch the diagram of HAWT and explain function of its main components. **[8]**

b) Describe main considerations in selecting a site for horizontal and vertical axis wind generators. **[8]**

OR

Q8) a) Explain analysis of aerodynamic forces acting on wind mill blades with figures. **[8]**

b) Explain various design considerations for horizontal and vertical axis wind turbines. **[8]**

Q9) A propeller type turbine has a following data

Speed of free wind at a height of 10 m = 12 m/sec

$\alpha = 0.14$

air density = 1.226 kg/m^3

height of tower = 100m

diameter of rotor = 60m

wind velocity at turbine reduces by 25%

generator efficiency = 95 %

Find total power available to wind, power extracted by wind turbine, electrical power generated, axial thrust on turbine, maximum axial thrust on turbine. **[16]**

OR

Q10) a) Explain in detail step by step design process for miniature wind mill. **[8]**

b) Compare status of wind energy potential and installation in india and global level. **[8]**

⌘⌘⌘

Total No. of Questions : 10]

SEAT No. :

P-9351

[Total No. of Pages : 2

[6181]-586

B.E. (Mechanical)

PRODUCT DESIGN AND DEVELOPMENT

(2015 Pattern) (Semester - II) (402050C) (Elective - IV)

Time : 2½ Hours] ***[Max. Marks : 70***

Instructions to the candidates:

1) ***Solve Q.1 or Q.2, Q.3 or Q.4, Q.5 or Q. 6. & Q.7 or Q.8 and Q.9 or Q.10.***
2) ***Neat diagrams must be drawn wherever necessary.***
3) ***Figures to the right side indicate full marks.***
4) ***Use of calculators is allowed.***
5) ***Assume suitable data if necessary.***

Q1) a) Discuss the importance of Product Simplification with a suitable example. **[5]**

b) Discuss Essential Factors for product design with a suitable example. **[5]**

OR

Q2) a) Differentiate between product development and product design. **[5]**

b) Discuss the concept of Product Testing and Validation. **[5]**

Q3) a) Explain, morphological analysis with suitable example. **[5]**

b) Explain market segmentation with suitable example. **[5]**

OR

Q4) a) Explain the concept of brainstorming with suitable example. **[5]**

b) How standardization, simplification and specialization are correlated to product design process? Explain. **[5]**

Q5) a) What is a force flow diagram? Apply and explain for the paper-punching machine. **[8]**

b) Define benchmarking. Discuss its significance in view to Product Development Process. **[8]**

P.T.O.

OR

Q6) a) Explain the following tools in benchmarking **[8]**

i) Indented Assembly Cost Analysis

ii) Trend Analysis

b) Discuss Product Teardown Process with a suitable example. **[8]**

Q7) a) Discuss guideline design for casting and forging in detail. **[8]**

b) Discuss in detail manufacturing cost analysis. **[8]**

OR

Q8) a) Discuss various regional and global issue of issue of environmental pollution. **[8]**

b) Discuss guideline for design for environment and materials. **[8]**

Q9) a) Explain the components of PDM (Product Data Management) in detail. **[10]**

b) Explain the elements of PLM (Product Lifecycle Management) in detail. **[8]**

OR

Q10)a) Explain the role of customers and vendors in implementation of PLM. **[10]**

b) Explain different elements of product life cycle management in detail. **[8]**

Total No. of Questions : 10]

SEAT No. : ____

P-9352

[Total No. of Pages : 4

[6181]-587
B.E. (Mechanical-Sandwich)
MECHANICAL VIBRATIONS
(2015 Pattern) (Semester - II) (402066)

Time : 2½ Hours] ***[Max. Marks : 70***

Instructions to the candidates :

1) ***Solve Q.1 or Q.2, Q.3 or Q.4, Q.5 or Q.6, Q.7 or Q.8 and Q.9 or Q.10.***
2) ***Draw Neat diagrams wherever necessary.***
3) ***Use of scientific calculator is allowed.***
4) ***Assume suitable data wherever necessary.***
5) ***Figures to the right indicate full marks.***

Q1) a) Define the following terms - **[4]**

i) Natural frequency

ii) Critical damping coefficient

iii) Damping Factor

iv) Logarithmic Decrement

b) A right circular cylinder of mass '*m*' and radius '*r*' is connected to a spring of stiffness '*k*' at its center as shown in figure. The cylinder is free to roll on horizontal rough surface without slipping. Determine the natural frequency of small angular oscillations of the cylinder. **[6]**

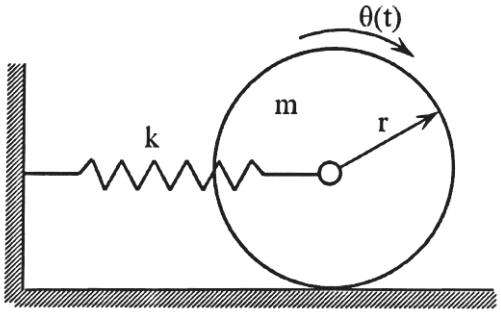

OR

P.T.O.

Q2) a) Draw the time-displacement graph of free vibration of 1-dof viscously damped system for different damping conditions - **[4]**

i) zero damping,

ii) under damping,

iii) critical damping and

iv) over damping

b) A block of mass 10 kg is placed on a horizontal surface and attached to a horizontal spring of stiffness 1200 N/m. The coefficient of sliding friction between the block and surface is 0.2. When the mass is given an initial displacement of 80 mm, calculate **[6]**

i) the frequency of free oscillations.

ii) the number of cycles corresponding to 50% reduction in the initial amplitude

Q3) a) Explain with neat sketch the transient state and steady state of vibration related to forced vibration. **[4]**

b) A single DOF mass-spring-damper oscillator is excited by a harmonic force $f(t) = 3 \sin(15\ t)$ N. The oscillator has a mass of 10 kg, stiffness 1000 N/m and damping coefficient 50 N-s/m. Determine **[6]**

i) Steady state amplitude of vibration of mass and

ii) Maximum force transmitted to the support

OR

Q4) a) Define the following terms in relation to forced vibration - **[4]**

i) Magnification factor

ii) Quality factor

iii) Force transmissibility

iv) Motion transmissibility

b) A rotor of 10 kg mass is mounted midway on a horizontal shaft of diameter 3 cm which is simply supported with a span of 1.2 m in bearings at both the ends. The center of gravity of the rotor is 0.2 mm offset from its axis of rotation. The modulus of elasticity of shaft material is 200 GPa. Determine - **[6]**

i) Static deflection of rotor

ii) Critical speed of shaft

iii) Amplitude of steady state vibrations of rotor at a speed of 3000 rpm.

Q5) a) Explain two degree of freedom system with any two practical examples. **[6]**

b) For the system of spring and masses shown in the figure, derive differential equations of motion in terms of displacement x_1 and x_2 of masses. Determine natural frequencies and corresponding mode shapes. Describe the mode shapes graphically. **[10]**

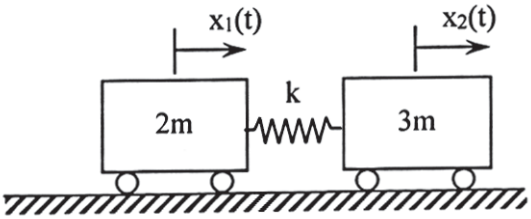

Figure: Q 5 b)

OR

Q6) a) Explain the concept of 'Torsionally Equivalent Shaft'. **[6]**

b) Two discs A and B of mass MI J_A = 2 kg-m^2 and J_B = 3 kg-m^2 are mounted on a shaft of torsional stiffness K_t = 100 N-m/rad as shown in the figure. The shaft can freely rotate in the end support bearings. **[10]**

i) Draw FBD of each disc and derive the differential equations of motion in terms of angular displacement θ_A and θ_B of the discs.

ii) Derive the frequency equation and find two natural frequencies of the rotor.

iii) Find the mode shapes corresponding to each natural frequency and describe it graphically.

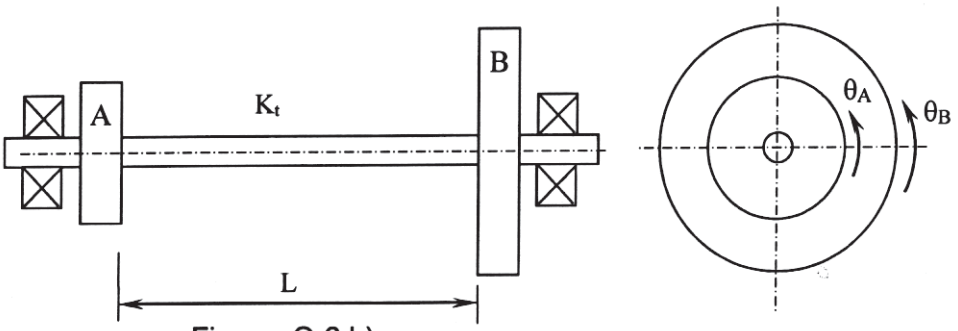

Figure: Q 6 b)

Q7) a) Differentiate between static and dynamic balancing. Why there is a need of accurate dynamic balancing of high speed machines? **[4]**

b) Four masses A, B (10 kg), C (5.5 kg) and D (3.6 kg) are attached to a shaft at radii 0.1, 0.225, 0.15 and 0.15 m respectively. The planes in which the masses revolve are spaced 0.6 m apart. Determine the magnitude of mass A and relative angular position of all masses with respect to mass B to achieve the complete dynamic balance. **[12]**

OR

Q8) a) Explain the concept of partial balancing in single cylinder IC engine. **[4]**

b) A four stroke four cylinder inline engine has firing order of 1-4-2-3. The length of crank and connecting rod are 80 mm and 320 mm respectively. The angular position of cranks is at equal angles and engine cylinders are at 180 mm apart. The mass of reciprocating parts of each cylinder is 3 kg. Determine unbalanced primary and secondary forces and couples at a speed of 2000 rpm. **[12]**

Q9) a) Explain in brief various methods and techniques for vibration control. **[6]**

b) Explain with neat sketches the working principle of seismic sensor for vibration measurement. **[6]**

c) The static deflection of the vibrometer mass is 20 mm. The instrument when attached to machine vibrating with a frequency of 125 Hz, records the relative amplitude of 0.3 mm. Find the amplitude of displacement, velocity and acceleration of the machine vibration. **[6]**

OR

Q10) a) Explain with neat labeled sketches a typical arrangement of vibration measurement system. **[6]**

b) What is Dynamic vibration absorber? Explain working principle of undamped dynamic vibration absorber. **[6]**

c) Explain the method of vibration based condition monitoring of machines. **[6]**

▽▽▽▽

Total No. of Questions : 10]

SEAT No. :

P-9353

[Total No. of Pages : 3

[6181]-588

B.E. (Mechanical - Sandwich)

FINITE ELEMENT ANALYSIS

(2015 Pattern) (Semester - II) (402068C) (Elective - I)

Time : 2½ Hours] *[Max. Marks : 70*

Instructions to the candidates:

1) ***Answer Q1 or Q2, Q3 or Q4, Q5 or Q6, Q7 or Q8, Q9 or Q10.***
2) ***Figures to the right side indicate full marks.***

Q1) a) Explain Finite Element Analysis with basic steps. **[6]**

b) Write difference between finite element method and finite difference method. **[4]**

OR

Q2) Find the displacement and reaction for each section in Fig. 1. **[10]**

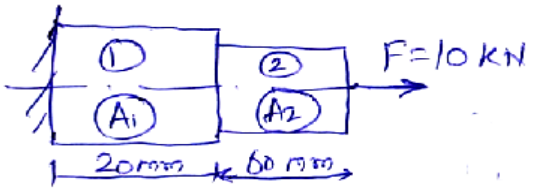

Fig. 1

Given Data

$A_1 = 200\ mm^2$ $E_1 = 200\ GPa$

$A_2 = 180\ mm^2$ $E_2 = 120\ GPa$

Axial Pull F = 10kN

Q3) a) Explain the importance of boundary conditions in FEA Analysis with types and neat sketches. **[6]**

b) Explain different types of Elements used in FEA with sketches. **[4]**

OR

Q4) Find the displacement and reaction for each section in Fig. 2. **[10]**

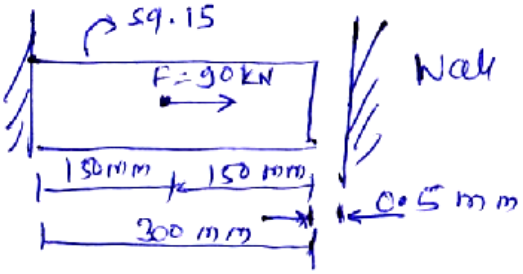

Fig. 2

Given Data

Uniform material

With $E = 80 \times 10^3\ N/mm^2$

P.T.O.

Q5) a) Explain Isoparametric, super parametric and subparametric element. **[6]**

b) Point P is located in rectangular element having natural coordinates (0.3,0.75). Determine coordinates of point 'p'. **[10]**

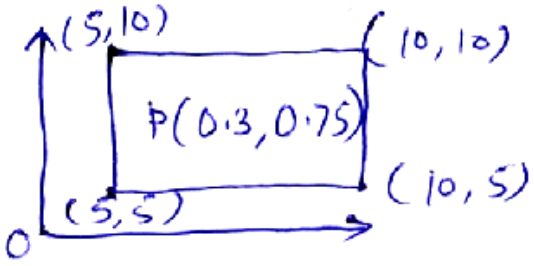

OR

Q6) a) Explain step by step procedure of Guass '2' and '3' point numerical Integration method and how it is applied in iso-parametric formulations. **[8]**

b) Evaluate the following integrals using two point Gauss quadrature method.

$$I = \int_{-1}^{+1}\int_{-1}^{+1} [r^2 + 2rs + s^2]dr.ds$$ **[8]**

Q7) a) Write down governing equation of steady state heat transfer. Also write element stiffness matrix and compare it with bar element. **[8]**

b) Write down various steps involved in processing step to solve for 1D heat transfer problem using finite element analysis. **[8]**

OR

Q8) a) Derive FEA stiffness matrix for pin fin heat transfer problem. **[8]**

b) A composite wall consisting of three elements as shown in fig. 3. The outer temperature is To = 20°C convection heat transfer takes place on the inner surface of the wall T∞ = 800°C and h = 25 W/m²°C. Determine the temperature distribution in wall. **[8]**

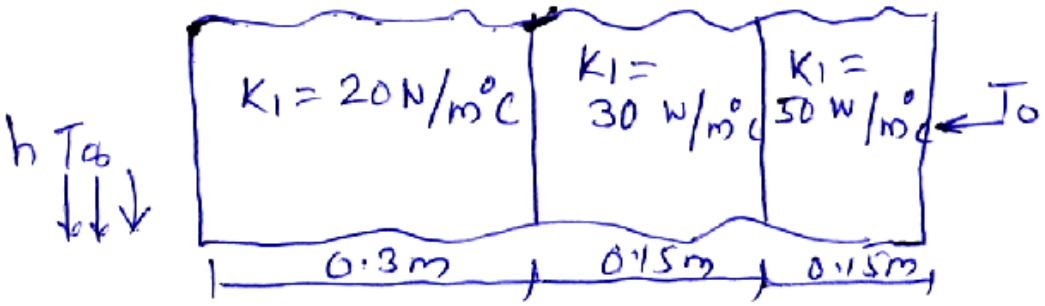

Fig.3

Q9) a) Explain the difference between lumped mass matrix and consistant mass matrix techniques for modal analysis of structures. **[8]**

b) Estimate the natural frequencies of axial vibrations of bar as shown in fig. 4. Using both consistent and lumped mass matrices and compare the results. The bar is having uniform cross section with area $A = 50 \times 10^{-6} m^2$, lenght L = 1.5m, modulus of Elasticity. $E = 2 \times 10^{11}$ N/m^2 and density $\rho = 7800$ kg/m^3. Model the bar using two elements. **[10]**

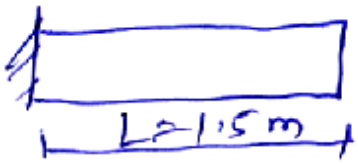

Fig.4

OR

Q10)a) Write down lumped mass matrix and consistent mass matrix for following elements. **[9]**

i) Bar element

ii) Plane truss element

iii) Triangular element

b) Find the natural frequencies of longitudinal vibrations of the unconstrained stepped bar of cross sectional areas A and 2A having equal step lengths as shown in Fig. 5. **[9]**



Fig. 5

Total No. of Questions : 8]

SEAT No. : ____

P-9354

[Total No. of Pages : 3

[6181]-589

B.E. (Mechanical Sandwich Engineering)

HYDRAULICS AND PNEUMATICS

(2015 Pattern) (Semester - II) (402068D) (Elective - I)

Time : 2½ Hours] ***[Max. Marks : 70***

Instructions to the candidates:

1) ***Answer Q.1 'OR' Q.2, Q. 3 'OR' Q.4, Q. 5 'OR' Q.6, Q. 7 'OR' Q.8.***
2) ***Figures to the right indicate full marks.***
3) ***Use of non-programmable scientific calculator is allowed.***
4) ***Assume data wherever necessary and mention it.***
5) ***Draw neat and suitable figure wherever necessary.***
6) ***Use of steam table is permitted.***

Q1) a) List the four fields of application where fluid power can be used more effectively than any other power sources. Explain in detail. **[4]**

b) Write note on pressure compensated flow control valve. **[8]**

c) Explain with neat sketch the working of pilot operated pressure reducing valve. **[8]**

OR

Q2) a) Draw the neat sketch and explain the working of a typical variable delivery vane pump. **[8]**

b) Enlist different types of accumulators used in hydraulic circuits. State their applications. **[4]**

c) Draw a net sketch and explain working of a typical pressure and temperature compensated flow control valve. **[8]**

Q3) a) Draw meter-in and meter-out circuits and State their advantages and disadvantages and disadvantages. **[8]**

b) Explain application of counter balanced valve with typical circuit. **[8]**

OR

P.T.O.

Q4) a) Draw hydraulic circuit for cylinder synchronization with two cylinders connected in parallel. State when it will give perfect synchronization. **[8]**

b) A hydraulic cylinder is required to move with equal extension and retraction speed. What are the different methods to achieve it? Explain with a suitable circuit. **[8]**

Q5) a) Explain with net sketch working of "AND" valve with a typical application. **[5]**

b) Draw a net sketch and explain working of a typical 5 way 2 position solenoid operated directional control valve used in pneumatic circuit. **[8]**

c) Write a note on selection criteria of compressor for pneumatic systems. **[4]**

OR

Q6) a) Explain following components with applications : **[8]**

i) Pneumatic / vacuum clamp

ii) Shuttle / OR valve

b) What is the necessity of quick exhaust valve in pneumatic control circuit? Explain. **[4]**

c) Explain the working of time delay valve with typical application. **[5]**

Q7) a) A double-acting cylinder is hooked up in a regenerative circuit for drilling application. The relief valve is set at 75 bar. The piston diameter is 140 mm and the rod diameter is 100 mm. If the pump flow is 80 lit/min, find cylinder speed and load carrying capacity during extension and retraction stroke. **[10]**

b) Analyze the circuit shown in Fig 7(b). **[7]**

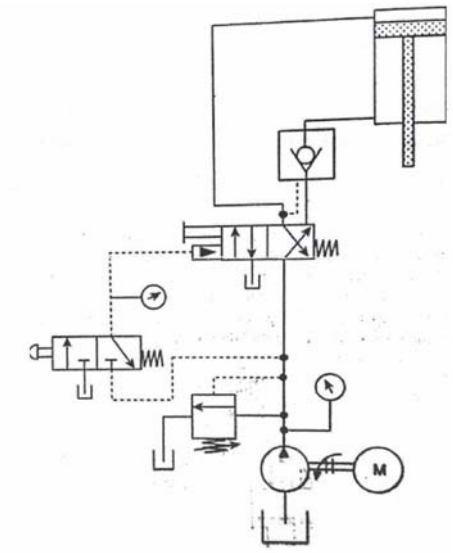

Fig 7(b)

OR

Q8) a) Two double-acting cylinders are to be synchronized by connecting them in series. The load acting on each cylinder is 4000. If one of the cylinder has piston diameter of 50 mm and rod diameter of 28 mm, find the following : **[10]**

i) The diameter of second cylinder

ii) Pressure requirement of the pump

Power of the pump in kW, if cylinder velocity is 4 m/s.

b) Analyze the circuit shown in Fig 8(b). **[7]**

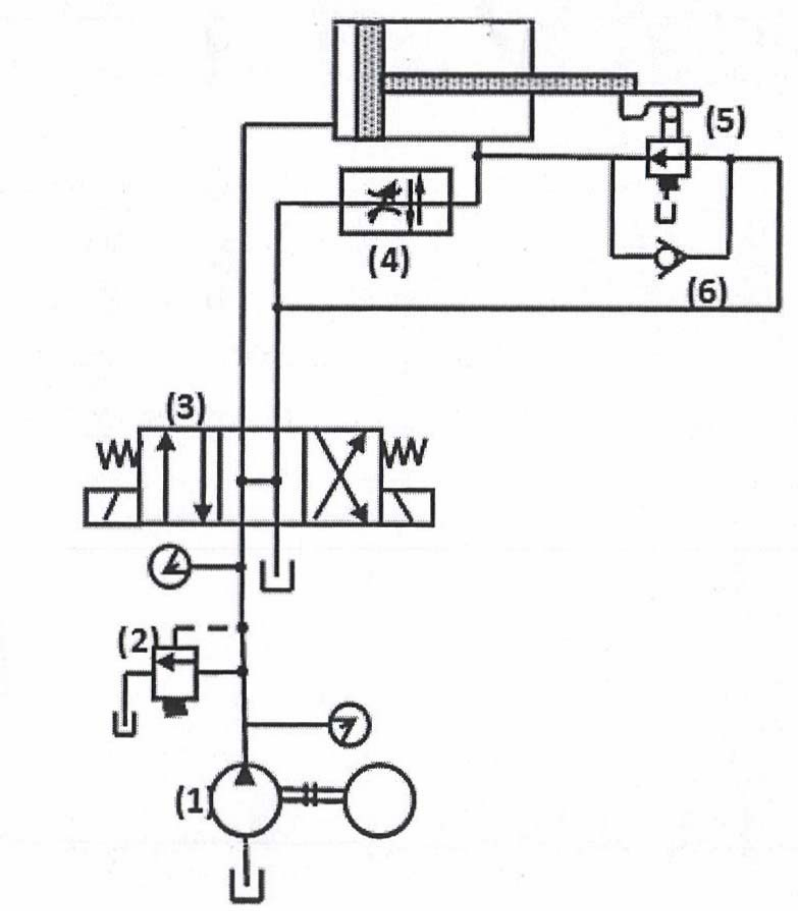

Fig. 8 (b)

⌘⌘⌘

Total No. of Questions : 10]

SEAT No. :

P-9355

[Total No. of Pages : 3

[6181]-590

B.E. (Mechanical Sandwich)

ENERGY AUDIT AND MANAGEMENT

(2015 Course) (Semester - II) (Elective - II) (402069A)

Time : 2½ Hours] *[Max. Marks : 70*

Instructions to the candidates :

1) ***Solve Q.1 or Q.2, Q.3 or Q.4, Q.5 or Q.6, Q.7 or Q.8 and Q.9 or Q.10.***
2) ***Neat diagrams must be drawn wherever necessary.***
3) ***Figures to the right indicate full marks.***
4) ***Use of electronic pocket calculator is allowed.***
5) ***Assume suitable data, if necessary.***

Q1) a) Write Short note on : **[6]**

i) Renewable and Non-Renewable energy consumption.

ii) Primary energy consumption and final Energy consumption.

b) Explain Preliminary energy audit and its importance? **[4]**

OR

Q2) a) Explain analysis and recommendation phase of energy audit with example? **[6]**

b) Explain electrical instrument used for energy Audit with their application? **[4]**

Q3) a) A company borrows Rs: 30,00,000 to finance a new boiler installation. If the interest rate is 12% per annum and the repayment period is 6 years. Calculate the value of total repayment and monthly repayment valve for **[6]**

i) Simple interest

ii) Compound interest

b) A Sum of Rs. 40,000 is deposited in a bank at the beginning of a year. The bank pays 8% interest annually. How much money will be in bank account at the end of sixth year, if no money is withdrawn? **[4]**

OR

P.T.O.

Q4) a) An economiser cost Rs: 2,00,000 and will last for 10 years. It will generate a saving of Rs: 35,000 per year with a maintenance cost of Rs: 5,000 per year. The discount rate is 10% and salvage value is Rs: 5,000 at the end of 10 years. Is the proposal attractive by NPV method? **[6]**

b) What is sensitivity analysis? List different factors considered for sensitivity analysis. **[4]**

Q5) a) Explain different efficient steam distribution system? **[8]**

b) What are the different opportunities for saving energy in central chilled water plant? **[8]**

OR

Q6) a) Find out the efficiency of the boiler by direct method with the data given below. **[8]**

i) Type of Boiler : Coal fired

ii) Quantity of steam (dry) generated: 12 TPH

iii) Steam pressure (gauge)/temp:10 bar(g)

iv) Quantity of steam consumed: 2.1 TPH

v) Feed water temperature: 75ºC

vi) Gross calorific value of coal: 18000kJ/kg.

vii) Enthalpy of saturated steam at 10.2 bar (g), pressure (g):2780 kJ/kg.

viii) Enthalpy of feed water : 320 kJ/kg.

b) Explain Indirect method of performance evaluation of a furnace with their advantages and disadvantages. **[8]**

Q7) a) Explain the types of lamp used in lighting system? Write down their feature with typical application. **[8]**

b) Explain power factor and explain how power factor improved with one example? **[8]**

OR

Q8) a) Explain electrical billing tariff structure for an industrial consumer. **[6]**

b) List the type of motors and explain different losses occurring in electrical motor. **[10]**

Q9) a) Explain the topping cycle and the bottoming cycle with sketch. **[8]**

b) Explain the concept of co-generation and its potential benefit with neat sketch. **[6]**

c) Explain short note on: **[4]**

i) Heat pipe and its application

ii) Recuperators

OR

Q10) a) What are direct and indirect benefits of waste heat recovery plant? **[8]**

b) Write short note on CDM projects. **[6]**

c) Write short note on : Carbon credit. **[4]**

▽▽▽▽

Total No. of Questions : 10]

SEAT No. : ____

P9356

[Total No. of Pages : 3

[6181]-591
B.E. (Honors)
SOFT COMPUTING AND DEEP LEARNING
(2015 Pattern) (Semester - II) (410303)

Time : 2½ Hours] ***[Max. Marks : 70***

Instructions to the candidates:

1) ***Answer Q.1 or Q.2, Q.3 or Q.4, Q.5 or Q.6 Q.7 or Q.8, Q.9 or Q.10.***
2) ***Neat diagrams must be drawn wherever necessary.***
3) ***Figures to the right indicate full marks.***
4) ***Assume suitable data, if necessary.***

Q1) a) Define Crisp and Fuzzy relation. Describe fuzzy max-min composition, fuzzy min-max composition and max-product composition. **[6]**

b) Define the following for membership functions: **[3]**

i) Core

ii) Support

iii) Boundary

OR

Q2) a) What is soft computing? Indicate biological analogies of basic techniques of soft computing. Describe why soft computing is particularly useful in representing and reasoning with human oriented knowledge. **[6]**

b) Differentiate Supervised Learning and unsupervised learning. **[3]**

Q3) a) Explain in detail Mamdani FIS. (Fuzzy Inference System) **[3]**

b) Explain fuzzification and defuzzification techniques. **[6]**

OR

Q4) a) Explain in detail convergence working principle in genetic algorithm. **[3]**

b) What is genetic programming? Write and explain the executional steps of Genetic Programming. **[6]**

P.T.O.

Q5) a) Explain in detail various Open Source Deep Learning Libraries and Platforms. **[6]**

b) What do you mean by Tensor in TensorFlow? What are the Programming elements of TensorFlow? **[6]**

c) Explain in detail Feed Forward Neural Network. **[4]**

OR

Q6) a) Explain working of Bayesian Neural Networks with suitable diagram. **[6]**

b) What is Neural Network? Explain with suitable diagram the different classes of network architecture. **[6]**

c) Explain the following terms: **[4]**

i) Theano in Deep Learning.

ii) Caffe in Deep Learning.

Q7) a) What is the role of the Activation functions in Neural Networks? Explain in detail some of the popular Activation Functions used in Neural Networks. **[8]**

b) What is pooling? What are the different types of Pooling? Explain their characteristics. **[6]**

c) What do you mean by Perceptron? Explain in detail different types of Perceptrons? **[4]**

OR

Q8) a) Explain with example Self Organizing Maps. **[8]**

b) What is a Deep Belief Network? How did Deep Belief Neural Networks Evolve? **[6]**

c) What is image captioning in Deep Learning? **[4]**

Q9) a) What is associate memory in neural network? Explain various types and applications of associative memory. **[8]**

b) Write short notes on: **[6]**

i) Artificial Neural Network (ANN)

ii) Application of RNN

c) Explain Adaptive Resonance Theory? What is the major difference between ART1 and ART2? **[4]**

OR

Q10)a) Explain following with example. **[8]**

i) Sequential processing LSTM

ii) Recurrent Neural Network (RNN)

b) Explain in detail architecture Convolution Neural Network (CNN). Write down various properties of CNN representations. **[6]**

c) Explain on detail Architecture of Back Propagation (BP) Networks. **[4]**

♦ ♦ ♦

Total No. of Questions : 8] **SEAT No. :**

P9357 **[Total No. of Pages : 2**

[6181]-592
B.E. (Computer Engineering) (Honors)
ARTIFICIAL INTELLIGENCE FOR BIG DATA ANALYTICS
(2015 Pattern) (Semester - II) (410503)

Time : 2½ Hours] ***[Max. Marks : 70***

Instructions to the candidates:

1) ***Answer Q.1 or Q.2, Q.3 or Q.4, Q.5 or Q.6 Q.7 or Q.8.***
2) ***Neat diagrams must be drawn wherever necessary.***
3) ***Figures to the right indicate full marks.***
4) ***Assume suitable data, if necessary.***

Q1) a) How does Text pre-processing work? **[6]**

b) Explain Data warehousing and mining? **[6]**

c) Explain Hadoop Ecosystem with a use case **[8]**

OR

Q2) a) Explain in brief general steps of image - pre processing. **[6]**

b) Explain difference between OLTP and OLAP. **[6]**

c) Explain different Hadoop Configuration files? What are the three modes in which Hadoop can run? **[8]**

Q3) a) Explain Data Ingestion. **[4]**

b) What is postagging? Explain using example. **[6]**

c) How to Apply basic statistical calculations using the Apache Spark RDD API in order to experience how parallelization in Apache Spark workes? **[8]**

OR

Q4) a) What is Big Data Analytics? **[4]**

b) Write a note on NLP techniques? **[6]**

c) Explain feature extraction in Natural language processing. **[8]**

P.T.O.

Q5) a) Explain "feature extraction in image" in computer vision. **[6]**

b) Explain features of spark MLlib library. **[6]**

c) Write note on Heuristic search techniques with examples. **[4]**

OR

Q6) a) Explain Data analytics with Hire with a example. **[6]**

b) Explain lemmatization in NLP. **[6]**

c) Explain the need of Artificial Intelligence. **[4]**

Q7) a) How would you prevent overfitting when designing an Artificial Neural Network? **[6]**

b) Does Gradient Descent always converge to an optimum? How do Gradient Descent Algorithms deal with the flat regions with desired points. **[6]**

c) Classify and discuss supervised and unsupervised machine hearning. **[4]**

OR

Q8) a) Explain the Regression analysis with suitable example. **[6]**

b) Explain clustering and clustering methods. **[6]**

c) Write note on greedy search technique. **[4]**



Total No. of Questions : 08]

SEAT No. : ____

P-9358

[Total No. of Pages : 2

[6181]-593
B.E. (Computer Engineering) (Honors)
INTERNET OF THINGS SECURITY
(2015 Pattern) (Semester - II) (410603)

Time : 2½ Hours] ***[Max. Marks : 70***

Instructions to the candidates :

1) ***Answer Q1 or Q2, Q3 or Q4, Q5 or Q6, Q7or Q8.***
2) ***Draw neat diagram wherever necessary.***
3) ***Figures to the right indicate full marks.***
4) ***Assume suitagble data if necessary.***

Q1) a) Elaborate basic security goals and attack techniques in IoT. **[6]**

b) How AES can be used in IoT node authentication? **[6]**

c) Why RSA is not a good choice for node authentication in IoT compared to symmetric key and ECC algorithm? Justify with comparison. **[6]**

OR

Q2) a) List different protocols developed for IP connectivity at different layers of IoT. Explain certificate based DTLS handshake procedure with neat diagram. **[6]**

b) What is lightweight cryptography? Name any two lightweight cryptography algorithms. Explain the significance of lightweight cryptography in IoT.**[6]**

c) Draw general structure of IoT system and explain how digital signature can be used to maintain integrity and authenticity of digital contents. **[6]**

Q3) a) Draw and explain the generic SOA architecture for IoT environment. Explain the security concerns to be considered in this architecture. **[10]**

b) Explain the data life cycle in IoT. How can we protect data in IoT? **[6]**

OR

Q4) a) Elaborate the security concerns, threats and protection at sensing layer and network - layer of SoA architecture for IoT environment. **[10]**

b) Write a short note on IoT security for machine learning applications. **[6]**

P.T.O.

Q5) a) Explain security issues in integration of RFID and WSN. Explain any four security schemes to protect information in WSN. **[6]**

b) List and explain main potential attacks in 6LoWPAN. Discuss security protocols and privacy issues in 6LoWPAN. **[6]**

c) How Denial of Service (DoS) attack threatens the IoT based healthcare applications? Suggest countermeasures to avoid these threats. **[6]**

OR

Q6) a) List multiple systems/devices involved in identification and tracking technologies of IoT environment. Discuss threats and challenges to achieve security in these systems. **[6]**

b) Explain different security concerns in Social IoT(SIoT). **[6]**

c) Discuss multiple security challenges of RFID. Suggest the different security controls for the same. **[6]**

Q7) a) Explain different characteristics of smart city. Provide IoT-based solution for "smart home" use case. **[10]**

b) Draw and explain the system model for Intelligent Traffic system. List different devices/components used in this system. **[8]**

OR

Q8) a) List and explain various challenges associated with secure IoT deployment and Blockchain for IoT. **[6]**

b) Provide IoT-based solution for connected cars. **[6]**

c) Briefly discuss the case study on "Smart electric vehicle scheduling". **[6]**