Enrollment No./Seat No.:

GUJARAT TECHNOLOGICAL UNIVERSITY

Bachelor of Engineering - SEMESTER - VII EXAMINATION - WINTER 2025

Subject Code: 3174017 **Date: 24-11-2025**

Subject Name: Professional Practice and Valuation of Infrastructure

Time: 10:30 AM TO 01:00 PM **Total Marks: 70**

Instructions

1. **Attempt all questions.**
2. **Make suitable assumptions wherever necessary.**
3. **Figures to the right indicate full marks.**
4. **Simple and non-programmable scientific calculators are allowed.**

			Marks
Q.1	**(a)**	List and describe the rules of deductions made for openings while estimating 12 mm plastering and pointing work.	**03**
	(b)	Estimate the 12mm thick 1:6 cement sand mortar plastering on inside walls and ceiling quantities for the load bearing structure show in Figure-1. (Note: All dimensions in meters and it is not to scale drawing).	**04**

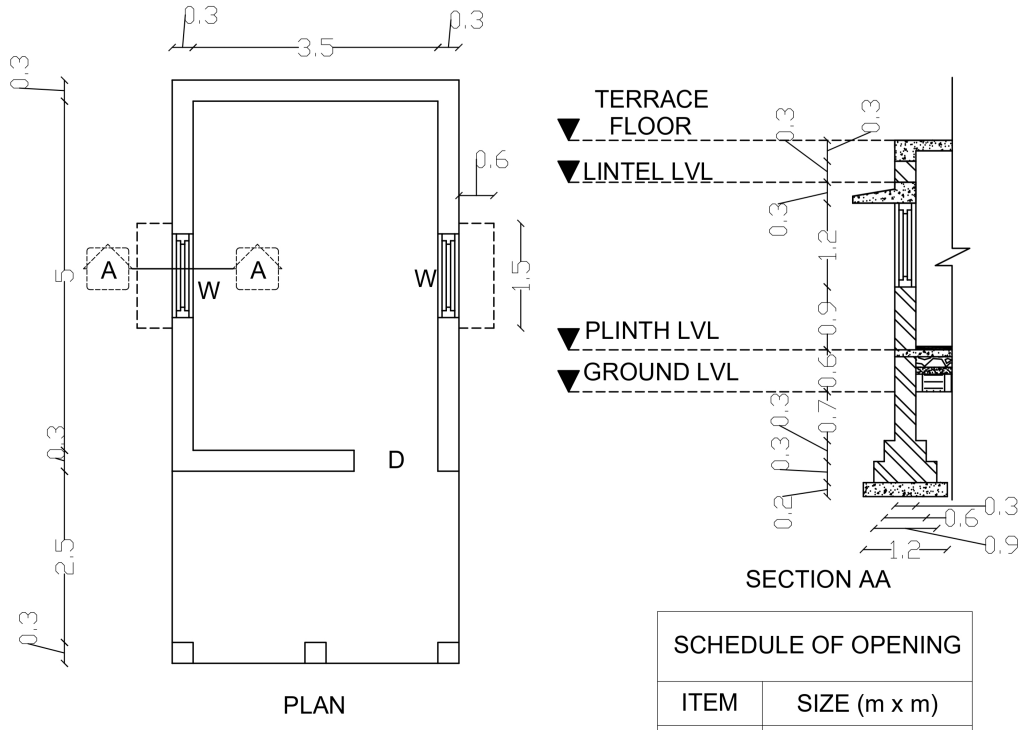

SCHEDULE OF OPENING	
ITEM	SIZE (m x m)
D	1.2 x 2.1
W	1.2 x 1.2

Figure 1

(c) Estimate the quantity and prepare the bar bending scheduling for the column shown in Figure 2. Consider 25 mm cover at all the sides and bottom. **07**

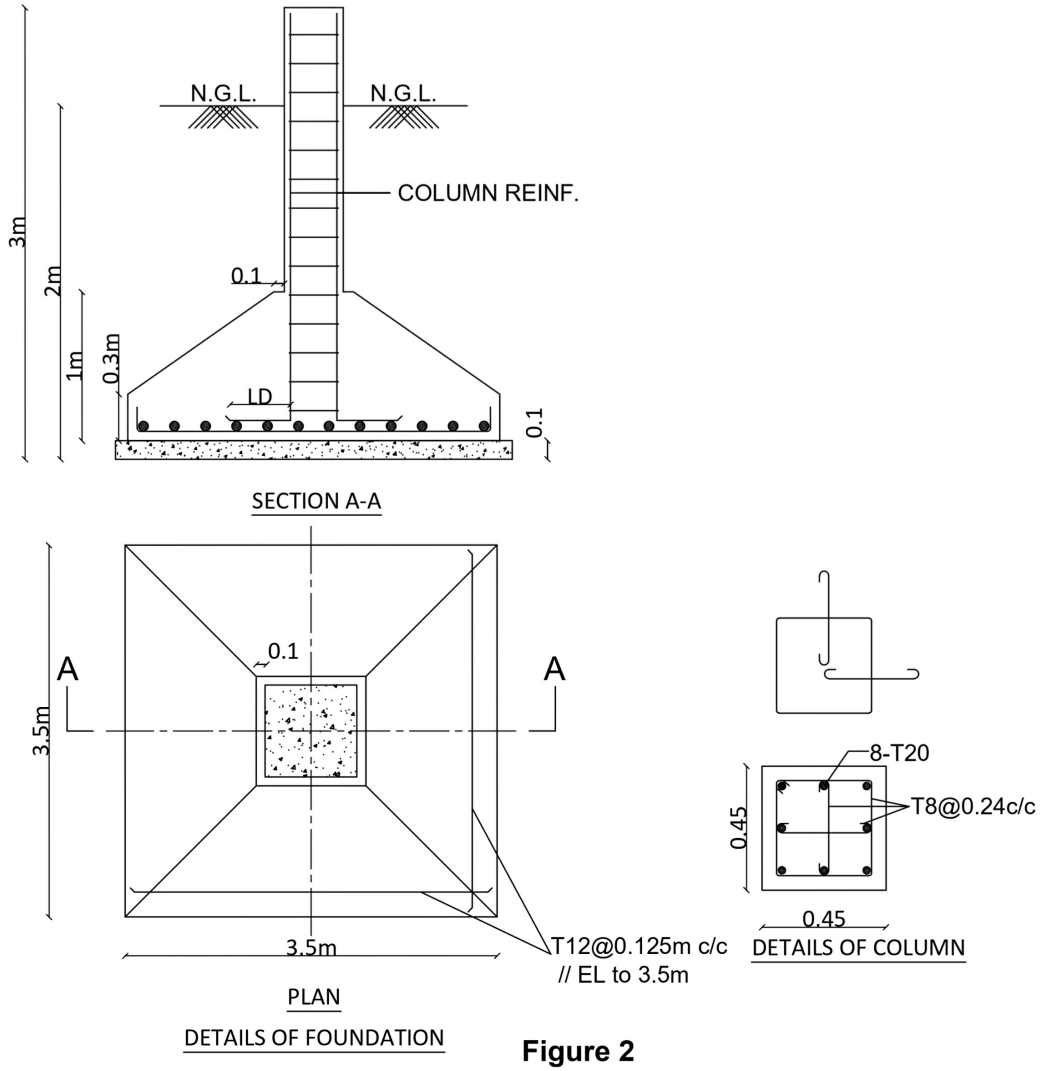

Figure 2

Q.2 **(a)** Distinguish between international system of unit (SI unit) and traditional metric system (MKSA). **03**

(b) Estimate the quantity of brickwork in 1:6 cement sand mortar for superstructure for the load bearing structure shown in Figure 1. (Note: All dimensions in meters and it is not to scale drawing) **04**

(c) Estimate the quantity of brickwork in 1:6 cement sand mortar in foundation and plinth for the load bearing structure shown in Figure 1. (Note: All dimensions in meters and it is not to scale drawing). **07**

OR

(c) Estimate the quantity and prepare the bar bending scheduling for the footing shown in Figure 2. Consider 40mm cover at all the sides and bottom. (Note: All dimensions in meters and is not to scale drawing). **07**

Q.3 **(a)** Enlist types of estimates and explain plinth area estimate with a suitable example. **03**

(b) Analyze and prepare a preliminary estimate of a building project with a total plinth area of building of 1500 sqm. Assume plinth area rate Rs. 950 sqm, special architecture treatment 1.5% of the building cost, water supply and sanitary installation 5% cost of building cost, internal installations 14% of the building cost, extra services 6% of building cost, contingencies 3%, and suppervision charges 8%. **04**

(c) Develop a detail specification for I-class brickwork in superstructure. **07**

OR

(a) Outline some typical causes of dispute in construction project. **03**

(b) In a letter dated June 30, 2023, a contractor makes a claim for ₹6 lakh of additional work in dewatering of foundations, resulting from unforeseen rains in the month of May and the item not being provided for in the contract. The details of the rainfall and the costs incurred in terms of manpower, equipment, power consumption, overtime payments made, etc., are annexed to the claim along with photographs. In a letter dated July 13, 2025, the owners acknowledge the receipt of the aforesaid letter from the contractor, and inform the contractor of the owners' decision to: (i) impose liquidated damage (LD) for delay of work. (ii) recover 4 lakh toward LD in the next running bill. Does the matter define a dispute or claim and counterclaim? Summarize and conclude your answer for the given situation. **04**

(c) Reduce Level (R.L) of ground along the center line of a proposed road from chainage 10 to chainage 20 are given in Table 1. The formation level at the 10th chainage is 107m and the road is in falling gradient of 1 in 150 upto chainage 14 and then it changes to 1 in 100 falling gradient. Formation width of road is 10m and side slopes of banking are 2:1 (Horizontal:Vertical). The length of the chainage is 30m. Prepare an estimate of earthwork using mid-section area method. **07**

Table 1

Chainage	10	11	12	13	14	15	16	17	18	19	20
Distance (m)	100	130	160	190	220	250	280	310	340	370	400
R.L. of ground (m)	105.00	105.60	105.44	105.90	105.42	105.30	105.00	104.10	104.62	104.00	103.30

Q.4 **(a)** Illustrate the purpose of rate analysis. **03**

(b) Enlist the factors affecting the evaluation of rate analysis. **04**

(c) Create a typical tender notice to be given in the local newspaper for the construction of G+1 R.C.C. frame structure of a residential co-operative housing society worth Rs. 30,00,000/- **07**

OR

(a) Illustrate the purpose of specification. **03**

(b) Enlist the importance of specification. **04**

(c) Formulate the rate analysis for 20 mm thick plaster work for a masonry wall in cement mortar 1:3. **07**

Q.5 **(a)** A pumping set with motor has been installed in a building at a cost of Rs. 2500. Assuming the life of the pump as 15 years. Calculate the annual installment of sinking fund required to be deposited to accumulate the whole amount of 4% compound interest. **03**

(b) Distinguish between market value and book value **04**

(c) A government accommodation is to built at the cost of Rs. 6,00,000/-. The water supply and electrical installation expenditure is Rs. 1,50,000/-. Evaluate the standard rent of the building if the following rate of return are fixed: (i) 6% on construction cost. (ii) 1.5 % towards maintenance of building work. (iii) 4.5 % on installation expenditure. (iv) 4 % on maintenance of installation. (v) Rs. 1200/- as property tax per year. (vi) Cost of land is to be neglected. **07**

OR

(a) Examine the value of the "year's purchase" and "Modified year's purchase" for a property if its life is 50 years and the rate of interest is 8%. For a sinking fund, the rate of interest is 4%. **03**

(b) Distinguish between scrap value and salvage value. **04**

(c) A three-story building is standing on a land measuring 100 sqm. The plinth area of each story is 50 sqm. The building is an R.C.C. framed structure and the utility period of the building may be taken as 80 years. The building fetches a gross rent of Rs. 15,000 per month. Evaluate the capitalized value of the property on the basis of a 8% net yield. For sinking funds, 4% compound interest may be assumed. The cost of land may be taken at Rs. 10,000 per sqm and the cost of the building may be taken at Rs. 15,000 per sqm of plinth area. Total outgoing may be assumed to be Rs. 50,000 per year. **07**

***