Enrolment No./Seat No_____

GUJARAT TECHNOLOGICAL UNIVERSITY

BE - SEMESTER–III EXAMINATION – SUMMER 2025

Subject Code:3130305 **Date:31-05-2025**

Subject Name: Advanced Electronics

Time:02:30 PM TO 05:00 PM **Total Marks:70**

Instructions:

1. **Attempt all questions.**
2. **Make suitable assumptions wherever necessary.**
3. **Figures to the right indicate full marks.**
4. **Simple and non-programmable scientific calculators are allowed.**

			MARKS
Q.1	**(a)**	Draw & explain CB transistor configuration.	**03**
	(b)	Enlist types of Relays. Explain anyone.	**04**
	(c)	Design fixed voltage multiple output Power supply with ±5V, ±9V, ±12V output. Mention all component values.	**07**
Q.2	**(a)**	Enlist applications of Relays.	**03**
	(b)	Explain types of IC voltage regulators.	**04**
	(c)	What is an Op-amp? Draw and explain the basic building blocks of an op-amp.	**07**
		OR	
	(c)	Explain Voltage to Current convertor and derive the equation for output current.	**07**
Q.3	**(a)**	Design close loop differential amplifier with gain of -10.	**03**
	(b)	If funity is 1MHz, find A_v, f_2, f_{C1}, f_{C2} for following circuit.	**04**

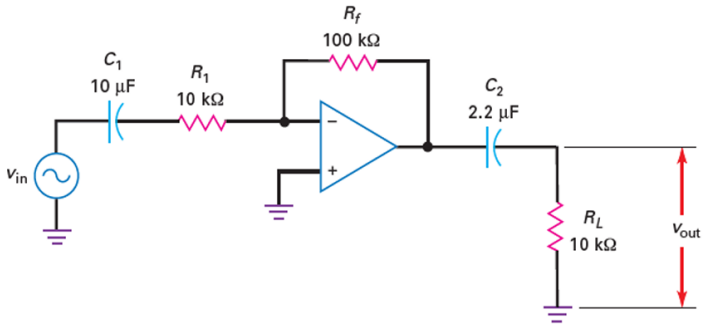

	(c)	Design Summing, Scaling & Averaging amplifier and derive the equation for output voltage.	**07**
		OR	
Q.3	**(a)**	Draw practical integrator circuit and write output voltage equation.	**03**
	(b)	Design Instrumentation Amplifier with gain of 10000 using 3 op-amp.	**04**
	(c)	What is Guard Driving? Explain guard driving with AD620.	**07**
Q.4	**(a)**	What is Noise? Enlist types of Noise sources in op-amps & explain anyone.	**03**
	(b)	Design 60 Hz active Notch filter. (C=1µF)	**04**
	(c)	Design wide band-pass filter with f_L=200Hz, f_H=1kHz & passband gain=4.	**07**
		OR	
Q.4	**(a)**	Draw Ideal and Approximate response of different types of filters.	**03**
	(b)	What is Oscillator? Enlist types of oscillators.	**04**
	(c)	Describe working of Square wave generator with necessary diagram.	**07**

Q.5	**(a)**	Explain operation of Class-B amplifier.	**03**
	(b)	Describe Gate Triggering of SCR.	**04**
	(c)	Explain 555 Timer circuit as Astable multivibrator.	**07**

OR

Q.5	**(a)**	Illustrate basic construction & operation of DIAC.	**03**
	(b)	Explain Class-AB push-pull operation.	**04**
	(c)	Explain basic construction, operation and VI characteristics of Shockley Diode.	**07**

****