A

Series

A

CODE : 15

Write here Roll Number and Answer Sheet No.

Question Booklet Sl. No.

Roll No.

Answer Sheet No.

Duration : 1 Hour

Total Marks : 100

Declaration by Invigilator :
I Certify that I have checked that the Roll Number and the Answer Sheet Number written by the Candidate on the question paper and the OMR Sheet are correct and the Answer Sheet Number matches the Question Booklet Number exactly.

Signature of the Invigilator with Name

Declaration by andidate :
I undertake not to employ any unfair means in this exam. I have checked the Question Booklet Number and the Answer Sheet Number and both are identical and have been correctly entered by me wherever indicated.

Signature of the Candidate with Name

Read the following instructions carefully before you begin to answer the questions.

IMPORTANT INSTRUCTIONS TO CANDIDATES

A

1. The Roll No. is a **7** digit No., the candidate needs to circle the Roll No. in the Answer Sheet.
2. The appropriate Circle should be shaded for Roll No. This should be done carefully because only the shaded circles are scanned.
3. Valuation of Answer Sheet will be done on the computer. Candidate should not make any stray marks on the Answer Sheet, tamper with or mutilate it. Otherwise it will not be evaluated.
4. Please check all the pages of the Booklet carefully. In case of any defect, please ask the Invigilator for replacement of the Booklet.
5. You must not tear off or remove any sheet from this Booklet. The Answer Sheet must be handed over to the Invigilator before you leave the Examination Hall.
6. All questions are compulsory and each Question carries **2** marks.
7. **The paper carries negative marking. For each wrong answer 0.50 mark will be deducted.**
8. This Booklet contains 50 questions.
9. Use of Calculator/Palmtop/Laptop/Other Digital Instrument/Mobile/Cell Phone/Pager is **not** allowed.
10. Candidates found guilty of misconduct/using unfair means in the Examination Hall will be liable for appropriate penal/legal action.
11. **No Rough Work is to be done on the Answer Sheet and only single OMR Answer Sheet will be provided.**
12. This booklet contains **12** pages.
13. **Directions** : Each question or incomplete statement is followed by four alternative suggested answers or completions. In each case, you are required to select the one that correctly answers the question or completes the statement and blacken (●) appropriate circle a, b, c or d by Blue / Black Ball-Point Pen provided by the board against the question concerned in the Answer Sheet.
14. Mark your answer by shading the appropriate circle against each question. The circle should be shaded completely without leaving any space. The correct method of shading is given below.

Wrong Method	Wrong Method	Wrong Method	Correct Method
○ ⊗ ○ ○	○ ⊘ ○ ○	○ ◉ ○ ○	○ ● ○ ○

The Candidate must mark his/her response after careful consideration, as it is not possible to change the response once it is marked.

15. There is only one correct answer to each question. You should blacken (●) the circle of the appropriate column, viz., a, b, c or d. If you blacken (●) more than one circle against any one question, the answer will be treated as wrong.
16. Use the space for rough work given at the beginning of the Question Booklet only and not on the Answer Sheet.
17. **You are NOT required to mark your answers in this Booklet. All answers must be indicated in the Answer Sheet only.**

DO NOT WRITE HERE

SPACE OR ROUGH WORK

SPACE OR ROUGH WORK

1. The practical voltage source has emf of E volts and internal resistance is r ohms. If it supplies a load current of I amperes, the terminal voltage is
   (a) E (b) E/r
   (c) Ir (d) E – Ir

2. The direction of force in a motor is determined by
   (a) Fleming's right hand rule (b) Fleming's left hand rule
   (c) End rule (d) Right hand thumb rule

3. An energy meter is _____ instrument.
   (a) Recording (b) Indicating
   (c) Integrating (d) None of these

4. In a dynamometer wattmeter, the fixed coil is
   (a) C rrent coil (b) Potential coil
   (c) Voltage coil (d) Resistance coil

5. The equation of an alternating current is given by i = 42.42sin628t. Frequency of the current is
   (a) 42.42 Hz (b) 100 Hz
   (c) 628 Hz (d) 30 Hz

6. For a 'P' pole lap wound armature of DC machine the number of parallel paths are equal to
   (a) 2 (b) 2P
   (c) P (d) P/2

7. What is the power factor in the case of two wattmeter method of measuring three phase power if wattmeter reading are equal and opposite ?
   (a) 1 (b) 0
   (c) 0.866 (d) 0.5

8. The top and bottom horizontal portion of the transformer core is
   (a) Limb (b) Yoke
   (c) Winding (d) onservator

9. A transformer operates at maximum efficiency when
   (a) Core losses minimum (b) Iron losses minimum
   (c) Copper losses minimum (d) Copper losses = Iron losses

10. Identify the following electronic circuit

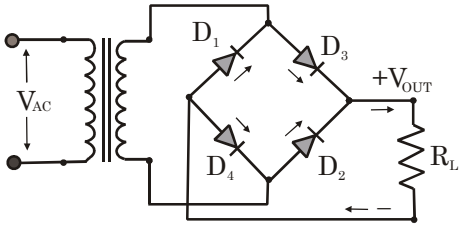

(a) Half wave rectifier
(b) Full wave rectifier
(c) Bridge rectifier
(d) Zener voltage regulator

11. How much current flows in the filament of a 300-W bulb connected to the 120-V power line ?

(a) 500 mA
(b) 1A
(c) 2.5A
(d)

12. The current in an open circuit is

(a) Normally very high because the resistance of an open circuit is 0 ohm
(b) Usually high enough to blow the circuit fuse
(c) Zero
(d) Slightly below normal

13. A 6 pole induction motor supplied by a 10 pole alternator which is driven at 600 rpm. If the motor is running at 970 rpm, determine the percentage slip

(a) 1%
(b) 2%
(c) 3%
(d) 5

14. type of protection which depends on only the magnitude of the current without taking any cognizance of its phase angle is known as

(a) Over current protection
(b) Directional over current protection
(c) Non-directional over current protection
(d) Directional under current protection

15. Which of the following is not a class of permanent magnet material used for electric machines ?

(a) Alnicos
(b) eramics
(c) Silicon
(d) Samarium cobalt

16. Which of the following is not a mode of heat transfer ?
(a) Conduction (b) Insulation
(c) Convection (d) Radiation

17. andle power can be measured with the help of which of the following instrument ?
(a) Ammeter (b) Voltmeter
(c) Diameter (d) Photometer

18. Which among the following is an example of secondary cell ?
(a) Wet cell (b) Dry cell
(c) Leclanche cell (d) lkaline cell

19. In a battery, when the particles deposited on the positive plate dissolves in the electrolyte, short circuit may occur. This is called
(a) Sedimentation (b) Sulphation
(c) Plate buckling (d) None of the above

20. _____ measures the insulation resistance of a coil.
(a) Ohm-meter (b) Voltmeter
(c) Meggar (d) Shunt type ohm-meter

21. In a PN junction, the current produced by the effect of movement of charge carriers when an electric pulse is applied
(a) iffusion current (b) Drift current
(c) raft current (d) None of these

22. Noise arising in IC amplifiers is generally described by
(a) Single source input model (b) Single source output model
(c) Two source input model (d) Two source output model

23. The depletion mode MOSFET is equivalent to a _____ switch.
(a) Normally open (b) Normally close
(c) Always open (d) Neither open, nor close

24. 6 ohm and 4 ohm resistors are connected in parallel through 240V supply. Total current flowing through the circuit is
(a) 10 A b) 100 A
(c) 1000 A (d) 24 A

25. luminium Borate is used as the dielectric medium in which of the following type of capacitors ?

(a) Ceramic capacitor (b) Mica capacitor
(c) Paper capacitor (d) Electrolytic capacitor

26. In which of the following types of machines, electric energy is converted into electromagnetic energy ?

(a) Lamp (b) Heater
(c) Telegraphic machine (d) Electric bell

27. The ampere-hour efficiency of a lead acid cell is normally between

(a) 20-25% b) 40-50%
(c) 60-65% (d) 90-95%

28. In DC generators, the effect of the magnetic field set up by the armature current on the distribution of the flux under main poles is known as

(a) Armature resistance (b) Armature effect
(c) Armature reaction (d) None of these

29. Hysteresis loss is a type of

(a) Copper loss (b) Iron loss
(c) Mechanical loss (d) Friction loss

30. For all practical purposes, potential of earth is taken as

(a) Infinity (b) Zero
(c) One (d) None of these

31. Magnetization current in a transformer produces _____ in transformer core.

(a) Eddy current (b) Flux
(c) Power (d) None of these

32. In a diode, flow of current is

(a) Unidirectional (b) Bidirectional
(c) Reverse (d) None of these

33. Unknown frequency can be measured using

(a) nderson's bridge (b) Maxwell's bridge
(c) De Sauty's bridge (d) Wien's bridge

34. Following circuit shows a _____ instrument used to measure medium resistance.

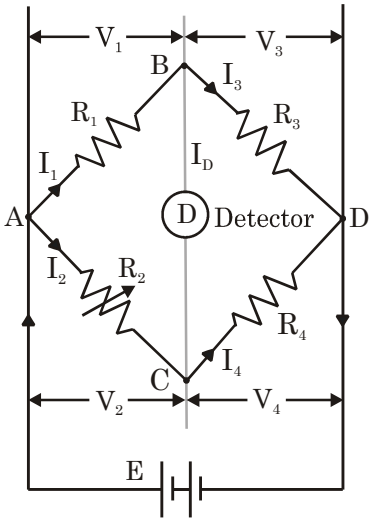

(a) Ohm-meter (b) Voltmeter

(c) Wheatstone bridge (d Kelvin bridge

35. apacitance is a ratio of

(a) Voltage to voltage (b) Voltage to charge

(c) Charge to voltage (d) Charge to charge

36. The _____ is a discharge of electricity through a combination of ionized air and vaporized conductor material.

(a) Fuse (b) Power arc

(c) MCB (d) None of these

37. _____ is defined as the amount of luminous flux given out in a space represented by one unit solid angle by a source having an intensity of one candle power in all directions.

(a) Luminous intensity (b) Lumen

(c) Light (d) Candela

38. The reciprocal of impedance of a circuit is called

(a) Resistance (b) Inductance

(c) Capacitance (d) Admittance

39. In 4 point starter, the No Volt Release(NVR) coil is connected
(a) To the field circuit
(b) To the armature circuit
(c) Across the supply line through a protective resistance
(d) Both (a) and (b)

40. Figure shows an armature rotating in two-pole machine. Consider a small piece ab of the armature. When the piece ab is under N-pole, the magnetic lines pass from a to b Half a revolution later, the same piece of iron is under S-pole and magnetic lines pass from b to a so that magnetism in the iron is reversed. In order to reverse continuously the molecular magnets in the armature core, some amount of power has to be spent which is called

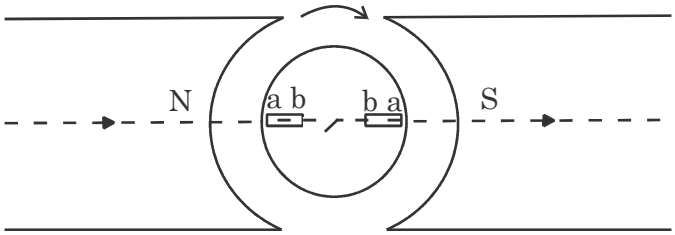

(a) Eddy current loss
(b) Voltage loss
(c) Hysteresis loss
(d) Mechanical loss

41. 3 similar impedances are connected in delta across a 3 phase supply. The two wattmeters connected to measure the input power indicate 12 kW and 7 kW. Power factor of the load is
(a) 0.9899
(b) 0.9099
(c) 0.9999
(d) 0.9393

42. In measuring instruments, under equilibrium condition, controlling torque(T_c) and deflecting torque (T_d) are
(a) $T_c = T_d$
(b) $T_c > T_d$
(c) $T_c < T_d$
(d) None of these

43. _____ filter attenuates a certain band of frequencies between two corner frequencies while allowing all those outside of this corner.
(a) Low pass
(b) High pass
(c) Band pass
(d) Band stop

44. Fuse is always connected in _____ of the circuit.
(a) Parallel
(b) Neutral
(c) Series
(d) No such specification

45. An ac current is represented as 42.42sin628t. RMS value of current and frequency are respectively
(a) 141.2A, 31 Hz
(b) 200A, 200Hz
(c) 10A, 5 Hz
(d) 30A, 1 Hz

46. Nature of power factor is determined by
(a) Voltage current ratio
(b) Series connection of impedance
(c) Parallel connection of impedance
(d) Position of current with respect to voltage

47. 2 issimilar charges have a difference of potential and the unit of potential difference is
(a) Ampere
(b) Newton
(c) Joule
(d) Volt

48. In a 6 phase supply system, the voltages are separated from each other by
(a) 120 degrees
(b) 90 degrees
(c) 180 degrees
(d) 60 degrees

49. In delta connected system, the relation between the line current I_L and phase current I_{ph} is
(a) $I_L = I_{ph}$
(b) $I_L = I_{ph}/\sqrt{3}$
(c) $I_L = \sqrt{3}I_{ph}$
(d) $I_L = 3I_{ph}$

50. A 3 phase, 16 pole alternator has a star connected winding with 144 slots and 10 conductors per slot. Number of conductors per phase is
(a) 144
(b) 1440
(c) 480
(d) 48

